MITSUBISHI HEAVY INDUSTRIES

MOVE THE WORLD FORWARD MITSUBISHI HEAVY INDUSTRIES GROUP

# Residential Air Conditioners SR series

# Leading energy efficiency and high reliability

*with Mitsubishi Heavy Industries advanced technology.*

## Residential Air Conditioners

What solutions can a Mitsubishi Heavy Industries Air Conditioner offer?

- **Keep comfortable with quick cool-down/warm-up**
- **Energy saving for a sustainable society**
- **Stylish design suitable for all interiors**
- **Reliable air conditioner for long term use**

Mitsubishi Heavy Industries advanced technology can provide a variety of solutions.

### *Elegant Timeless Design*

The ZSX/ZS and ZTL series air conditioners have been stylishly designed with rounded contours that fit beautifully into Europe's diverse interior.

ZSX series

### *Quiet and Comfortable*

Mitsubishi Heavy Industries Thermal Systems offers a unique modest air conditioner; quiet and comfortable which provides precise air flow and capacity control.

### *Energy Saving*

High energy saving with comfort. Provides the user multiple solutions in comfort and energy savings.
All the models can achieve high energy efficiency by use of Mitsubishi Heavy Industries technology, such as high performance compressor, DC PAM inverter technology.

**Design award for Mitsubishi Heavy Industries SRK-ZSX air conditioning unit**

Mitsubishi Heavy Industries has been awarded the 2017 Silver A' Design Award in the 'Engineering and Technical Design' category for its SRK-ZSX Diamond Series air conditioning unit. It was created to meet the demanding expectations of the European air conditioning market.

## *Convenience*

Control your air conditioner from anywhere, anytime with the optional Wireless Control System.

# CONTENTS


| | |
|---|---|
| **- INTRODUCTION** | **2** |
| **- PRODUCT LINE UP** | **4** |
| **- NEXT GENERATION REFRIGERANT R32** | **8** |
| **- ADVANCED TECHNOLOGY** | **10** |
| **- FUNCTIONS** | **20** |
| **- SINGLE-SPLIT** | **22** |
| - WALL MOUNTED TYPE | **22~28, 32~35** |
| - FLOOR STANDING TYPE | **29, 36** |
| - CEILING CONCEALED TYPE | **30, 37** |
| - 4WAY CEILING CASSETTE TYPE | **31, 38** |
| **- MULTI-SPLIT SYSTEM** | **39** |
| **- CONTROL SYSTEM** | **104** |
| **- DIMENSIONS** | **106** |
| **- ENERGY EFFICIENT AND ENVIRONMENTALLY CONSCIOUS** | **114** |

# PRODUCT LINE UP

■ SINGLE-SPLIT

| | Model | | Capacity Range (kW : Rated cooling capacity) | | | | | | | | | | |
|---|---|---|---|---|---|---|---|---|---|---|---|---|---|
| | | | 2.0 | 2.5 | 3.5 | 4.0 | 4.5 | 5.0 | 6.0 | 6.3 | 7.1 | 8.0 | 10.0 |
| WALL MOUNTED TYPE | Diamond Series SRK-ZSX-W,-S | R32 P.22 | ● A+++ | ● A+++ | ● A+++ | | | ● A++ | ● A++ | | | | |
| | | R410A P.32 | ● A+++ | ● A+++ | ● A+++ | | | ● A++ | ● A++ | | | | |
| | Diamond Series SRK-ZR-W,-S | R32 P.24 | | | | | | | | ● A++ | ● A++ | ● A++ | ● A++ |
| | | R410A P.33 | | | | | | | | ● A++ | ● A++ | ● A++ | ● A++ |
| | Premium Series SRK-ZS-W,-S | R32 P.25 | ● A+++ | ● A+++ | ● A++ | | | ● A++ | | | | | |
| | | R410A P.34 | ● A++ | ● A++ | ● A++ | | | ● A++ | | | | | |
| | Standard PlusSeries SRK-ZTL-W New! | R32 P.26 | Coming soon (1.5kW,2.0kW,2.5kW,3.5kW,5.0kW) | | | | | | | ● A++ | ● A++ | | |
| | Standard Series SRK-ZSP-W,-S | R32 P.28 | | ● A++ | ● A++ | | ● A++ | ● A++ | | | | | |
| | | R410A P.35 | | ● A | ● A++ | | ● A | | | | | | |
| FLOOR STANDING TYPE | SRF-ZS-W SRF-ZSX-W | R32 P.29 | | ● A++ | ● A++ | | | ● A++ | | | | | |
| | SRF-ZMX-S | R410A P.36 | | ● A++ | ● A++ | | | ● A++ | | | | | |
| CEILING CONCEALED TYPE | SRR-ZS-W | R32 P.30 | | ● A++ | ● A++ | | | | | | | | |
| | SRR-ZM-S | R410A P.37 | | ● A++ | ● A++ | | | | | | | | |
| CEILING CASSETTE TYPE | FDTC-VH | R32 P.31 | | ● A++ | ● A++ | ● A++ | | ● A++ | ● A++ | | | | |
| | FDTC-VF | R410A P.38 | | ● A++ | ● A++ | ● A++ | | ● A+ | ● A+ | | | | |

## ZSX · ZS series colour variations available

Users can choose the model from three different colours allowing more choice depending on the style of the room.

ZSX series

Pure White Black & White Titanium

ZS series

Pure White Black & White Titanium

## ■ MULTI-SPLIT SYSTEM

| | | | SCM-ZS-W P.40 | | | | | | | SCM-ZS-S,ZM-S P.44 | | | | | | | |
|---|---|---|---|---|---|---|---|---|---|---|---|---|---|---|---|---|---|
| | **Model** (kW) | | 4.0 | 4.5 | 5.0 | 6.0 | 7.1 | 8.0 | 10.0 | 4.0 | 4.5 | 5.0 | 6.0 | 7.1 | 8.0 | 10.0 | 12.5 |
| | Number of connectable indoor units | | 2 | | 2 - 3 | | 2 - 4 | | 2 - 5 | 2 | | 2 - 3 | | 2 - 4 | | 4 - 5 | 4 - 6 |
| | Outdoor unit*1 | | A+++ | | A+++ | | A++ | | New! A+ | A++ | | A++ | | A++ | | A+ *2 | |
| | Indoor unit (kW) | | | | | | | | | | | | | | | | |
| WALL MOUNTED TYPE | **SRK-ZSX-W** *3 | 2.0 | ● | ● | ● | ● | ● | ● | ● | ● | ● | ● | ● | ● | ● | ● | ● |
| | | 2.5 | ● | ● | ● | ● | ● | ● | ● | ● | ● | ● | ● | ● | ● | ● | ● |
| | | 3.5 | ● | ● | ● | ● | ● | ● | ● | ● | ● | ● | ● | ● | ● | ● | ● |
| | | 5.0 | | | ● | ● | ● | ● | ● | | | ● | ● | ● | ● | ● | ● |
| | | 6.0 | | | | ● | ● | ● | ● | | | | ● | ● | ● | ● | ● |
| | **SRK-ZR-W**  | 7.1 | | | | | ● | ● | ● | | | | | | | ● | ● |
| | | 8.0 | | | | | | | ● | | | | | | | | |
| | **SRK-ZS-W** *3 | 2.0 | ● | ● | ● | ● | ● | ● | ● | ● | ● | ● | ● | ● | ● | ● | ● |
| | | 2.5 | ● | ● | ● | ● | ● | ● | ● | ● | ● | ● | ● | ● | ● | ● | ● |
| | | 3.5 | ● | ● | ● | ● | ● | ● | ● | ● | ● | ● | ● | ● | ● | ● | ● |
| | | 5.0 | | | ● | ● | ● | ● | ● | | | ● | ● | ● | ● | ● | ● |
| | **SKM-ZSP-W** | 2.0 | ● | ● | ● | ● | ● | ● | ● | ● | ● | ● | | | | | |
| | | 2.5 | ● | ● | ● | ● | ● | ● | ● | ● | ● | ● | | | | | |
| | | 3.5 | ● | ● | ● | ● | ● | ● | ● | ● | ● | ● | | | | | |
| FLOOR STANDING TYPE | **SRF-ZS(X)-W** | 2.5 | ● | ● | ● | ● | ● | ● | ● | ● | ● | ● | ● | ● | ● | ● | ● |
| | | 3.5 | ● | ● | ● | ● | ● | ● | ● | ● | ● | ● | ● | ● | ● | ● | ● |
| | | 5.0 | | | ● | ● | ● | ● | ● | | | ● | ● | ● | ● | ● | ● |
| CEILING CONCEALED TYPE | **SRR-ZS-W** | 2.5 | ● | ● | ● | ● | ● | ● | ● | ● | ● | ● | ● | ● | ● | ● | ● |
| | | 3.5 | ● | ● | ● | ● | ● | ● | ● | ● | ● | ● | ● | ● | ● | ● | ● |
| | | 5.0 | | | ● | ● | ● | ● | ● | | | ● | ● | ● | ● | ● | ● |
| | | 6.0 | | | | ● | ● | ● | ● | | | | ● | ● | ● | ● | ● |
| CEILING CASSETTE TYPE | **FDTC-VH** | 2.5 | ● | ● | ● | ● | ● | ● | ● | ● | ● | ● | ● | ● | ● | ● | ● |
| | | 3.5 | ● | ● | ● | ● | ● | ● | ● | ● | ● | ● | ● | ● | ● | ● | ● |
| | | 5.0 | | | ● | ● | ● | ● | ● | | | ● | ● | ● | ● | ● | ● |
| | | 6.0 | | | | ● | ● | ● | ● | | | | ● | ● | ● | ● | ● |
| DUCT CONNECTED TYPE | **FDUM-VH** | 5.0 | | | ● | ● | ● | ● | ● | | | ● | ● | ● | ● | ● | ● |
| CEILING SUSPENDED TYPE | **FDE-VH** | 5.0 | | | ● | ● | ● | ● | ● | | | ● | ● | ● | ● | ● | ● |

*1 Energy class depends on connected indoor units. *2 Energy label applies below cooling capacity 12kW. *3 Can be also connected colour variation type.

# New! *The newly developed ZTL series*

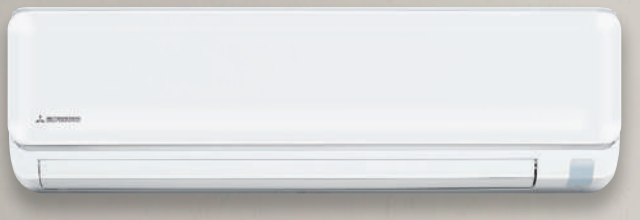

## SRK63ZTL-W

For more details go to P26 »

### Wireless Control System is now equipped as standard

Control your air conditioner from anywhere, anytime with the Wireless Control System.

# SRK71ZTL-W

For more details go to P26 »

## New remote control

1. Simple design and easy to use
2. Temperature controlled in 0.5 °C units
3. Easy to see with backlight

# NEXT GENERATION REFRIGERANT R32

## All series line up available for R32 refrigerant

R32 is the next generation refrigerant that boasts nearly 70% lower Global Warming Potential Rate than R410A. Due to its superior qualities, R32 offers amazing energy efficiency benefits.

## F-GAS REGULATION (EU) No 517/2014

- Introduced in January 2015 to regulate the use of Fluorinated Greenhouse Gases **(F-Gases)**
- The Hydrofluorocarbons (HFCs) are F-Gases used in the HVACR sector (Heating, Ventilation, Air Conditioning and Refrigeration)

HFCs Phase Down

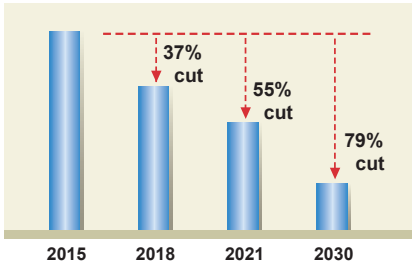


**OBJECTIVE**

- To protect the environment by reducing the F-Gases emissions

**IMPACT ON HFCs (in EU)**

- HFCs Phase Down
- HFCs Ban

**SOLUTIONS**

- Use lower GWP* refrigerants in new equipment
- Use high-efficiency equipment with less refrigerant charge
- Check refrigerant leaks regularly

* **GWP** is the Global Warming Potential of a refrigerant, representing how much heat an **F-Gas** traps in the atmosphere

**HFCs Ban**

**2020**

- GWP ≥ 150 — Portable room air conditioner
- GWP ≥ 2500 — Stationary refrigeration*1 (except < -50°C)
- GWP ≥ 2500 — Commercial hermetically sealed refrigerators, freezers

**2022**

- GWP ≥ 150 — Commercial multipack centralised refrigeration
- GWP ≥ 150 — Commercial hermetically sealed refrigerators, freezers

**2025**

- GWP ≥ 750 — Single Split Fixed Air Conditioning < 3kg HFC

LOWER GWP + LESS REFRIGERANT CHARGE = LOWER HFCs EMISSIONS

*1 Stationary refrigeration equipment, that contains or relies its functions upon, HFCs with GWP of 2500 or more except equipment intended for application designed to cool products to temperatures below -50°C application

## R32 - A Low GWP Refrigerant

- A single component, easy to handle refrigerant
- Known as a component of the blend R410A (50% R32, 50% R125)
- Already used in Air Conditioning systems worldwide
- Zero Ozone Depletion
- Superior Energy Efficiency vs. R410A
- Reduced refrigerant charge vs. R410A
- Easy to recycle

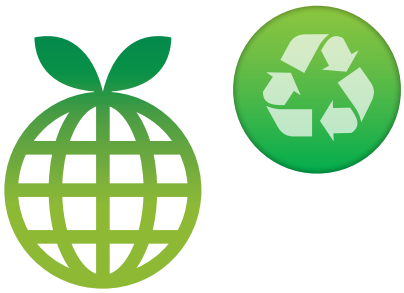

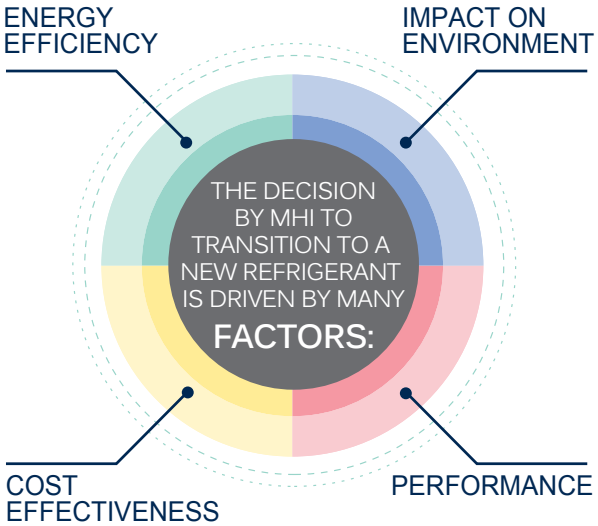


### Low Global Warming Potential

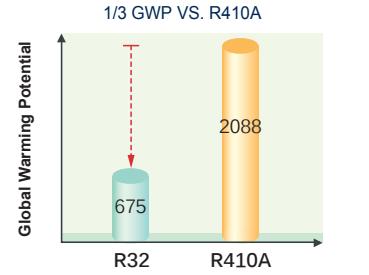


GWP Values based on IPCC 4th Assessment Report

### Superior Energy Efficiency

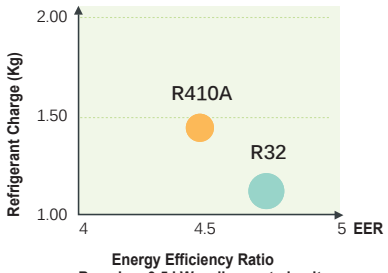


Energy Efficiency Ratio
Based on 3.5 kW wall mounted unit

### Reduced Refrigerant Charge

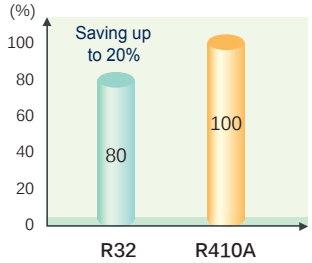


## Environmental

Mitsubishi Heavy Industries Thermal Systems are unswervingly dedicated to facing the challenges of the future.
Mitsubishi Heavy Industries Thermal Systems is dedicated to supporting global sustainability by offering the most energy-efficient air-conditioning systems. Through our in-depth research and development we are able to incorporate new technologies within our units to maximise their energy efficiency and significantly reduce carbon emissions.

### Environmental Impact

Mitsubishi Heavy Industries Thermal Systems recognises the importance of reducing carbon emission and selecting environmentally-friendly solutions.

The future of our planet rests in the sustained evolution of humankind while caring, with love and responsibility, for all life forms that inhabit it. Therefore Mitsubishi Heavy Industries Thermal Systems will continue to develop new technologies and products and will remain competitive in the market to achieve a sustainable future.

# ADVANCED TECHNOLOGY
## HIGH EFFICIENCY / HIGH TECHNOLOGIES

# Consideration for the Environment

Several radical design changes and engineering developments have brought about a vast improvement in energy efficiency and environmental protection.

## High Efficient Performance: Up to Class A$^{+++}$

Mitsubishi Heavy Industries Thermal Systems classes its entire range with seasonal domestic energy factors that display energy ratings from A$^{+}$ to A$^{+++}$.
Important energy savings in both cooling mode and heating are achieved thanks to its DC PAM Inverter technology and DC twin rotary compressor.
(ZSX series)

Higher Energy class (SEER/SCOP)

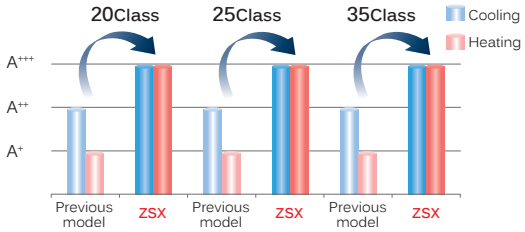


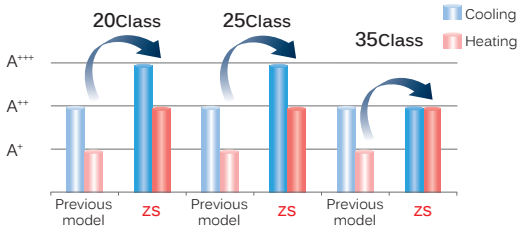


QUICK & HIGH EFFICIENCY Control

## DC PAM Inverter

An inverter driven system has a number of performance advantages over a constant speed system. For example, the variable compressor outputs can ensure quick heating after a startup and attain a set temperature more quickly.
The air conditioner can then slow down its compressor speed to save energy, keeping comfortable conditions.
Moreover, the compressor is DC driven, so it provides higher performance.

DC compressor motor

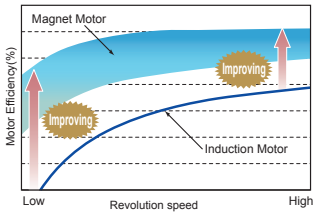


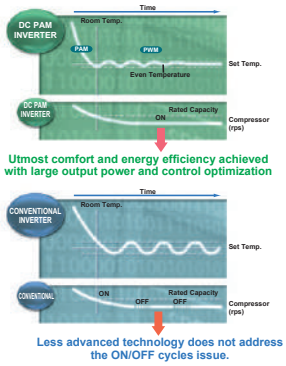


HIGH EFFICIENCY

## DC Twin Rotary Compressor

The newly developed DC twin rotary compressor performs highly efficient operation under the wide range conditions from low speed to high speed.
Besides low vibration, low sound level and high efficiency can also be achieved by the optimisation of mechanical parts and by the application of high power Neodymium motor.

*Featured on all models of ZSX series*

## Wide Range of Operation

Our new advanced technology has expanded the heating and cooling operation range.
This permits installation of the units with a heating and cooling operation under a low temperature condition down to –20°C. (ZSX series)

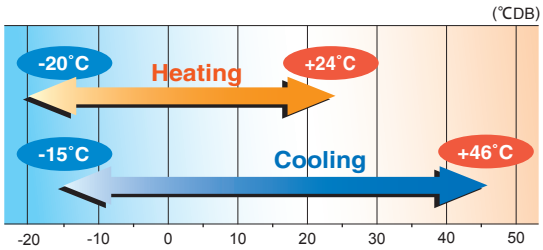


✻For the capacities under low temperature conditions, refer to technical manual.

# Our Latest Technologies (ZSX series)

## [ Outdoor unit ]

### Propeller fan

Optimised matching of the propeller fan and the fan motor in order to keep the same capacity as that of previous models with less electrical consumption. Synergy effect with leaf grill has increased efficiency by 5% and quietened the sound.

**Serration fan**

### Coated PCB

The printed wiring board of the outdoor unit is coated. It lasts longer due to improved tolerance to humidity.

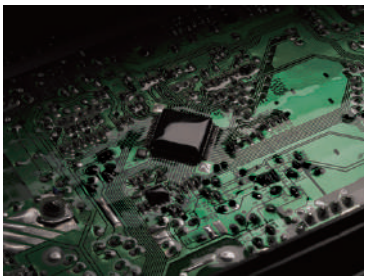

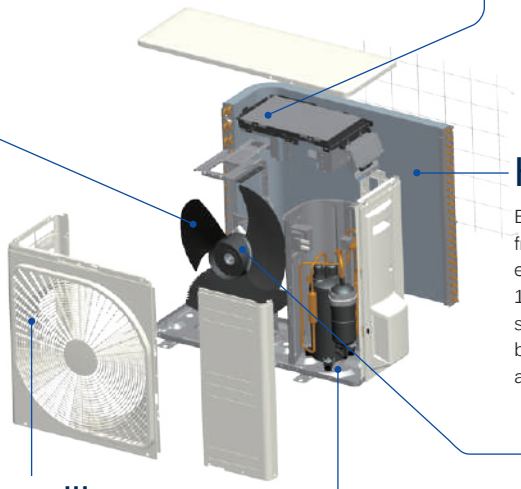

### Heat exchanger

By changing fin configuration from flat sheet to M shape fin, efficiency has increased by 10%. This high dimensional structure provides optimum balance of heat transfer and airflow.

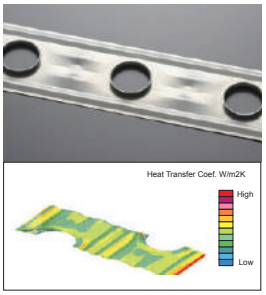


### DC Motor

DC fan motor produces high efficiency & high power

### Leaf shape grill

The radial shape grill has been developed in order to send airflow efficiently outside the unit along the grill. Decreasing the load for motor and propeller fan leads to greater energy efficiency and contributes to quieter sound.

### Three Sensors

Control of room temperature and humidity is very important for people to live a comfortable life.
Use of three sensors to control indoor temperature, indoor humidity and outdoor temperature enable unit to obtain optimum air-conditioning.

Sensor for indoor temperature and humidity

Sensor for outdoor temperature

### Superior corrosion resistance hot dipping steel sheet

Superior corrosion resistance hot dipping steel sheet is applied at the base of outdoor units.
It has superior corrosion resistance and scratch resistance properties compared to conventional materials.

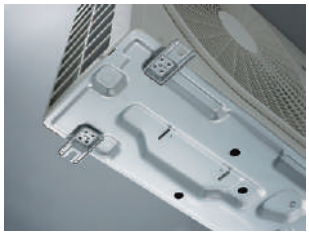

## [ Indoor unit ]

### Heat exchanger

Our optimal combination of fin configuration and copper tube has maximised airflow volume without expanding indoor unit's size in width. Compared with previous models, the heat exchanger efficiency rate has drastically improved by 33%. The fin can maximise airflow volume and save energy simultaneously.

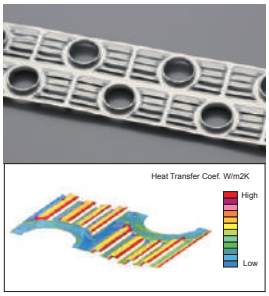


### Movable air inlet panel

Minimisation of air resistance is achieved by incorporating a movable air inlet panel of advanced design.

* This page is mainly described ZSX series.

# AIR FLOW

## Jet Air Technology Quiet Air Flow & Long Reach

We used the same aerodynamic analysis technology as used in developing jet engines.

CFD (computational fluid dynamics) used in blade shape design of jet engines, has been applied to the design of air channels in air conditioners to develop the ideal air channel system (air circulation). The jet air stream generated by this air channel system can bring large volume air without consuming much power. While at the same time, it delivers a uniform gentle breeze to every corner of the room.

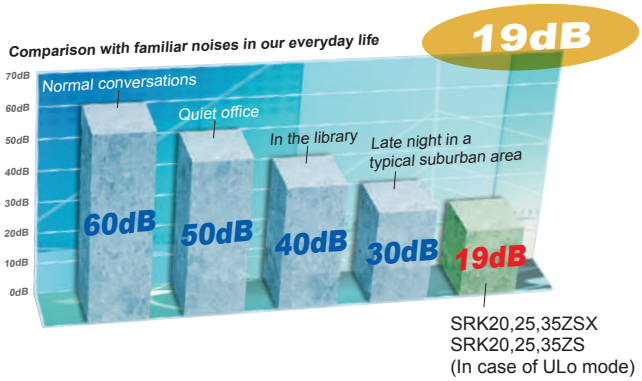


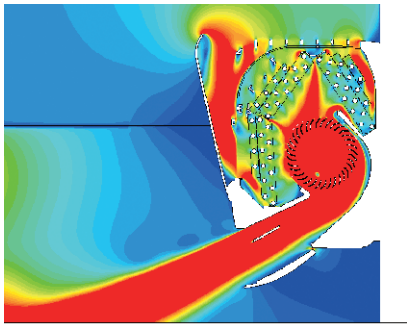

Fast ⟷ Slow
Colours in the figure show the air speed.

## Long Reach Air Flow

Long reach air flow is achieved by jet air technology. Good for large living rooms and shops, which increases comfort.

## Double Flap Large and Small

Comfort temperature is achieved thanks to a double flap system which optimises the air flow and is capable of producing horizontal and long reaching air flow in cooling operation, and strong and downward air flow in heating operation.

Programmed air distribution

# 3D AUTO Vertical + Horizontal

## Multi motors make 3 independent controls

3D AUTO is one touch programmed and multi motors make three independent air flow controls.
The uniform and quiet airflow can be delivered to every corner of the room, achieving economical operation and minimising energy loss.

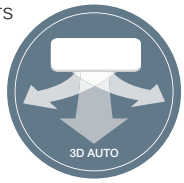


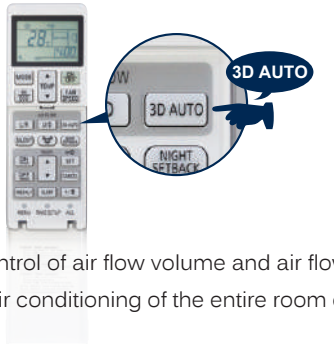


Thanks to automatic control of air flow volume and air flow direction, comfortable air conditioning of the entire room can be achieved effectively.
The cooled air flows directly to the ceiling in cooling operation mode, not directly at the occupants of the room. Comfort cooled air flow comes via the ceiling like a cool breeze.
In the heating mode, warm air flow can be sent down to the floor directly. The warm air then spreads along the floor achieving optimum comfort.

## Programmed 3D AUTO

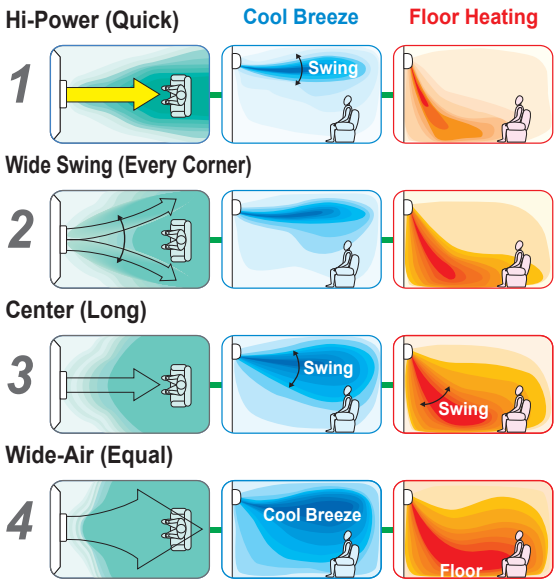


## Horizontal swings in 8 directions

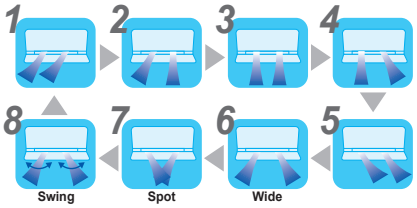


The airflow direction from the right and left louvers can be controlled individually. Eight different air flow patterns can be selected.

* This page is mainly described ZSX series.

# CLEAN AIR

This is the original technology to control the temperature and humidity for inactivating allergens

## Allergen Clear Operation

This can be activated by pressing the “allergen” button on the remote control and lasts 90 minutes before stopping automatically. It neutralises all the bacteria collected on the surface of the anti-allergenic filter thanks to its sophisticated interaction between temperature and humidity controls.

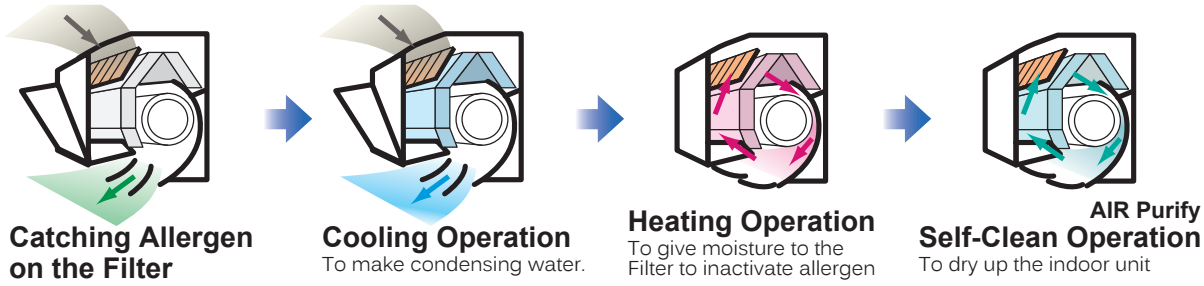


## Self Clean Operation

Self clean operation works for 2 hours after the unit has stopped its normal operation. The indoor unit is dried up and the growth of mold is restrained. Users can select whether this mode is utilized or not.

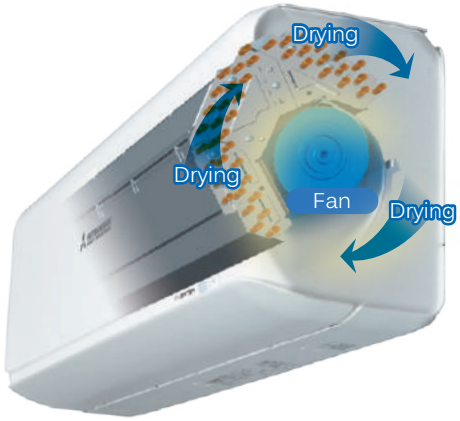


### Situation of mold after one week

**When you don’t execute “Self Clean Operation”**

Fungal mycelia expand.

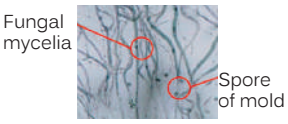


**When you execute “Self Clean Operation”**

The spore of mold doesn’t germinate.

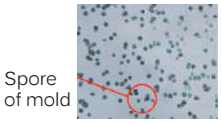


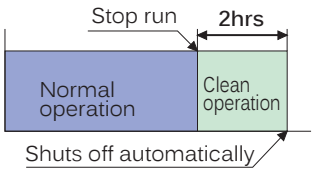


## Allergen Clear Filter

### Enzyme + Urea deactivates allergens and bacteria.

The allergen clear filter breaks down the pollen[*1], lice[*1], and allergens that live on cat skins, etc. and deactivates them. The secret of deactivation is the Enzyme-urea compound. It deactivates not only allergens but also all kinds of bacteria[*2], molds and viruses[*3]. Even if allergens and bacteria, etc. fly of the filter, they are deactivated, so the air in your room is kept fresh.

*1 Test method:
ELISA colorimetric method Laboratory:
Independent administrative agency national hospital mechanism Sagamihara Hospital, No.1536

*2 Test method:
ELISA colorimetric method / ELISA fluorescent method Laboratory:
Independent administrative agency national hospital mechanism Sagamihara Hospital, No.1536

*3 Test method:
TCID (Infection value 50%) Laboratory:
Foundation of Kitazato Environmental Science Center, No.15-0145

# Structure of Preventing Dirt

## Always keeping the indoor unit clean

The fan has undergone anti-microbial treatment to resist mold and germs, making the system clean and safe. This prevents foul odours, molds, etc. which can occur when an air conditioning system is not in operation.
(Compatible with all wall mounted type units.)

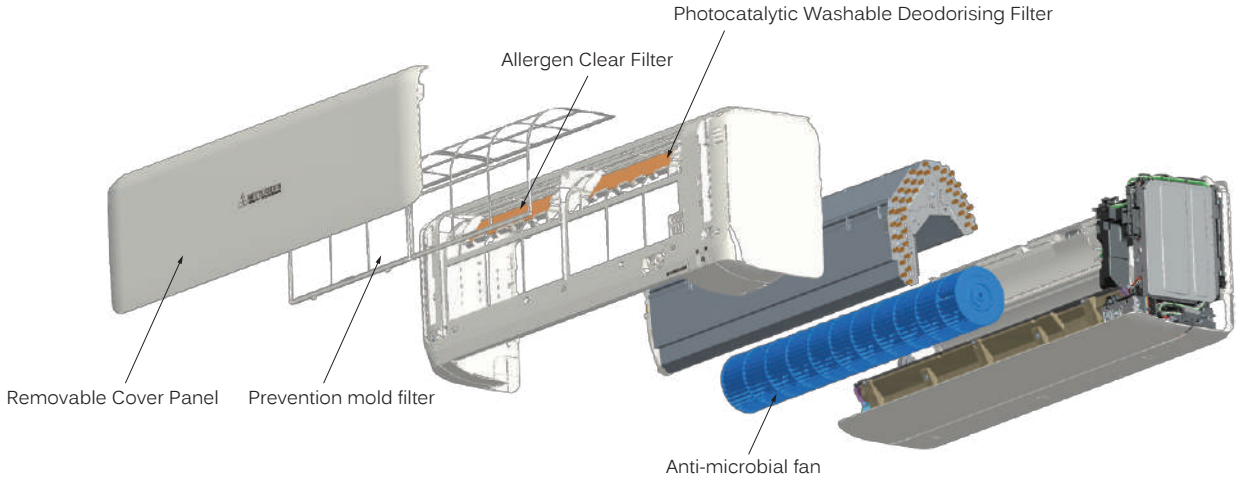


● **Efficacy of "Anti-microbial"**

Testing Authority:Japan Food Analysis Center

Test Report No. : 17067139001 - 0301
JIS Z 2801 Antimicrobial Products - Test for Antimicrobial Activity and Efficacy
Test Report No. : 17067139001 - 0501
JIS Z 2911 Methods of Test for Fungus Resistance
Tests were conducted with reference to the antimicrobial strength tests as follows Delere.

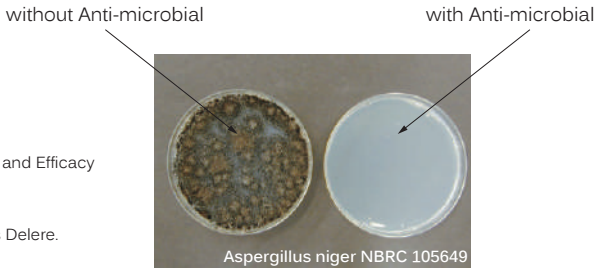


Comparison of growth of bacteria and mold on fan surfaces (microscopic image)

Tests conducted at the Mitsubishi Heavy Industries Nagoya Research Lab, 24 hours after contact with bacteria, cultured on agar media.

# Photocatalytic Washable Deodorising Filter

The deodorizing power can be restored by washing with water and drying in the sun, as such it is a recyclable deodorising filter capable of repeat use.

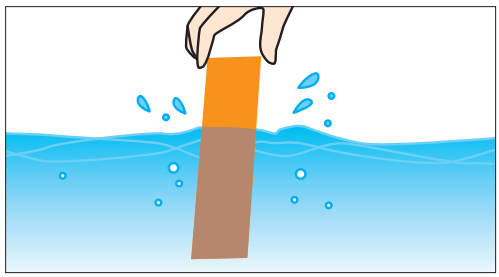

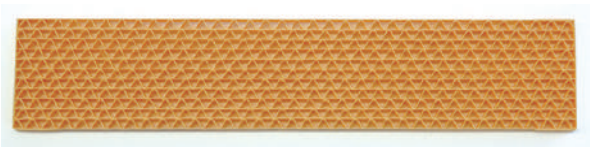

**Used in models**

| Filter \ Indoor Unit | SRK-ZSX | SRK-ZR | SRK-ZS | SRK-ZTL |
|---|---|---|---|---|
| Allergen Clear Filter | 1pc | 1pc | 1pc | 1pc |
| Photocatalytic Washable Deodorising Filter | 1pc | 1pc | 1pc | - |

* This page is mainly described ZSX series.

# ENERGY SAVING / COMFORT

## In a cooling operation

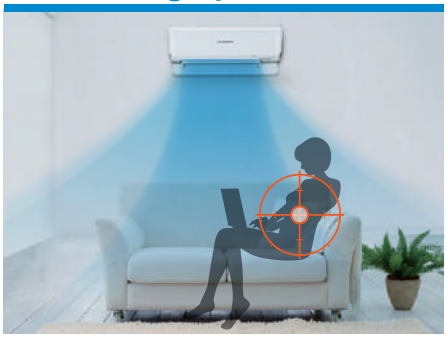

It is set to moderate operation when there is little movement in the room.

## In a heating operation

It is set to moderate operation when there is a volume of movement in the room.

# Eco Operation

Automatic energy saving control is done by detecting human activity.
Human activity is detected by a motion sensor which is installed in the unit.
Air conditioner adjusts its cooling/heating capacity according to low/high demand. Economy Cooling operation : air conditioner goes into energy saving control when low activity is detected.
Economy Heating operation : air conditioner goes into energy saving control when high activity is detected.
When the sensor detects that no people are present in the room, the unit will automatically reduce the power used to a moderate level after approximately 15 minutes and return to normal operation once people return to the room.

# Auto Off

Air conditioner stops operation and goes to “stand-by” mode after 1-hour absence. It turns ON again when human activity is detected within 12-hours,or turnes OFF after a 12-hours absence. *Can also be set to turn OFF after two hours.

Absent

It suppresses the power when there is nobody present in the room.

After 1-hour

You do not need to worry, even if you forget to turn off the power. Air conditioner stops until human activity is detected.

Come back to room

Automatically operates in the preset mode if you return to the room within twelve hours.

# Fuzzy Auto Mode

The temperature and humidity sensors check room conditions.
The unit automatically controls the operation mode and the setting temperature to operate efficiently.
Operation mode and cooling/heating capacity is controlled automatically according to one setting temperature.
Fuzzy auto mode offers automatic comfort temperature control even if weather condition changes quickly.

# High Power Operation

## *In a cooling operation*

This operation mode delivers powerful cool air to cool the room quickly.
It blows powerful cool air when you want to be cooled down after bathing or returning home on a hot summer day so that you can enjoy a cool sensation immediately.
The air conditioner automatically returns to the previous operation mode in 15 minutes to prevent the room from being cooled excessively.

## *In a heating operation*

This operation mode warms the whole room from the vicinity of the air conditioner to your feet.
It warms up the room promptly when you want to be warmed after getting out of bed or returning home during the winter season. The air conditioner automatically returns to the previous operation mode in 15 minutes to prevent the room from being warmed excessively.

# Silent Operation

When silent operation is set, the maximum pressure level of the outdoor unit will be 3dB(A) lower than standard nominal level (45dB(A) or less).
The compressor speed is set at a lower range than that of nominal operation, operating at 60% of nominal capacity.
Maximum fan speed of outdoor unit is set lower than nominal operation.

# Night Setback

During cold seasons, room temperatures can be maintained at a comfortable level even while the room is unattended.
The air conditioner keeps the temperature at 10°C.

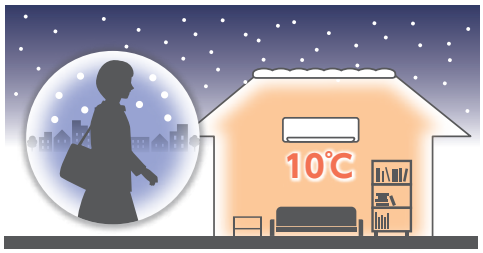


# Fireplace Function

By continuing to operate the indoor fan when the room temperature is stabilized, the warm air accumulated in the ceiling is circulated to the room.

* This page is mainly described ZSX series.

# TIMER / CONVENIENCE

## Weekly Timer

Up to 4 programs with timer operation (ON-TIMER / OFF-TIMER) are available for each day of the week. Maximum 28 programs per week can be set. Once set, the timer operation will repeat the same program every week unless otherwise cancelled.

## Sleep Timer

Too much cooling/heating is not necessary when people go to sleep. This function achieves moderate cooling/heating by adjusting its capacity and saving more energy as well.

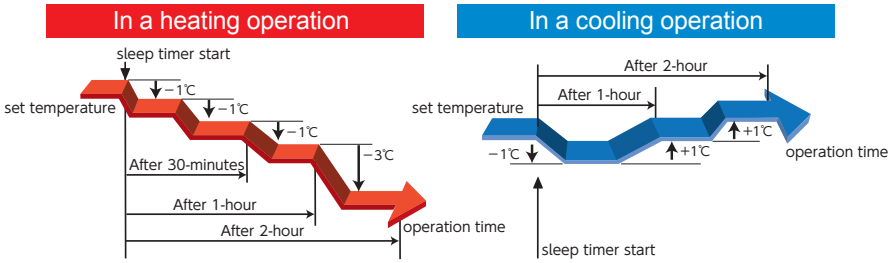


## Comfort start-up

Air conditioner controls room temperature to achieve comfort at the "set time" by 60-minutes pre-operation. This is convenient when you wake up or return home at a predetermined time. In ON-TIMER operation, the unit starts the operation a little earlier, so that the room can approach optimum temperature at ON time.

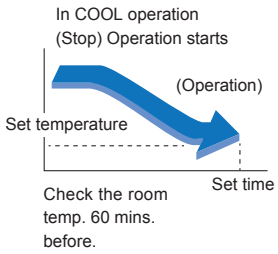


## Preset Operation

The preset operation features allow customised temperature and airflow settings, which will deliver ultimate comfort with one simple touch of the button. (Applied for ZSX, ZS, ZTL series)

## LED Brightness Adjustment

Brightness of the LED display can be adjusted according to the user's preference. (Applied for ZSX, ZS, ZTL series)

## Long Piping Length

ZSX series supports a piping length of up to 30m to give design flexibility.

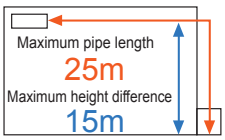


**20~35ZSX**

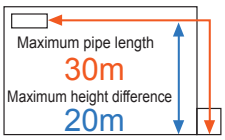


**50·60ZSX**

### Installation of air conditioners for a three-story house is available with long piping length

Suitable installation space can be found easily for outdoor units with long piping length. As one outdoor unit is necessary for a three-story house the space required for installation is relatively small so the unit can be obscured in place. Indoor units can be installed far apart such as on the first floor and the third floor.

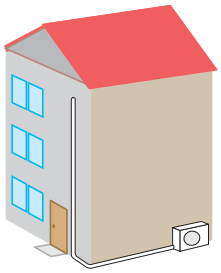

# Wireless Control System

With wireless device WF-RAC (Optional), you can control the air conditioner at home or on the go by installing Smart M-Air app on your smartphone or tablet.

## Weekly Timer

Timers can be set for different days of the week. They can also be set from the calendar.

## Electricity Graph

-Electricity usage graph

* Except for ZR series.

## Notification Function

-Shut-off reminder alert

-A notification will be sent to your smart device if the air conditioner is accidentally left running

-Hi temp/low temp alert

-Watching function

Search for "Smart M-Air" from the GooglePlay™ store for Android™ and AppStore for iPhone.

ANDROID APP ON Google play

Available on the App Store

## Other functions

-Turn ON/OFF

-Change operation mode (Cool,Heat,Dry,Auto)

-Control temperature

-Set Timers

-Home leave mode

-Favourite setting

-Vacant property mode (ZTL series only)

### System configuration

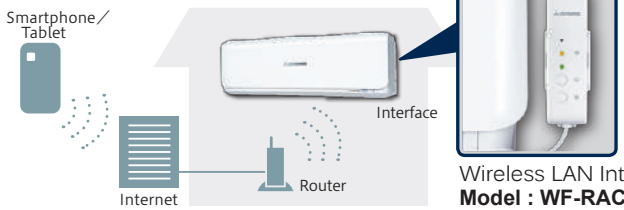

It can be stored inside.

(ZSX-W series only)
(Wireless Control System is equipped for the ZTL series)

Wireless LAN Interface
**Model : WF-RAC**

*SC-BIKN2-E cannot be used simultaneously for system configuration.

*Android is a trademark of Google Inc. IOS is a registered trademark of Cisco in the U.S. and other countries and is used under license.

### Applicable products

SRK-ZSX -W/-S (Optional)
SRK-ZS -W/-S (Optional)
SRK-ZR -W/-S (Optional)
SRK-ZTL -W (Built-in)

< EU/EEA market only >

airconwithme Wireless Adaptors

**Model :** INAWMMHI001I000

Please access the followings for details.

URL http://www.airconwithme.com
email info@ airconwithme.com

* These are developed by HMS Industrial Networks.

* This page is mainly described ZSX series.

# FUNCTIONS

## Energy saving

### Fuzzy Auto Mode
Using fuzzy logic algorithms, the unit determines the operating mode and temperature settings automatically and adjusts the inverter frequency.

### Motion Sensor
This sensor detects human activity and shifts the temperature setting according to the amount of activity in the room.

### Eco Operation
Room temperature and humidity are monitored using a sensor to automatically control the operation. In tandem with the motion sensor, the system enables an energy saving mode while maintaining comfort.

### Auto Off
Stops the operation automatically when there is no activity detected in the room for a certain period.

### Economy Mode
The unit will operate in energy saving mode in order to avoid excessive heating and cooling.

## Air flow

### Jet Air Technology
Air flow is regulated using the same blade technology as that in jet engines which produces a powerful yet efficient air flow.

### 3D Auto
This one touch program will activate the three independent motors to evenly distribute air flow and create optimum heating and cooling conditions.

### Auto Flap Mode
Depending on the operating mode, the unit will automatically set the position of the louvers at the optimal angle.

### Memory Louver
While the louver is swinging it can be stopped at any angle. On the next start-up the louver returns to the same position that it was when the operation last stopped.

### Vertical Auto Swing
Louvers swing up and down continuously and can be set at a fixed angle.

### Horizontal Auto Swing
Louvers swing right and left continuously and can be set at a fixed angle.

### Draft Prevention Setting
Draft Prevention setting provides a comfortable air flow without any draft feeling. Whether cooling or heating a room, the remote control can be used to instantly suppress any warm or cool drafts. This accurately assists how air flow is directed out of the indoor unit.

## Clean Operation & Filter

### Allergen Clear Operation
The system is equipped to suppress the influence of the allergens caught by the Allergen Clear Filter by controlling the temperature and humidity. Enzymes are used to suppress the influence of the allergens caught during everyday operation.

### Self-Clean Operation
Self clean mode dries the indoor unit and filter, preventing the growth of mould. This runs for 2 hours after the unit has been switched off.

### Allergen Clear Filter
The filter breaks down the pollen, lice, and all allergens that live on cat skins, etc. and deactivates them.

### Photocatalytic Washable Deodorising Filter
This easy to clean filter that catches airborne allergens and particles before neutralising odour causing bacteria within them.

### Removable Cover Panel
With an easy to remove front panel, cleaning and maintenance of the indoor unit is quicker and easier than ever.

## Comfort

### Dry Operation
During dry operation the unit will act as a dehumidifier to remove moisture from the air.

### High Power Operation
Use the high power function to quickly reach your optimum temperature level when you first turn on the unit. This function will operate for a maximum of 15 minutes before returning to normal operation.

### Silent Operation
This function allows you to program periods where the unit will operate with reduced noise levels and is ideal for temperature control during the night.

### Night Setback
Designed for cold season, this ensures the room temperature is kept at around 10°C, even while unoccupied.

### Fireplace Function
By continuing to operate the indoor fan when the room temperature is stabilized, the warm air accumulated in the ceiling is circulated to the room.

## Timer

### Weekly Timer
Set your unit to turn on and off automatically on a weekly basis to suit your usual room usage on each day.

### 24-hour On/Off Programmable Timer
By combining a start timer with a stop timer,you can register two timer operations a day.
Once set, timers will faithfully start or stop thesystem at a specified time of the dayrepeatedly.

### Sleep Timer
The room temperature is automatically controlled during the set sleep mode period, ensuring that room temperature will not get too cold or too hot. Set a predetermined amount of time between 30 and 240 minutes that your unit will operate for before switching off.

### On/Off Timer
This timer allows the unit to be set to turn ON or OFF automatically once within a 24 hour period.

## Convenience

### Comfort Start-up
With the ON-TIMER function, the unit will switch on earlier than the SET time, to ensure the optimum temperature is reached at the ON TIME.

### Preset Operation
The desired preset operation mode can be enabled with a single touch of a button.

### Child Lock
Lock the remote control to prevent child from tampering with the remote control.

### LED Brightness Adjustment
The unit has an adjustable LED brightness display for minimal disturbance during night operation.

### Positioning of Installation
This allows you to manually set the air flow direction when the unit is installed against a wall.

### Wireless Control System
If you acquired the Wireless device, you can control the air conditioner at home or on the go by installing Smart M-Air app on your smartphone or tablet.

## Others

### Microcomputer-Operated Defrosting
This mode is automatically activated during low ambient temperatures to prevent the frosting of the outdoor heat exchanger and maintains heating efficiency.

### Self Diagnostics
The internal microcomputer automatically runs a diagnostic of the system in the event of a malfunction. This enables your authorised dealer to isolate and repair any issues.

### Auto Restart Function
If there is a temporary loss of power, when power is restored, the unit will automatically restart in the same operating mode it was in.

### Back-up Switch
If the remote control fails, the unit can be operated via an on/off switch on the indoor unit.

| | | ZSX | ZR | ZS | ZTL | ZSP | SRF | SRR | FDTC*3 | SKM | FDUM*3 | FDE*3 |
|---|---|---|---|---|---|---|---|---|---|---|---|---|
| Energy saving | Fuzzy Auto Mode | ● | ● | ● | ● | ● | ● | ● | ● | ● | ● | ● |
| | Motion Sensor | ● | | | | | | | ●*4 option | | ● option | ● option |
| | Eco Operation | ● | | | | | | | ●*4 option | | ● option | ● option |
| | Auto Off | ● | | | | | | | ●*4 option | | ● option | ● option |
| | Economy Mode | | ● | ● | ● | ● | ● | ● | | ● | | |
| Air flow | Jet Air Technology | ● | ● | ● | ● | ● | | | | ● | | |
| | 3D Auto | ● | ● | ● | ● | | | | | | | |
| | Auto Flap Mode | ● | ● | ● | ● | ● | ● | | ● | ● | | ● |
| | Memory Louver | ● | ● | ● | ● | ● | ● | | ● | ● | | ● |
| | Vertical Auto Swing | ● | ● | ● | ● | ● | ● | | ● | ● | | ● |
| | Horizontal Auto Swing | ● | ● | ● | ● | | | | | | | |
| | Draft Prevention Setting | | | | | | | | ●*4 option | | | |
| Clean operation & Filter | Allergen Clear Operation*1 | ● | ● | ● | ● | | | | | | | |
| | Self Clean Operation | ● | ● | ● | ● | ● | ● | ● | | ● | | |
| | Allergen Clear Filter | ● | ● | ● | ● | | ● | | | | | |
| | Photocatalytic Washable Deodorising Filter | ● | ● | ● | | | ● | | | | | |
| | Removable Cover Panel | ● | ● | ● | ● | ● | ● | | | | | |
| Comfort | Dry Operation | ● | ● | ● | ● | ● | ● | ● | ● | ● | ● | ● |
| | High Power Operation | ● | ● | ● | ● | ● | ● | ● | ● | ● | ● | ● |
| | Silent Operation*2 | ● | ● | ● | ● | | ● | ● | | | | |
| | Night Setback | ● | ● | ● | ● | | ● | ● | | | | |
| | Fireplace Function | ● | | ● | ● | | | | | | | |
| Timer | Weekly Timer | ● | ● | ● | ●*5 | | ● | ● | ● | | ● | ● |
| | 24-hour On/Off Programmable Timer | | | | ● | ● | | | | ● | | |
| | Sleep Timer | ● | ● | ● | ● | ● | ● | ● | ● | ● | ● | ● |
| | On/Off Timer | ● | ● | ● | ● | ● | ● | ● | ● | ● | ● | ● |
| Convenience | Comfort Start-up | ● | ● | ● | ● | ● | ● | ● | ● | ● | ● | ● |
| | Preset Operation | ● | | ● | ● | | ● | ● | | | | |
| | Child Lock | ● | ● | ● | ● | | ● | ● | | | | |
| | LED Brightness Adjustment | ● | | ● | ● | | | | | | | |
| | Positioning of Installation | ● | ● | ● | ● | | | | | | | |
| | Wireless Control System | ● option | ● option | ● option | ● | | | | | | | |
| Others | Microcomputer-Operated Defrosting | ● | ● | ● | ● | ● | ● | ● | ● | ● | ● | ● |
| | Self-Diagnostic Function | ● | ● | ● | ● | ● | ● | ● | ● | ● | ● | ● |
| | Auto Restart Function | ● | ● | ● | ● | ● | ● | ● | ● | ● | ● | ● |
| | Back-up Switch | ● | ● | ● | ● | ● | ● | ● | | ● | | |

*1 In case of Multi-split system, is not available. *2 It can not be used for SCM40・45ZS-S, SCM100・125ZM-S. *3 When using wired remote control (RC-EX3A). *4 FDTC-VH only *5 For the ZTL series, the “Weekly Timer” function could only be used from the application Smart M-air.

R32

# SINGLE-SPLIT WALL MOUNTED TYPE

Diamond Series

# SRK-ZSX-W

**SRK20ZSX-W, SRK25ZSX-W, SRK35ZSX-W**
**SRK50ZSX-W, SRK60ZSX-W**

Pure White(-W)

A'DESIGN AWARD WINNER 2017 SILVER

M-Air

**Wireless Control System (option)**

**Wireless remote control**

**SRC20ZSX-W, SRC25ZSX-W, SRC35ZSX-W, SRC50ZSX-W2, SRC60ZSX-W1**

## KEY FEATURES

- ZSX series with the "Elegant Timeless Design" is best suited for small to medium sized living spaces.
- High Seasonal efficiency performance is up to A$^{+++}$ in cooling and heating.
- Low Global Warming Potential (GWP) and High energy efficiency by new refrigerant R32.
- Quiet Air Flow & Long Reach is achieved by jet technology.
- Allergen clear operation cleans air, using a control scheme owned only by Mitsubishi Heavy Industries Thermal Systems.
- Wireless interface control (optional) .

## SPECIFICATIONS

| Indoor unit | | | | SRK20ZSX-W,-WB,-WT | SRK25ZSX-W,-WB,-WT | SRK35ZSX-W,-WB,-WT | SRK50ZSX-W,-WB,-WT | SRK60ZSX-W,-WB,-WT |
|---|---|---|---|---|---|---|---|---|
| Outdoor unit | | | | SRC20ZSX-W | SRC25ZSX-W | SRC35ZSX-W | SRC50ZSX-W2 | SRC60ZSX-W1 |
| Power source | | | | 1Phase, 220 - 240, 50Hz | | | | |
| Nominal cooling capacity (Min~Max) | | | kW | 2.0 (0.9~3.4) | 2.5 (0.9~3.8) | 3.5 (0.9~4.5) | 5.0 (1.0~6.2) | 6.1 (1.0~6.9) |
| Nominal heating capacity (Min~Max) | | | kW | 2.7 (0.8~5.5) | 3.2 (0.8~6.0) | 4.3 (0.8~6.8) | 6.0 (0.8~8.2) | 6.8 (0.8~8.8) |
| Power consumption | | Cooling/Heating | kW | 0.31 / 0.47 | 0.44 / 0.59 | 0.74 / 0.90 | 1.24 / 1.36 | 1.71 / 1.65 |
| EER/COP | | Cooling/Heating | | 6.45 / 5.74 | 5.68 / 5.42 | 4.73 / 4.78 | 4.03 / 4.41 | 3.57 / 4.12 |
| Max. running current | | | A | 9 | 9 | 9 | 15 | 15 |
| Sound power level | Indoor | Cooling/Heating | dB(A) | 53 / 55 | 55 / 56 | 58 / 58 | 59 / 62 | 62 / 63 |
| | Outdoor | Cooling/Heating | | 56 / 58 | 57 / 58 | 61 / 62 | 63 / 61 | 65 / 64 |
| Sound pressure level | Indoor | Cooling (Hi/Me/Lo/Ulo) | | 38 / 31 / 24 / 19 | 39 / 33 / 25 / 19 | 43 / 35 / 26 / 19 | 44 / 39 / 31 / 22 | 48 / 41 / 33 / 22 |
| | | Heating (Hi/Me/Lo/Ulo) | | 38 / 33 / 25 / 19 | 40 / 34 / 27 / 19 | 42 / 35 / 28 / 19 | 47 / 41 / 33 / 23 | 47 / 42 / 34 / 23 |
| | Outdoor | Cooling/Heating | | 43 / 45 | 44 / 45 | 48 / 47 | 51 / 49 | 52 / 53 |
| Air flow | Indoor | Cooling (Hi/Me/Lo/Ulo) | $m^3$/min | 11.3 / 9.1 / 6.0 / 5.0 | 12.2 / 10.0 / 6.7 / 5.0 | 13.1 / 10.8 / 7.3 / 5.0 | 14.3 / 12.4 / 7.8 / 5.4 | 16.3 / 13.4 / 8.9 / 5.4 |
| | | Heating (Hi/Me/Lo/Ulo) | | 12.2 / 10.3 / 7.2 / 5.4 | 12.8 / 11.0 / 7.8 / 5.4 | 13.9 / 11.8 / 8.6 / 5.4 | 17.3 / 14.3 / 9.8 / 6.2 | 17.8 / 13.7 / 10.9 / 6.2 |
| | Outdoor | Cooling/Heating | | 31.0 / 31.0 | 31.0 / 31.0 | 36.0 / 31.0 | 39.0 / 33.0 | 41.5 / 39.0 |
| Exterior dimensions | Indoor | HeightxWidthxDepth | mm | 305 x 920 x 220 | | | | |
| | Outdoor | | | 640 x 800(+71) x 290 | | | | |
| Net weight | Indoor / Outdoor | | kg | 13.0 / 43.0 | | | 13.0 / 45.0 | |
| Refrigerant | | Type/GWP | | R32 / 675 | | | | |
| | | Charge | kg/TCO$_2$Eq | 1.20 / 0.810 | | | 1.30 / 0.878 | |
| Refrigerant piping size | | Liquid/Gas | ø mm | 6.35(1/4") / 9.52(3/8") | | | 6.35(1/4") / 12.7(1/2") | |
| Refrigerant line (one way) length [chargeless length] | | | m | Max.25 [15] | | | Max.30 [15] | |
| Vertical height differences | | Outdoor is higher/lower | m | Max.15 / Max.15 | | | Max.20 / Max.20 | |
| Outdoor operating temperature range | | Cooling | ˚CDB | -15~46 | | | | |
| | | Heating | | -20~24 | | | | |
| Clean filter | | | | Allergen Clear Filter x 1, Photocatalytic Washable Deodorising Filter x 1 | | | | |

- The data are measured under the following conditions(ISO-T1, H1). Cooling: Indoor temp. of 27˚CDB, 19˚CWB, and outdoor temp. of 35˚CDB. Heating: Indoor temp. of 20˚CDB, and outdoor temp. of 7˚CDB, 6˚CWB.
- Sound level indicates the value in an anechoic chamber.During operation these values are somewhat higher due to ambient conditions.
- 'tonne(s) of $CO_2$ equivalent' means a quantity of greenhouse gases- expressed as the product of the weight of the greenhouse gases in metric tonnes and of their global warming potential.

## Mitsubishi Heavy Industries latest technology offers high seasonal efficiency

The new ZSX series meets outstanding energy efficiency receiving Europe's highest seasonal energy rating ($A^{+++}$).

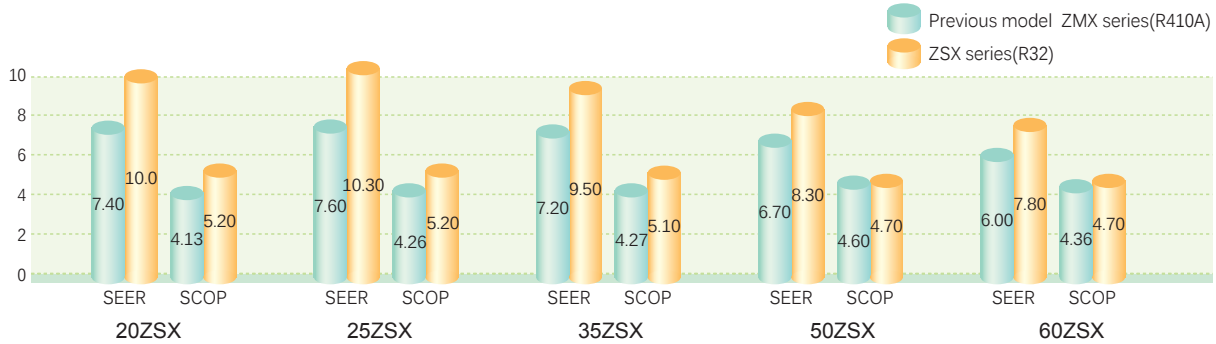


- SEER and SCOP are defined in European regulations. Please refer to P114

## Colour variation available

User can choose the model from three different colours allowing more choice depending on the style of the room.

Black & White(-WB)

Titanium(-WT)

R32

# SINGLE-SPLIT WALL MOUNTED TYPE

Diamond Series

# SRK-ZR-W

SRK63ZR-W, SRK71ZR-W, SRK80ZR-W, SRK100ZR-W

M-Air

Wireless Control System (option)

Wireless remote control

SRC63ZR-W

SRC71ZR-W, SRC80ZR-W

FDC100VNP-W

## KEY FEATURES

- ZR series is the ideal solution for heating and cooling larger spaces in your home.
- Compact and light weighted . The 10.0kW outdoor unit is now 57kg and is 20% lighter than the previous model.
- Low Global Warming Potential (GWP) and High energy efficiency by new refrigerant R32.
- Quiet Air Flow & Long Reach is achieved by jet technology.
- Allergen clear operation cleans air, using a control scheme owned only by Mitsubishi Heavy Industries Thermal Systems.
- Wireless interface control (optional) .

## SPECIFICATIONS

| Indoor unit | | | | SRK63ZR-W | SRK71ZR-W | SRK80ZR-W | SRK100ZR-W |
|---|---|---|---|---|---|---|---|
| Outdoor unit | | | | SRC63ZR-W | SRC71ZR-W | SRC80ZR-W | FDC100VNP-W |
| Power source | | | | 1 Phase, 220 - 240V, 50Hz | | | |
| Nominal cooling capacity (Min~Max) | | | kW | 6.3 (1.2~7.4) | 7.1 (2.3~7.8) | 8.0 (2.3~9.7) | 9.6 (2.1~9.6) |
| Nominal heating capacity (Min~Max) | | | kW | 7.1 (0.8~9.3) | 8.0 (2.0~10.8) | 9.0 (2.1~11.2) | 10.0 (1.7~10.4) |
| Power consumption | | Cooling/Heating | kW | 1.63 / 1.64 | 1.93 / 1.95 | 2.09 / 2.27 | 3.10 / 2.80 |
| EER/COP | | Cooling/Heating | | 3.87 / 4.33 | 3.68 / 4.10 | 3.83 / 3.96 | 3.10 / 3.57 |
| Max. running current | | | A | 14.5 | 17 | 17 | 19 |
| Sound power level | Indoor | Cooling/Heating | dB(A) | 56 / 58 | 57 / 60 | 60 / 62 | 63 / 63 |
| | Outdoor | Cooling/Heating | | 64 / 65 | 63 / 63 | 67 / 67 | 68 / 67 |
| Sound pressure level | Indoor | Cooling (Hi/Me/Lo/Ulo) | | 44 / 39 / 35 / 25 | 44 / 41 / 37 / 25 | 47 / 44 / 39 / 26 | 48 / 45 / 40 / 27 |
| | | Heating (Hi/Me/Lo/Ulo) | | 44 / 38 / 34 / 28 | 46 / 39 / 35 / 28 | 47 / 41 / 36 / 29 | 48 / 43 / 38 / 30 |
| | Outdoor | Cooling/Heating | | 54 / 54 | 53 / 51 | 56 / 55 | 56 / 54 |
| Air flow | Indoor | Cooling (Hi/Me/Lo/Ulo) | $m^3$/min | 20.5 / 18.1 / 15.7 / 10.4 | 20.5 / 18.6 / 16.2 / 10.4 | 23.5 / 20.2 / 17.5 / 10.4 | 24.5 / 21.3 / 17.6 / 10.4 |
| | | Heating (Hi/Me/Lo/Ulo) | | 22.5 / 19.0 / 16.5 / 13.1 | 25.0 / 19.8 / 17.3 / 13.3 | 26.5 / 21.3 / 18.4 / 13.5 | 27.5 / 23.2 / 19.1 / 13.6 |
| | Outdoor | Cooling/Heating | | 41.5 / 41.5 | 55 / 43.5 | 63 / 49.5 | 63 / 55 |
| Exterior dimensions | Indoor | HeightxWidthxDepth | mm | 339 x 1197 x 262 | | | |
| | Outdoor | | | 640 x 800(+71) x 290 | 750 x 880(+88) x 340 | | |
| Net weight | Indoor / Outdoor | | kg | 15.5 / 45.0 | 15.5 / 56.0 | 16.5 / 57.0 | |
| Refrigerant | | Type/GWP | | R32 / 675 | | | |
| | | Charge | kg/$TCO_2$Eq | 1.25 / 0.844 | 1.5 / 1.013 | 1.6 / 1.080 | 1.7 / 1.148 |
| Refrigerant piping size | | Liquid/Gas | ø mm | 6.35(1/4") / 12.7(1/2") | 6.35(1/4") / 15.88(5/8") | | |
| Refrigerant line (one way) length [chargeless length] | | | m | Max.30 [15] | | | |
| Vertical height differences | | Outdoor is higher/lower | m | Max.20 / Max.20 | | | |
| Outdoor operating temperature range | | Cooling | ˚CDB | -15~46 | | | |
| | | Heating | | -15~24 | | | |
| Clean filter | | | | Allergen Clear Filter x 1, Photocatalytic Washable Deodorising Filter x 1 | | | |

- The data are measured under the following conditions(ISO-T1, H1). Cooling: Indoor temp. of 27˚CDB, 19˚CWB, and outdoor temp. of 35˚CDB. Heating: Indoor temp. of 20˚CDB, and outdoor temp. of 7˚CDB, 6˚CWB.
- Sound level indicates the value in an anechoic chamber. During operation these values are somewhat higher due to ambient conditions.
- 'tonne(s) of $CO_2$ equivalent' means a quantity of greenhouse gases- expressed as the product of the weight of the greenhouse gases in metric tonnes and of their global warming potential.

# SINGLE-SPLIT WALL MOUNTED TYPE

Premium Series

# SRK-ZS-W

SRK20ZS-W, SRK25ZS-W,
SRK35ZS-W, SRK50ZS-W

Pure White(-W)

## Colour variation available

Users can choose their favorite colour from three choices.

Black & White (-WB)

Titanium (-WT)

**Wireless Control System (option)**

**Wireless remote control**

**SRC20ZS-W, SRC25ZS-W2 SRC35ZS-W2**

**SRC50ZS-W**

## KEY FEATURES

- Elegant, timeless design, best suited for small to medium sized living spaces.
- Users can choose a color they like from three different choices.
- Low Global Warming Potential (GWP) and High energy efficiency by new refrigerant R32.
- Quiet Air Flow & Long Reach is achieved by jet technology.
- Allergen clear operation cleans air, using a control scheme owned only by Mitsubishi Heavy Industries Thermal Systems.
- Wireless interface control (optional) .

## SPECIFICATIONS

| Indoor unit | | | | SRK20ZS-W,-WB,-WT | SRK25ZS-W,-WB,-WT | SRK35ZS-W,-WB,-WT | SRK50ZS-W,-WB,-WT |
|---|---|---|---|---|---|---|---|
| Outdoor unit | | | | SRC20ZS-W | SRC25ZS-W2 | SRC35ZS-W2 | SRC50ZS-W |
| Power source | | | | 1 Phase, 220 - 240V, 50Hz | | | |
| Nominal cooling capacity (Min~Max) | | | kW | 2.0(0.9~2.9) | 2.5(0.9~3.1) | 3.5(0.9~4.0) | 5.0(1.3~5.5) |
| Nominal heating capacity (Min~Max) | | | kW | 2.7(0.9~4.3) | 3.2(0.9~4.5) | 4.0(0.9~5.0) | 5.8(1.3~6.6) |
| Power consumption | | Cooling/Heating | kW | 0.44 / 0.59 | 0.62 / 0.74 | 0.89 / 0.94 | 1.35 / 1.56 |
| EER/COP | | Cooling/Heating | | 4.55 / 4.58 | 4.03 / 4.32 | 3.93 / 4.26 | 3.70 / 3.72 |
| Max. running current | | | A | 9 | 9 | 9 | 14.5 |
| Sound power level | Indoor | Cooling/Heating | dB(A) | 48 / 50 | 50 / 53 | 54 / 56 | 59 / 60 |
| | Outdoor | Cooling/Heating | | 56 / 56 | 56 / 58 | 61 / 61 | 61 / 63 |
| Sound pressure level | Indoor | Cooling (Hi/Me/Lo/Ulo) | | 34 / 25 / 22 / 19 | 36 / 28 / 23 / 19 | 40 / 30 / 26 / 19 | 46 / 36 / 29 / 22 |
| | | Heating (Hi/Me/Lo/Ulo) | | 36 / 29 / 23 / 19 | 39 / 30 / 24 / 19 | 41 / 36 / 25 / 19 | 46 / 37 / 31 / 24 |
| | Outdoor | Cooling/Heating | | 45 / 45 | 46 / 46 | 50 / 48 | 51 / 52 |
| Air flow | Indoor | Cooling (Hi/Me/Lo/Ulo) | $m^3$/min | 9.3 / 7.0 / 5.9 / 5.0 | 9.9 / 8.0 / 5.9 / 5.0 | 11.3 / 8.7 / 7.0 / 5.0 | 12.1 / 9.9 / 7.4 / 5.9 |
| | | Heating (Hi/Me/Lo/Ulo) | | 10.0 / 8.5 / 6.5 / 5.9 | 11.3 / 8.7 / 6.7 / 5.9 | 12.3 / 11.0 / 7.0 / 5.6 | 13.9 / 11.2 / 9.1 / 7.4 |
| | Outdoor | Cooling/Heating | | 27.4 / 23.6 | 27.4 / 23.6 | 31.5 / 27.8 | 32.8 / 32.8 |
| Exterior dimensions | Indoor | HeightxWidthxDepth | mm | 290 x 870 x 230 | | | |
| | Outdoor | | | 540 x 780(+62) x 290 | | | 595 x 780(+62) x 290 |
| Net weight | Indoor / Outdoor | | kg | 9.5 / 31.0 | | 9.5 / 34.5 | 10.0 / 36.0 |
| Refrigerant | | Type/GWP | | R32 / 675 | | | |
| | | Charge | kg/$TCO_2Eq$ | 0.62 / 0.419 | | 0.78 / 0.527 | 1.05 / 0.709 |
| Refrigerant piping size | | Liquid/Gas | ø mm | 6.35(1/4") / 9.52(3/8") | | | 6.35(1/4") / 12.7(1/2") |
| Refrigerant line (one way) length [chargeless length] | | | m | Max. 20 [15] | | | Max. 25 [15] |
| Vertical height differences | | Outdoor is higher/lower | m | Max. 10 / Max. 10 | | | Max. 15 / Max. 15 |
| Outdoor operating temperature range | | Cooling | ˚CDB | -15~46 | | | |
| | | Heating | | -15~24 | | | |
| Clean filter | | | | Allergen Clear Filter x 1, Photocatalytic Washable Deodorising Filter x 1 | | | |

- The data are measured under the following conditions(ISO-T1, H1). Cooling: Indoor temp. of 27˚CDB, 19˚CWB, and outdoor temp. of 35˚CDB. Heating: Indoor temp. of 20˚CDB, and outdoor temp. of 7˚CDB, 6˚CWB.
- Sound level indicates the value in an anechoic chamber. During operation these values are somewhat higher due to ambient conditions.
- 'tonne(s) of $CO_2$ equivalent' means a quantity of greenhouse gases- expressed as the product of the weight of the greenhouse gases in metric tonnes and of their global warming potential.

R32

# SINGLE-SPLIT WALL MOUNTED TYPE

Standard Plus Series

# SRK-ZTL-W

**New!**

**SRK63ZTL-W, SRK71ZTL-W**

M-Air

**Wireless Control System**

**Wireless remote control**

**SRC63ZTL-W, SRC71ZTL-W**

## KEY FEATURES

- Elegant timeless design with compact sizing. Suitable for large rooms (more compact than ZR series)
- Wireless Control System is equipped as standard.
- New remote control with simple design.
- 2 levels of silent modes are available to further reduce the outdoor unit noise level.
- Installation flexibility: factory charge that covers installation up to 15 m and 30 m with additional charge. (one of the longest in the market)
- Lightweight outdoor unit offers great installation flexibility.

## SPECIFICATIONS

| Indoor unit | | | | SRK63ZTL-W | SRK71ZTL-W |
|---|---|---|---|---|---|
| Outdoor unit | | | | SRC63ZTL-W | SRC71ZTL-W |
| Power source | | | | 1 Phase, 220 - 240V, 50Hz | |
| Nominal cooling capacity (Min~Max) | | | kW | 6.3 (1.2 ~ 7.1) | 7.1 (1.2 ~ 7.3) |
| Nominal heating capacity (Min~Max) | | | kW | 7.1 (1.0 ~ 8.5) | 8.0 (1.1 ~ 9.1) |
| Power consumption | | Cooling/Heating | kW | 1.84 / 2.01 | 2.45 / 2.37 |
| EER/COP | | Cooling/Heating | | 3.42 / 3.53 | 2.90 / 3.38 |
| Max. running current | | | A | 17 | 17 |
| Sound power level | Indoor | Cooling/Heating | dB(A) | 60 / 60 | 61 / 61 |
| | Outdoor | Cooling/Heating | | 64 / 66 | 66 / 66 |
| Sound pressure level | Indoor | Cooling (Hi/Me/Lo/Ulo) | | 46 / 43 / 38 / 30 | 48 / 44 / 39 / 31 |
| | | Heating (Hi/Me/Lo/Ulo) | | 47 / 43 / 39 / 32 | 47 / 44 / 40 / 33 |
| | Outdoor | Cooling/Heating | | 52 / 54 | 53 / 54 |
| Air flow | Indoor | Cooling (Hi/Me/Lo/Ulo) | $m^3$/min | 17.0 / 14.7 / 12.1 / 9.4 | 17.5 / 15.2 / 12.6 / 9.4 |
| | | Heating (Hi/Me/Lo/Ulo) | | 18.4 / 17.2 / 14.1 / 11.6 | 18.9 / 17.7 / 14.6 / 11.6 |
| | Outdoor | Cooling/Heating | | 43.0 / 40.9 | 43.0 / 40.9 |
| Exterior dimensions | Indoor | HeightxWidthxDepth | mm | 294 x 998 x 230 | |
| | Outdoor | | | 640 x 800(+71) x 290 | |
| Net weight | Indoor / Outdoor | | kg | 12.0 / 42.5 | |
| Refrigerant | | Type/GWP | | R32 / 675 | |
| | | Charge | kg/$TCO_2Eq$ | 1.20 / 0.81 | |
| Refrigerant piping size | | Liquid/Gas | ø mm | 6.35(1/4") / 12.7(1/2") | |
| Refrigerant line (one way) length[chargeless length] | | | m | Max. 30 [15] | |
| Vertical height differences | | Outdoor is higher/lower | m | Max. 20 / Max.20 | |
| Outdoor operating temperature range | | Cooling | ˚CDB | -15~46 | |
| | | Heating | | -15~24 | |
| Clean filter | | | | Allergen Clear Filter x 1, Photocatalytic Washable Deodorising Filter x 1 (Option) | |

- The data are measured under the following conditions(ISO-T1, H1). Cooling: Indoor temp. of 27˚CDB, 19˚CWB, and outdoor temp. of 35˚CDB. Heating: Indoor temp. of 20˚CDB, and outdoor temp. of 7˚CDB, 6˚CWB.
- Sound level indicates the value in an anechoic chamber. During operation these values are somewhat higher due to ambient conditions.
- 'tonne(s) of $CO_2$ equivalent' means a quantity of greenhouse gases- expressed as the product of the weight of the greenhouse gases in metric tonnes and of their global warming potential.

## Wireless LAN Built-in model

Wireless Control System is equipped as standard

### Vacant Property Mode

Temperature can be set as follows:
Cooling 31°C to 33°C (interval 1°C),
Heating 10°C to 17°C (interval 1°C)
Only "Cool" and "Heat" operation modes can be selected.

### Home Leave Mode

Heating / Cooling operation is automatically turned on when the room temperature is lower or higher than the set temperature.

### Electricity Bill Graph

Displays an electricity bill by month on a graph.
You can also set the electricity unit cost.

Smart M-Air

ANDROID APP ON Google play
Available on the App Store

Search for "Smart M-Air" from the GooglePlayTM store for AndroidTM and AppStore for iPhone.

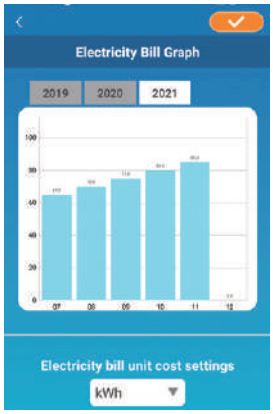


## Elegant timeless design

- Simple yet an elegant, deigned by an Italian designing company.
- When the unit is mounted the intake will be partially hidden.
- Small in size (compared to ZR series)

## New remote control

- Simple design and easy to use
- Temperature controlled in 0.5°C units
- Easy to see with backlight

R32

# SINGLE-SPLIT WALL MOUNTED TYPE

Standard Series

# SRK-ZSP-W

SRK25ZSP-W, SRK35ZSP-W, SRK45ZSP-W, SRK50ZSP-W

Wireless remote control

SRC25ZSP-W, SRC35ZSP-W

SRC45ZSP-W, SRC50ZSP-W

## KEY FEATURES

- The compact design of the ZSP series makes it perfect for small spaces such as spare bedrooms and home offices.
- Energy class improvement. All class A++.
- Low Global Warming Potential (GWP) and High energy efficiency by new refrigerant R32.
- The compact and lightweight design of outdoor unit offers great installation flexibility.
- Self-cleaning operation helps keep the room air clean.

## SPECIFICATIONS

| Indoor unit | | | | SRK25ZSP-W | SRK35ZSP-W | SRK45ZSP-W | SRK50ZSP-W |
|---|---|---|---|---|---|---|---|
| Outdoor unit | | | | SRC25ZSP-W | SRC35ZSP-W | SRC45ZSP-W | SRC50ZSP-W |
| Power source | | | | 1 Phase, 220 - 240V, 50Hz | | | |
| Nominal cooling capacity (Min~Max) | | | kW | 2.5(0.9~3.1) | 3.2(0.9~3.7) | 4.5(1.3~4.8) | 5.0(1.3~5.2) |
| Nominal heating capacity (Min~Max) | | | kW | 2.8(1.0~4.1) | 3.6(1.0~4.6) | 5.0(1.2~5.8) | 5.6(1.2~5.8) |
| Power consumption | | Cooling/Heating | kW | 0.710 / 0.690 | 0.910 / 0.930 | 1.350 / 1.360 | 1.740 / 1.660 |
| EER/COP | | Cooling/Heating | | 3.52/4.05 | 3.52 / 3.87 | 3.33 / 3.68 | 2.87 / 3.37 |
| Max. running current | | | A | 9 | 9 | 14.5 | 14.5 |
| Sound power level | Indoor | Cooling/Heating | dB(A) | 57 / 57 | 58 / 58 | 56 / 62 | 59 / 63 |
| | Outdoor | Cooling/Heating | | 57 / 56 | 59 / 60 | 63 / 64 | 65 / 66 |
| Sound pressure level | Indoor | Cooling (Hi/Me/Lo) | | 45 / 34 / 23 | 45 / 36 / 23 | 44 / 39 / 24 | 46 / 39 / 24 |
| | | Heating (Hi/Me/Lo) | | 43 / 34 / 26 | 44 / 36 / 28 | 48 / 41 / 30 | 48 / 41 / 30 |
| | Outdoor | Cooling/Heating | | 47 / 45 | 48 / 48 | 51 / 51 | 52 / 52 |
| Air flow | Indoor | Cooling (Hi/Me/Lo) | $m^3$/min | 10.0 / 7.3 / 4.2 | 9.5 / 6.8 / 4.2 | 9.0 / 7.2 / 3.8 | 9.9/ 7.2 / 3.8 |
| | | Heating (Hi/Me/Lo) | | 9.5 / 7.3 / 5.2 | 9.6 / 7.4 / 5.5 | 12.0 / 9.2 / 6.2 | 12.0 / 9.2 / 6.2 |
| | Outdoor | Cooling/Heating | | 23.7 / 19.7 | 22.8 / 22.0 | 35.6 / 33.4 | 37.7 / 35.6 |
| Exterior dimensions | Indoor | HeightxWidthxDepth | mm | 267 x 783 x 210 | | | |
| | Outdoor | | | 540 x 645(+57) x 275 | | 595 x 780(+62) x 290 | |
| Net weight | Indoor / Outdoor | | kg | 7.0 / 26.5 | 7.0 / 28.5 | 7.5 / 36.0 | |
| Refrigerant | | Type/GWP | | R32 / 675 | | | |
| | | Charge | kg/$TCO_2Eq$ | 0.550 / 0.371 | 0.68 / 0.459 | 1.10 / 0.743 | |
| Refrigerant piping size | | Liquid/Gas | ø mm | 6.35(1/4") / 9.52(3/8") | | 6.35(1/4") / 12.7(1/2") | |
| Refrigerant line (one way) length [chargeless length] | | | m | Max. 15 [10] | Max. 15 [Not required] | Max. 25 [15] | |
| Vertical height differences | | Outdoor is higher/lower | m | Max. 10 / Max. 10 | | Max. 15 / Max. 15 | |
| Outdoor operating temperature range | | Cooling | ˚CDB | -15~46 | | | |
| | | Heating | | -15~24 | | | |
| Clean filter | | | | — | | | |

- The data are measured under the following conditions(ISO-T1, H1). Cooling: Indoor temp. of 27˚CDB, 19˚CWB, and outdoor temp. of 35˚CDB. Heating: Indoor temp. of 20˚CDB, and outdoor temp. of 7˚CDB, 6˚CWB.
- Sound level indicates the value in an anechoic chamber. During operation these values are somewhat higher due to ambient conditions.
- 'tonne(s) of $CO_2$ equivalent' means a quantity of greenhouse gases- expressed as the product of the weight of the greenhouse gases in metric tonnes and of their global warming potential.

# SINGLE-SPLIT FLOOR STANDING TYPE

# SRF-ZS/ZSX

SRF25ZS-W, SRF35ZS-W,
SRF50ZSX-W

## Auto air outlet selection

In case both lower and upper air outlets can be selected.

## Installation workability

Piping and drain hose connection can be selected out of 6-directions.

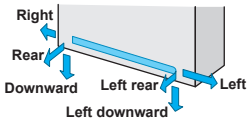

Wireless
remote control

SRC25ZS-W2, SRC35ZS-W2

SRC50ZSX-W2

## KEY FEATURES

- The elegant semi flat front panel in stylish white, fit various kinds of rooms and create relaxing atmosphere.
- Choice from wall hanging, floor standing or behind gallery installation is available.
- Low Global Warming Potential (GWP) and High energy efficiency by new refrigerant R32.
- Quiet Operation. The level of 25ZS-W in the cooling Ulo mode is only 25dB(A).
- The “flap control system” allows users to change flap angles and positions according to their preference. Flaps can be set at different angles.
- Allergen clear filter is equipped as a default.

## SPECIFICATIONS

| Indoor unit | | | | SRF25ZS-W | SRF35ZS-W | SRF50ZSX-W |
|---|---|---|---|---|---|---|
| Outdoor unit | | | | SRC25ZS-W2 | SRC35ZS-W2 | SRC50ZSX-W2 |
| Power source | | | | 1 Phase, 220 - 240V, 50Hz | | |
| Nominal cooling capacity (Min~Max) | | | kW | 2.5 (0.9~3.1) | 3.5 (0.9~4.1) | 5.0 (1.1~5.6) |
| Nominal heating capacity (Min~Max) | | | kW | 2.9 (0.8~3.7) | 4.5 (0.8~5.2) | 6.0 (0.8~7.4) |
| Power consumption | | Cooling/Heating | kW | 0.59 / 0.66 | 0.82 / 1.12 | 1.32 / 1.58 |
| EER/COP | | Cooling/Heating | | 4.24 / 4.39 | 4.27 / 4.02 | 3.79 / 3.80 |
| Max. running current | | | A | 9 | 9 | 9 |
| Sound power level | Indoor | Cooling/Heating | dB(A) | 50 / 51 | 51 / 52 | 58 / 58 |
| | Outdoor | Cooling/Heating | | 59 / 60 | 63 / 64 | 63 / 62 |
| Sound pressure level | Indoor | Cooling (Hi/Me/Lo/Ulo) | | 38 / 32 / 29 / 25 | 40 / 35 / 33 / 29 | 46 / 38 / 33 / 28 |
| | | Heating (Hi/Me/Lo/Ulo) | | 39 / 35 / 33 / 29 | 41 / 36 / 35 / 33 | 46 / 41 / 38 / 32 |
| | Outdoor | Cooling/Heating | | 45 / 47 | 50 / 51 | 51 / 51 |
| Air flow | Indoor | Cooling (Hi/Me/Lo/Ulo) | $m^3$/min | 9.0 / 7.6 / 6.7 / 5.8 | 9.2 / 7.8 / 7.3 / 6.4 | 11.5 / 9.6 / 7.4 / 6.6 |
| | | Heating (Hi/Me/Lo/Ulo) | | 10.5 / 8.2 / 7.7 /6.6 | 10.7 / 8.3 / 8.1 / 7.4 | 12.0 / 10.0 / 9.4 / 7.6 |
| | Outdoor | Cooling/Heating | | 27.4 / 27.4 | 31.5 / 31.5 | 39.0 / 33.0 |
| Exterior dimensions | Indoor | HeightxWidthxDepth | mm | 600 x 860 x 238 | | |
| | Outdoor | | | 540 x 780(+62) x 290 | | 640 x 800(+71) x 290 |
| Net weight | Indoor / Outdoor | | kg | 18.0 / 31.0 | 19.0 / 34.5 | 19.0 / 45.0 |
| Refrigerant | | Type/GWP | | R32 / 675 | | |
| | | Charge | kg/$TCO_2Eq$ | 0.62/0.419 | 0.78/0.527 | 1.30 / 0.878 |
| Refrigerant piping size | | Liquid/Gas | ø mm | 6.35(1/4") / 9.52(3/8") | | 6.35(1/4") / 12.7(1/2") |
| Refrigerant line (one way) length[chargeless length] | | | m | Max. 20 [10] | Max. 20 [15] | Max. 30 [15] |
| Vertical height differences | | Outdoor is higher/lower | m | Max. 10 / Max. 10 | | Max. 20 / Max. 20 |
| Outdoor operating temperature range | | Cooling | ˚CDB | -15~46 | | |
| | | Heating | | -15~24 | | -20~24 |
| Clean filter | | | | Allergen Clear Filter x 1 Photocatalytic Washable Deodorising Filter x 1 | | |

- The data are measured under the following conditions(ISO-T1, H1). Cooling: Indoor temp. of 27˚CDB, 19˚CWB, and outdoor temp. of 35˚CDB. Heating: Indoor temp. of 20˚CDB, and outdoor temp. of 7˚CDB, 6˚CWB.
- Sound level indicates the value in an anechoic chamber. During operation these values are somewhat higher due to ambient conditions.
- ‘tonne(s) of $CO_2$ equivalent’ means a quantity of greenhouse gases- expressed as the product of the weight of the greenhouse gases in metric tonnes and of their global warming potential.

# SINGLE-SPLIT CEILING CONCEALED TYPE

# SRR-ZS

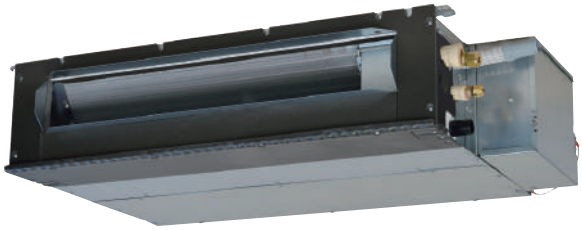

SRR25ZS-W, SRR35ZS-W

## Enhanced Installation Workability

600mm Drain Pump is mounted in all models. The indoor unit is completely hidden in the ceiling, so this is suitable for spaces with classy interior decoration.

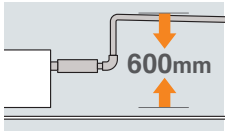


## Bottom air inlet kit (option)

UT-BAT1EF

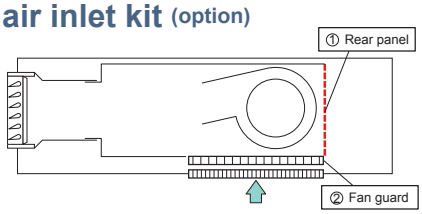

Wireless remote control

SRC25ZS-W2, SRC35ZS-W2

## KEY FEATURES

- The SRR series' indoor unit is concealed under the ceiling and is perfect a for a living room or bedroom area.
- Thin design, the height of SRR models is only 200mm.
- Low Global Warming Potential (GWP) and High energy efficiency by new refrigerant R32.
- Quiet Operation
- Low Static Pressure Level (35Pa)

## SPECIFICATIONS

| Indoor unit | | | | SRR25ZS-W | SRR35ZS-W |
|---|---|---|---|---|---|
| Outdoor unit | | | | SRC25ZS-W2 | SRC35ZS-W2 |
| Power source | | | | 1 Phase, 220 - 240V, 50Hz | |
| Nominal cooling capacity (Min~Max) | | | kW | 2.5 (0.9 ~ 3.2) | 3.5 (0.9 ~ 4.1) |
| Nominal heating capacity (Min~Max) | | | kW | 2.9 (0.9 ~ 4.4) | 4.2 (1.0 ~ 5.2) |
| Power consumption | | Cooling/Heating | kW | 0.62 / 0.65 | 0.93 / 1.01 |
| EER/COP | | Cooling/Heating | | 4.03 / 4.46 | 3.76 / 4.16 |
| Max. running current | | | A | 9 | 9 |
| Sound power level | Indoor | Cooling/Heating | dB(A) | 56 / 59 | 57 / 60 |
| | Outdoor | Cooling/Heating | | 58 / 58 | 62 / 62 |
| Sound pressure level | Indoor | Cooling (Hi/Me/Lo/Ulo) | | 37 / 33 / 30 / 24 | 38 / 34 / 31 / 25 |
| | | Heating (Hi/Me/Lo/Ulo) | | 40 / 37 / 34 / 28 | 42 / 38 / 35 / 29 |
| | Outdoor | Cooling/Heating | | 47 / 47 | 50 / 50 |
| Air flow | Indoor | Cooling (Hi/Me/Lo/Ulo) | $m^3$/min | 9.5 / 8.0 / 6.5 / 4.5 | 10.0 / 8.5 / 7.0 / 5.0 |
| | | Heating (Hi/Me/Lo/Ulo) | | 10.0 / 9.0 / 8.0 / 6.0 | 10.5 / 9.5 / 8.5 / 6.5 |
| | Outdoor | Cooling/Heating | | 27.4 / 23.6 | 31.5 / 27.8 |
| Available external static pressure | | | Pa | 35(Initial static pressure with air filter : 5Pa) | |
| Exterior dimensions | Indoor | HeightxWidthxDepth | mm | 200 x 750 x 500 | |
| | Outdoor | | | 540 x 780(+62) x 290 | |
| Net weight | Indoor / Outdoor | | kg | 20.5 / 31.0 | 20.5 / 34.5 |
| Refrigerant | | Type/GWP | | R32 / 675 | |
| | | Charge | kg/$TCO_2Eq$ | 0.62 / 0.419 | 0.78 / 0.527 |
| Refrigerant piping size | | Liquid/Gas | ø mm | 6.35(1/4") / 9.52(3/8") | |
| Refrigerant line (one way) length[chargeless length] | | | m | Max. 20 [15] | |
| Vertical height differences | | Outdoor is higher/lower | m | Max. 10 / Max.10 | |
| Outdoor operating temperature range | | Cooling | ˚CDB | -15~46 | |
| | | Heating | | -15~24 | |
| Bottom air inlet kit (option) | | | | UT-BAT1EF | |

- The data are measured under the following conditions(ISO-T1, H1). Cooling: Indoor temp. of 27˚CDB, 19˚CWB, and outdoor temp. of 35˚CDB. Heating: Indoor temp. of 20˚CDB, and outdoor temp. of 7˚CDB, 6˚CWB.
- Sound level indicates the value in an anechoic chamber. During operation these values are somewhat higher due to ambient conditions.
- 'tonne(s) of $CO_2$ equivalent' means a quantity of greenhouse gases- expressed as the product of the weight of the greenhouse gases in metric tonnes and of their global warming potential.

R32

# SINGLE-SPLIT 4WAY CEILING CASSETTE TYPE

# FDTC-VH

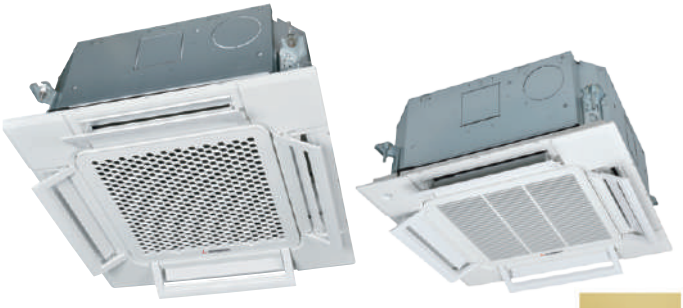

FDTC25VH1, FDTC35VH1,
FDTC40VH, FDTC50VH, FDTC60VH

A'DESIGN AWARD WINNER 2019 GOLD

## European Design & Flat Panel

A grille designed with a unique structure and a clean white panel that blends with the room.

Honeycomb type

Grid type

**Wired remote control (option)**

RC-EX3A

RC-E5

RCH-E3

**Wireless remote control (option)**

RCN-TC-5AW -E3

**Motion sensor (option)**

LB-TC-5W-E

## KEY FEATURES

- European grill design invented by Zweigrad GmbH & Co. KG in Germany, that blends well with the room.
- Height of the thin panel and the main body is only 248mm allowing a very easy installation. Integrated ceiling system design (600×600)
- Low Global Warming Potential (GWP) and high energy efficiency by new refrigerant R32.
- Draft Prevention Panel (optional) prevents cold/hot draft from being blown directly on the user. Draft Prevention Panel could be installed for each air outlet.
- Motion sensor (optional) is an energy saving operation function that detects human movement and saves energy.
- Noise has been reduced by adopting a new turbo fan and improving the heat exchanger.

SRC25ZS-W2, SRC35ZS-W2

SRC40ZSX-W1, SRC50ZSX-W2,
SRC60ZSX-W1

## SPECIFICATIONS

| Indoor unit | | | | FDTC25VH1 | FDTC35VH1 | FDTC40VH | FDTC50VH | FDTC60VH |
|---|---|---|---|---|---|---|---|---|
| Outdoor unit | | | | SRC25ZS-W2 | SRC35ZS-W2 | SRC40ZSX-W1 | SRC50ZSX-W2 | SRC60ZSX-W1 |
| Power source | | | | 1 Phase, 220 - 240V, 50Hz | | | | |
| Nominal cooling capacity (Min~Max) | | | kW | 2.5 ( 0.9~ 3.2 ) | 3.5 ( 0.9 ~ 4.3 ) | 4.0 ( 1.1 ~ 4.7 ) | 5.0 ( 1.1 ~ 5.6 ) | 5.6 ( 1.1 ~ 6.3 ) |
| Nominal heating capacity (Min~Max) | | | kW | 2.9 ( 0.9 ~ 4.0 ) | 4.25 ( 0.9 ~ 4.6 ) | 4.5 ( 0.6 ~ 5.4 ) | 5.4 ( 0.6 ~ 6.3 ) | 6.7 ( 0.6 ~ 6.7 ) |
| Power consumption | | Cooling/Heating | kW | 0.61 / 0.71 | 0.91 / 1.15 | 0.98 / 1.13 | 1.40 / 1.53 | 1.73 / 2.14 |
| EER/COP | | Cooling/Heating | | 4.10 / 4.08 | 3.85 / 3.70 | 4.08 / 3.98 | 3.58 / 3.53 | 3.23 / 3.13 |
| Max. running current | | | A | 9 | 9 | 15 | 15 | 15 |
| Sound power level | Indoor | Cooling/Heating | dB(A) | 51 / 52 | 52 / 53 | 59 / 59 | 59 / 59 | 60 / 60 |
| | Outdoor | Cooling/Heating | | 58 / 59 | 62 / 62 | 63 / 62 | 63 / 62 | 65 / 65 |
| Sound pressure level | Indoor | Cooling (P-Hi/Hi/Me/Lo) | | 38 / 34 / 30 / 27 | 39 / 36 / 32 / 29 | 44 / 40 / 35 / 27 | 44 / 40 / 35 / 27 | 46 / 42 / 38 / 31 |
| | | Heating (P-Hi/Hi/Me/Lo) | | 39 / 36 / 32 / 28 | 41 / 38 / 34 / 30 | 44 / 40 / 35 / 27 | 44 / 40 / 35 / 27 | 46 / 42 / 38 / 31 |
| | Outdoor | Cooling/Heating | | 47 / 47 | 50 / 50 | 52 / 50 | 52 / 50 | 53 / 54 |
| Air flow | Indoor | Cooling (P-Hi/Hi/Me/Lo) | $m^3$/min | 8.5 / 7.5 / 7.0 / 6.0 | 9.0 / 8.0 / 7.5 / 6.5 | 13 / 11 / 9 / 7 | 13 / 11 / 9 / 7 | 14 / 12 / 10 / 8 |
| | | Heating (P-Hi/Hi/Me/Lo) | | 9.5 / 8.5 / 7.5 / 6.5 | 10.0 / 9.0 / 8.0 / 7.0 | 13 / 11 / 9 / 7 | 13 / 11 / 9 / 8 | 14 / 12 / 10 / 8 |
| | Outdoor | Cooling/Heating | | 27.4 / 27.4 | 31.5 / 31.5 | 33 / 33 | 39 / 33 | 41.5 / 39 |
| Exterior dimensions | Indoor | HeightxWidthxDepth | mm | Unit : 248 x 570 x 570 Panel : 10 x 620 x 620 | | | | |
| | Outdoor | | | 540 x 780(+62) x 290 | | 640 x 800(+71) x 290 | | |
| Net weight | Indoor | | kg | 16.0 (Unit : 13.5 Panel : 2.5 ) | | 16.5 (Unit : 14 Panel : 2.5 ) | | |
| | Outdoor | | | 31.0 | 34.5 | 45.0 | | |
| Refrigerant | | Type/GWP | | R32 / 675 | | | | |
| | | Charge | kg/$TCO_2Eq$ | 0.62 / 0.419 | 0.78 / 0.527 | 1.30 / 0.878 | | |
| Refrigerant piping size | | Liquid/Gas | ø mm | 6.35(1/4") / 9.52(3/8") | | 6.35(1/4") / 12.7(1/2") | | |
| Refrigerant line (one way) length [chargeless length] | | | m | Max. 20 [15] | | Max. 30 [15] | | |
| Vertical height differences | | Outdoor is higher/lower | m | Max. 10 / Max.10 | | Max. 20 / Max.20 | | |
| Outdoor operating temperature range | | Cooling | ˚CDB | -15~46 | | | | |
| | | Heating | | -15~24 | | -20~24 | | |
| Panel | | | | Standard Panel : TC-PSA-5AW-E(Honeycomb), TC-PSAG-5AW-E(Grid)<br>Draft Prevention Panel : TC-PSAE-5AW-E(Honeycomb), TC-PSAGE-5AW-E(Grid) | | | | |

- The data are measured under the following conditions(ISO-T1, H1). Cooling: Indoor temp. of 27˚CDB, 19˚CWB, and outdoor temp. of 35˚CDB. Heating: Indoor temp. of 20˚CDB, and outdoor temp. of 7˚CDB, 6˚CWB.
- Sound level indicates the value in an anechoic chamber. During operation these values are somewhat higher due to ambient conditions.
- 'tonne(s) of $CO_2$ equivalent' means a quantity of greenhouse gases- expressed as the product of the weight of the greenhouse gases in metric tonnes and of their global warming potential.

R410A

# SINGLE-SPLIT WALL MOUNTED TYPE

Diamond Series

# SRK-ZSX-S

**SRK20ZSX-S, SRK25ZSX-S, SRK35ZSX-S**
**SRK50ZSX-S, SRK60ZSX-S**

A'DESIGN AWARD WINNER 2017 SILVER

M-Air

**Wireless Control System (option)**

**Wireless remote control**

**SRC20ZSX-S, SRC25ZSX-S, SRC35ZSX-S, SRC50ZSX-S, SRC60ZSX-S**

## KEY FEATURES

- Elegant Timeless Design.
- High seasonal efficiency performance is up to A$^{+++}$ in cooling and heating.
- Quiet Air Flow & Long Reach is achieved by jet technology.
- Allergen clear operation cleans air, using a control scheme owned only by Mitsubishi Heavy Industries Thermal Systems.
- Wireless interface control (optional) .

## SPECIFICATIONS

| Indoor unit | | | | SRK20ZSX-S | SRK25ZSX-S | SRK35ZSX-S | SRK50ZSX-S | SRK60ZSX-S |
|---|---|---|---|---|---|---|---|---|
| Outdoor unit | | | | SRC20ZSX-S | SRC25ZSX-S | SRC35ZSX-S | SRC50ZSX-S | SRC60ZSX-S |
| Power source | | | | 1Phase, 220 - 240, 50Hz | | | | |
| Nominal cooling capacity (Min~Max) | | | kW | 2.0 (0.9~3.2) | 2.5 (0.9~3.7) | 3.5 (0.9~4.3) | 5.0 (1.0~5.8) | 6.1 (1.0~6.8) |
| Nominal heating capacity (Min~Max) | | | kW | 2.7 (0.8~5.3) | 3.2 (0.8~5.8) | 4.3 (0.8~6.6) | 6.0 (0.6~8.1) | 6.8 (0.6~8.7) |
| Power consumption | | Cooling/Heating | kW | 0.32 / 0.47 | 0.44 / 0.59 | 0.78 / 0.90 | 1.30 / 1.36 | 1.81 / 1.67 |
| EER/COP | | Cooling/Heating | | 6.25 / 5.74 | 5.68 / 5.42 | 4.49 / 4.78 | 3.85 / 4.41 | 3.37 / 4.07 |
| Max. running current | | | A | 9 | 9 | 9 | 15 | 15 |
| Sound power level | Indoor | Cooling/Heating | dB(A) | 53 / 53 | 55 / 56 | 58 / 58 | 59 / 62 | 62 / 63 |
| | Outdoor | Cooling/Heating | | 56 / 58 | 57 / 58 | 61 / 62 | 63 / 63 | 65 / 64 |
| Sound pressure level | Indoor | Cooling (Hi/Me/Lo/Ulo) | | 38 / 31 / 24 / 19 | 39 / 33 / 25 / 19 | 43 / 35 / 26 / 19 | 44 / 39 / 31 / 22 | 46 / 41 / 33 / 22 |
| | | Heating (Hi/Me/Lo/Ulo) | | 38 / 32 / 25 / 19 | 40 / 34 / 27 / 19 | 41 / 35 / 28 / 19 | 46 / 41 / 33 / 23 | 46 / 42 / 34 / 23 |
| | Outdoor | Cooling/Heating | | 43 / 44 | 44 / 45 | 48 / 47 | 50 / 49 | 52 / 52 |
| Air flow | Indoor | Cooling (Hi/Me/Lo/Ulo) | $m^3$/min | 11.3 / 9.1 / 6.0 / 5.0 | 12.2 / 10.0 / 6.7 / 5.0 | 13.1 / 10.8 / 7.3 / 5.0 | 14.3 / 12.4 / 7.8 / 5.4 | 16.3 / 13.4 / 8.9 / 5.4 |
| | | Heating (Hi/Me/Lo/Ulo) | | 12.2 / 10.3 / 7.2 / 5.4 | 12.8 / 11.0 / 7.8 / 5.4 | 13.9 / 11.8 / 8.6 / 5.4 | 17.3 / 14.3 / 9.8 / 6.2 | 17.8 / 13.7 / 10.9 / 6.2 |
| | Outdoor | Cooling/Heating | | 31.0 / 31.0 | 31.0 / 31.0 | 36.0 / 31.0 | 39.0 / 33.0 | 41.5 / 39.0 |
| Exterior dimensions | Indoor | HeightxWidthxDepth | mm | 305 x 920 x 220 | | | | |
| | Outdoor | | | 640 x 800(+71) x 290 | | | | |
| Net weight | Indoor / Outdoor | | kg | 13.0 / 43.0 | | | 13.0 / 45.0 | |
| Refrigerant | | Type/GWP | | R410A / 2088 | | | | |
| | | Charge | kg/TCO$_2$Eq | 1.45 / 3.028 | | | 1.50 / 3.132 | |
| Refrigerant piping size | | Liquid/Gas | ø mm | 6.35(1/4") / 9.52(3/8") | | | 6.35(1/4") / 12.7(1/2") | |
| Refrigerant line (one way) length [chargeless length] | | | m | Max.25 [15] | | | Max.30 [15] | |
| Vertical height differences | | Outdoor is higher/lower | m | Max.15 / Max.15 | | | Max.20 / Max.20 | |
| Outdoor operating temperature range | | Cooling | ˚CDB | -15~46 | | | | |
| | | Heating | | -20~24 | | | | |
| Clean filter | | | | Allergen Clear Filter x 1, Photocatalytic Washable Deodorising Filter x 1 | | | | |

- The data are measured under the following conditions(ISO-T1, H1). Cooling: Indoor temp. of 27˚CDB, 19˚CWB, and outdoor temp. of 35˚CDB. Heating: Indoor temp. of 20˚CDB, and outdoor temp. of 7˚CDB, 6˚CWB.
- Sound level indicates the value in an anechoic chamber.During operation these values are somewhat higher due to ambient conditions.
- 'tonne(s) of $CO_2$ equivalent' means a quantity of greenhouse gases- expressed as the product of the weight of the greenhouse gases in metric tonnes and of their global warming potential.

R410A

# SINGLE-SPLIT WALL MOUNTED TYPE

Diamond Series

# SRK-ZR-S

SRK63ZR-S, SRK71ZR-S, SRK80ZR-S, SRK100ZR-S

M-Air

Wireless Control System (option)

Wireless remote control

SRC63ZR-S

SRC71ZR-S, SRC80ZR-S

FDC100VNP

## KEY FEATURES

- All models has high energy class A++.
- Quiet Air Flow & Long Reach is achieved by jet technology.
- Allergen clear operation cleans air, using a control scheme owned only by Mitsubishi Heavy Industries Thermal Systems.
- Wireless interface control (optional) .

## SPECIFICATIONS

| Indoor unit | | | | SRK63ZR-S | SRK71ZR-S | SRK80ZR-S | SRK100ZR-S |
|---|---|---|---|---|---|---|---|
| Outdoor unit | | | | SRC63ZR-S | SRC71ZR-S | SRC80ZR-S | FDC100VNP |
| Power source | | | | 1 Phase, 220 - 240V, 50Hz | | | |
| Nominal cooling capacity (Min~Max) | | | kW | 6.3 (1.2~7.1) | 7.1 (2.3~7.7) | 8.0 (2.3~9.0) | 10.0 (2.4~10.5) |
| Nominal heating capacity (Min~Max) | | | kW | 7.1 (0.8~9.0) | 8.0 (2.0~10.0) | 9.0 (2.1~10.5) | 11.2 (3.2~11.5) |
| Power consumption | | Cooling/Heating | kW | 1.85 / 1.74 | 2.05 / 2.06 | 2.35 / 2.40 | 3.09 / 3.28 |
| EER/COP | | Cooling/Heating | | 3.41 / 4.08 | 3.46 / 3.88 | 3.40 / 3.75 | 3.24 / 3.41 |
| Max. running current | | | A | 14.5 | 17 | 17 | 21 |
| Sound power level | Indoor | Cooling/Heating | dB(A) | 58 / 58 | 58 / 60 | 62 / 62 | 63 / 63 |
| | Outdoor | Cooling/Heating | | 67 / 66 | 65 / 63 | 68 / 67 | 70 / 74 |
| Sound pressure level | Indoor | Cooling (Hi/Me/Lo/Ulo) | | 44 / 39 / 35 / 25 | 44 / 41 / 37 / 25 | 47 / 44 / 39 / 26 | 48 / 45 / 40 / 27 |
| | | Heating (Hi/Me/Lo/Ulo) | | 44 / 38 / 34 / 28 | 46 / 39 / 35 / 28 | 47 / 41 / 36 / 29 | 48 / 43 / 38 / 30 |
| | Outdoor | Cooling/Heating | | 54 / 54 | 53 / 51 | 56 / 55 | 57 / 61 |
| Air flow | Indoor | Cooling (Hi/Me/Lo/Ulo) | $m^3$/min | 20.5 / 18.1 / 15.7 / 10.4 | 20.5 / 18.6 / 16.2 / 10.4 | 23.5 / 20.2 / 17.5 / 10.4 | 24.5 / 21.3 / 17.6 / 10.4 |
| | | Heating (Hi/Me/Lo/Ulo) | | 23.5 / 19.0 / 16.5 / 13.1 | 25.5 / 19.8 / 17.3 / 13.3 | 26.5 / 21.3 / 18.4 / 13.5 | 27.5 / 23.2 / 19.1 / 13.6 |
| | Outdoor | Cooling/Heating | | 41.5 / 41.5 | 55 / 43.5 | 63 / 49.5 | 75 / 80 |
| Exterior dimensions | Indoor | HeightxWidthxDepth | mm | 339 x 1197 x 262 | | | |
| | Outdoor | | | 640 x 800(+71) x 290 | 750 x 880(+88) x 340 | | 845 x 970 x 370 |
| Net weight | Indoor / Outdoor | | kg | 15.5 / 45.0 | 15.5 / 57.0 | 16.5 / 58.5 | 16.5 / 70.0 |
| Refrigerant | | Type/GWP | | R410A / 2088 | | | |
| | | Charge | kg/$TCO_2Eq$ | 1.55 / 3.236 | 1.8 / 3.758 | 1.9 / 3.967 | 2.55 / 5.324 |
| Refrigerant piping size | | Liquid/Gas | ø mm | 6.35(1/4") / 12.7(1/2") | 6.35(1/4") / 15.88(5/8") | | 9.52(3/8") / 15.88(5/8") |
| Refrigerant line (one way) length [chargeless length] | | | m | Max.30 [15] | | | |
| Vertical height differences | | Outdoor is higher/lower | m | Max.20 / Max.20 | | | |
| Outdoor operating temperature range | | Cooling | ˚CDB | -15~46 | | | |
| | | Heating | | -15~24 | | | |
| Clean filter | | | | Allergen Clear Filter x 1, Photocatalytic Washable Deodorising Filter x 1 | | | |

- The data are measured under the following conditions(ISO-T1, H1). Cooling: Indoor temp. of 27˚CDB, 19˚CWB, and outdoor temp. of 35˚CDB. Heating: Indoor temp. of 20˚CDB, and outdoor temp. of 7˚CDB, 6˚CWB.
- Sound level indicates the value in an anechoic chamber. During operation these values are somewhat higher due to ambient conditions.
- 'tonne(s) of $CO_2$ equivalent' means a quantity of greenhouse gases- expressed as the product of the weight of the greenhouse gases in metric tonnes and of their global warming potential.

R410A

# SINGLE-SPLIT WALL MOUNTED TYPE

Premium Series

# SRK-ZS-S

**SRK20ZS-S, SRK25ZS-S, SRK35ZS-S, SRK50ZS-S** Pure White(-S)

M-Air

## Colour variation available

Users can choose their favorite colour from three choices.

Black & White (-WB)

Titanium (-WT)

**Wireless Control System (option)**

**Wireless remote control**

**SRC20ZS-S, SRC25ZS-S SRC35ZS-S**

**SRC50ZS-S**

## KEY FEATURES

- Elegant timeless design. Pick from three different colour choices.
- Quiet Air Flow & Long Reach is achieved by jet technology.
- Allergen clear operation cleans air, using a control scheme owned only by Mitsubishi Heavy Industries Thermal Systems.
- Wireless interface control (optional) .

## SPECIFICATIONS

| Indoor unit | | | | SRK20ZS-S,-SB,-ST | SRK25ZS-S,-SB,-ST | SRK35ZS-S,-SB,-ST | SRK50ZS-S,-SB,-ST |
|---|---|---|---|---|---|---|---|
| Outdoor unit | | | | SRC20ZS-S | SRC25ZS-S | SRC35ZS-S | SRC50ZS-S |
| Power source | | | | 1 Phase, 220 - 240V, 50Hz | | | |
| Nominal cooling capacity (Min~Max) | | | kW | 2.0(1.0~2.8) | 2.5(1.0~3.0) | 3.5(1.0~3.8) | 5.0(1.7~5.5) |
| Nominal heating capacity (Min~Max) | | | kW | 2.7(0.9~4.2) | 3.2(0.9~4.4) | 4.0(0.9~4.8) | 5.8(1.6~6.6) |
| Power consumption | | Cooling/Heating | kW | 0.44 / 0.62 | 0.62 / 0.80 | 1.01 / 1.00 | 1.56 / 1.59 |
| EER/COP | | Cooling/Heating | | 4.55 / 4.35 | 4.03 / 4.00 | 3.47 / 4.00 | 3.21 / 3.65 |
| Max. running current | | | A | 9 | 9 | 9 | 14.5 |
| Sound power level | Indoor | Cooling/Heating | dB(A) | 50 / 52 | 52 / 55 | 56 / 58 | 58 / 59 |
| | Outdoor | Cooling/Heating | | 57 / 57 | 58 / 58 | 62 / 61 | 62 / 63 |
| Sound pressure level | Indoor | Cooling (Hi/Me/Lo/Ulo) | | 34 / 25 / 22 / 19 | 36 / 28 / 23 / 19 | 40 / 30 / 26 / 19 | 45 / 36 / 28 / 22 |
| | | Heating (Hi/Me/Lo/Ulo) | | 36 / 29 / 23 / 19 | 39 / 30 / 24 / 19 | 41 / 36 / 25 / 19 | 45 / 37 / 31 / 24 |
| | Outdoor | Cooling/Heating | | 45 / 45 | 46 / 46 | 50 / 48 | 51 / 53 |
| Air flow | Indoor | Cooling (Hi/Me/Lo/Ulo) | $m^3$/min | 9.3 / 7.0 / 5.9 / 5.0 | 9.9 / 8.0 / 5.9 / 5.0 | 11.3 / 8.7 / 7.0 / 5.0 | 12.1 / 9.9 / 7.4 / 5.9 |
| | | Heating (Hi/Me/Lo/Ulo) | | 10.0 / 8.5 / 6.5 / 5.9 | 11.3 / 8.7 / 6.7 / 5.9 | 12.3 / 11.0 / 7.0 / 5.9 | 13.9 / 11.2 / 9.1 / 7.4 |
| | Outdoor | Cooling/Heating | | 27.4 / 23.6 | 27.4 / 23.6 | 31.5 / 27.8 | 32.8 / 32.8 |
| Exterior dimensions | Indoor | HeightxWidthxDepth | mm | 290 x 870 x 230 | | | |
| | Outdoor | | | 540 x 780(+62) x 290 | | | 595 x 780(+62) x 290 |
| Net weight | Indoor / Outdoor | | kg | 9.5 / 31.5 | | 9.5 / 34.5 | 10.0 / 36.5 |
| Refrigerant | | Type/GWP | | R410A / 2088 | | | |
| | | Charge | kg/$TCO_2Eq$ | 0.75 / 1.566 | | 0.95 / 1.984 | 1.25 / 2.61 |
| Refrigerant piping size | | Liquid/Gas | ø mm | 6.35(1/4") / 9.52(3/8") | | | 6.35(1/4") / 12.7(1/2") |
| Refrigerant line (one way) length [chargeless length] | | | m | Max. 20 [15] | | | Max. 25 [15] |
| Vertical height differences | | Outdoor is higher/lower | m | Max. 10 / Max. 10 | | | Max. 15 / Max. 15 |
| Outdoor operating temperature range | | Cooling | ˚CDB | -15~46 | | | |
| | | Heating | | -15~24 | | | |
| Clean filter | | | | Allergen Clear Filter x 1, Photocatalytic Washable Deodorising Filter x 1 | | | |

- The data are measured under the following conditions(ISO-T1, H1). Cooling: Indoor temp. of 27˚CDB, 19˚CWB, and outdoor temp. of 35˚CDB. Heating: Indoor temp. of 20˚CDB, and outdoor temp. of 7˚CDB, 6˚CWB.
- Sound level indicates the value in an anechoic chamber. During operation these values are somewhat higher due to ambient conditions.
- 'tonne(s) of $CO_2$ equivalent' means a quantity of greenhouse gases- expressed as the product of the weight of the greenhouse gases in metric tonnes and of their global warming potential.

R410A

# SINGLE-SPLIT WALL MOUNTED TYPE

Standard Series

# SRK-ZSP-S

SRK25ZSP-S, SRK35ZSP-S, SRK45ZSP-S

Wireless remote control

SRC25ZSP-S, SRC35ZSP-S

SRC45ZSP-S

## KEY FEATURES

- ZSP series has an elegant design that fits into any kind of interior decoration.
- Compact and lightweight feature of outdoor unit offers great installation flexibility.
- Self-cleaning operation helps keep the room air clean.
- Useful timer function that can turn on and turn off the air conditioners in a pre-set time.

## SPECIFICATIONS

| Indoor unit | | | | SRK25ZSP-S | SRK35ZSP-S | SRK45ZSP-S |
|---|---|---|---|---|---|---|
| Outdoor unit | | | | SRC25ZSP-S | SRC35ZSP-S | SRC45ZSP-S |
| Power source | | | | 1 Phase, 220 - 240V, 50Hz | | |
| Nominal cooling capacity (Min~Max) | | | kW | 2.5(0.9~2.8) | 3.2(0.9~3.5) | 4.5(0.9~4.8) |
| Nominal heating capacity (Min~Max) | | | kW | 2.8(0.8~3.9) | 3.6(0.9~4.3) | 5.0(0.8~5.8) |
| Power consumption | | Cooling/Heating | kW | 0.78 / 0.755 | 0.995 / 0.995 | 1.495 / 1.385 |
| EER/COP | | Cooling/Heating | | 3.21/3.71 | 3.22 / 3.62 | 3.01 / 3.61 |
| Max. running current | | | A | 9 | 9 | 14 |
| Sound power level | Indoor | Cooling/Heating | dB(A) | 58 / 57 | 59 / 58 | 58 / 62 |
| | Outdoor | Cooling/Heating | | 58 / 59 | 60 / 60 | 63 / 64 |
| Sound pressure level | Indoor | Cooling (Hi/Me/Lo) | | 45 / 34 / 23 | 45 / 36 / 23 | 44 / 39 / 24 |
| | | Heating (Hi/Me/Lo) | | 43 / 34 / 26 | 44 / 36 / 28 | 48 / 41 / 30 |
| | Outdoor | Cooling/Heating | | 47 / 45 | 47 / 48 | 51 / 51 |
| Air flow | Indoor | Cooling (Hi/Me/Lo) | $m^3$/min | 10.0 / 7.3 / 4.2 | 9.5 / 6.8 / 4.2 | 9.0 / 7.2 / 3.8 |
| | | Heating (Hi/Me/Lo) | | 9.5 / 7.3 / 5.2 | 9.6 / 7.4 / 5.5 | 12.0 / 9.2 / 6.2 |
| | Outdoor | Cooling/Heating | | 26.0 / 19.7 | 25.4 / 20.5 | 35.5 / 33.5 |
| Exterior dimensions | Indoor | HeightxWidthxDepth | mm | 267 x 783 x 210 | | |
| | Outdoor | | | 540 x 645(+57) x 275 | | 595 x 780(+62) x 290 |
| Net weight | Indoor / Outdoor | | kg | 7.0 / 25.0 | 7.0 / 27.0 | 7.5 / 40.0 |
| Refrigerant | | Type/GWP | | R410A / 2088 | | |
| | | Charge | kg/$TCO_2Eq$ | 0.655 / 1.368 | 0.81 / 1.691 | 1.20 / 2.506 |
| Refrigerant piping size | | Liquid/Gas | ø mm | 6.35(1/4") / 9.52(3/8") | | 6.35(1/4") / 12.7(1/2") |
| Refrigerant line (one way) length [chargeless length] | | | m | Max. 15 [10] | Max. 15 [Not required] | Max. 25 [15] |
| Vertical height differences | | Outdoor is higher/lower | m | Max. 10 / Max. 10 | | Max. 15 / Max. 15 |
| Outdoor operating temperature range | | Cooling | ˚CDB | -15~46 | | |
| | | Heating | | -15~24 | | |
| Clean filter | | | | — | | |

- The data are measured under the following conditions(ISO-T1, H1). Cooling: Indoor temp. of 27˚CDB, 19˚CWB, and outdoor temp. of 35˚CDB. Heating: Indoor temp. of 20˚CDB, and outdoor temp. of 7˚CDB, 6˚CWB.
- Sound level indicates the value in an anechoic chamber. During operation these values are somewhat higher due to ambient conditions.
- 'tonne(s) of $CO_2$ equivalent' means a quantity of greenhouse gases- expressed as the product of the weight of the greenhouse gases in metric tonnes and of their global warming potential.

R410A

# SINGLE-SPLIT FLOOR STANDING TYPE

# SRF-ZMX

SRF25ZMX-S, SRF35ZMX-S, SRF50ZMX-S

## Auto air outlet selection

In case both lower and upper air outlets can be selected.

## Installation workability

Piping and drain hose connection can be selected out of 6-directions.

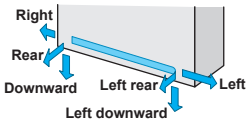

Wireless remote control

SRC25ZMX-S, SRC35ZMX-S

SRC50ZSX-S

## KEY FEATURES

- The elegant semi flat front panel in stylish white, fit various kinds of rooms and create relaxing atmosphere.
- Choice from wall hanging, floor standing or behind gallery installation.
- Quiet operation. By optimising the balance of the air outlet direction and the sufficient air flow volume, the sound level has been minimised.
- The "flap control system" allows users to change flap angles and positions according to their preference. Flaps can be set at different angles.
- Allergen clear filter is equipped as a default.

## SPECIFICATIONS

| Indoor unit | | | | SRF25ZMX-S | SRF35ZMX-S | SRF50ZMX-S |
|---|---|---|---|---|---|---|
| Outdoor unit | | | | SRC25ZMX-S | SRC35ZMX-S | SRC50ZSX-S |
| Power source | | | | 1 Phase, 220 - 240V, 50Hz | | |
| Nominal cooling capacity (Min~Max) | | | kW | 2.5 (0.9~3.2) | 3.5 (0.9~4.1) | 5.0 (1.1~5.2) |
| Nominal heating capacity (Min~Max) | | | kW | 3.4 (0.9~4.7) | 4.5 (0.9~5.1) | 6.0 (0.6~6.9) |
| Power consumption | | Cooling/Heating | kW | 0.521 / 0.723 | 0.890 / 1.124 | 1.390 / 1.540 |
| EER/COP | | Cooling/Heating | | 4.80 / 4.70 | 3.93 / 4.00 | 3.60 / 3.90 |
| Max. running current | | | A | 8 | 8 | 15 |
| Sound power level | Indoor | Cooling/Heating | dB(A) | 51 / 51 | 52 / 52 | 58 / 58 |
| | Outdoor | Cooling/Heating | | 60 / 60 | 63 / 62 | 63 / 62 |
| Sound pressure level | Indoor | Cooling (Hi/Me/Lo/Ulo) | | 40 / 32 / 30 / 26 | 41 / 34 / 33 / 28 | 46 / 42 / 35 / 32 |
| | | Heating (Hi/Me/Lo/Ulo) | | 40 / 35 / 33 / 28 | 41 / 36 / 35 / 31 | 47 / 41 / 39 / 33 |
| | Outdoor | Cooling/Heating | | 47 / 47 | 50 / 50 | 52 / 51 |
| Air flow | Indoor | Cooling (Hi/Me/Lo/Ulo) | $m^3$/min | 9.0 / 7.6 / 6.7 / 5.8 | 9.2 / 7.8 / 7.3 / 6.4 | 11.5 / 9.6 / 7.4 / 6.6 |
| | | Heating (Hi/Me/Lo/Ulo) | | 10.5 / 8.2 / 7.7 /6.6 | 10.7 / 8.3 / 8.1 / 7.4 | 12.0 / 10.0 / 9.4 / 7.6 |
| | Outdoor | Cooling/Heating | | 29.5 / 27.0 | 32.5 / 29.5 | 39.0 / 33.0 |
| Exterior dimensions | Indoor | HeightxWidthxDepth | mm | 600 x 860 x 238 | | |
| | Outdoor | | | 595 x 780(+62) x 290 | | 640 x 800(+71) x 290 |
| Net weight | Indoor / Outdoor | | kg | 18.0 / 35.0 | 19.0 / 35.0 | 19.0 / 45.0 |
| Refrigerant | | Type/GWP | | R410A / 2088 | | |
| | | Charge | kg/$TCO_2Eq$ | 1.2 / 2.506 | | 1.5 / 3.132 |
| Refrigerant piping size | | Liquid/Gas | ø mm | 6.35(1/4") / 9.52(3/8") | | 6.35(1/4") / 12.7(1/2") |
| Refrigerant line (one way) length [chargeless length] | | | m | Max. 15 [Not required] | | Max. 30 [15] |
| Vertical height differences | | Outdoor is higher/lower | m | Max. 10 / Max. 10 | | Max. 20 / Max. 20 |
| Outdoor operating temperature range | | Cooling | ˚CDB | -15~46 | | |
| | | Heating | | -15~24 | | -20~24 |
| Clean filter | | | | Allergen Clear Filter x 1 Photocatalytic Washable Deodorising Filter x 1 | | |

- The data are measured under the following conditions(ISO-T1, H1). Cooling: Indoor temp. of 27˚CDB, 19˚CWB, and outdoor temp. of 35˚CDB. Heating: Indoor temp. of 20˚CDB, and outdoor temp. of 7˚CDB, 6˚CWB.
- Sound level indicates the value in an anechoic chamber. During operation these values are somewhat higher due to ambient conditions.
- 'tonne(s) of $CO_2$ equivalent' means a quantity of greenhouse gases- expressed as the product of the weight of the greenhouse gases in metric tonnes and of their global warming potential.

R410A

# SINGLE-SPLIT CEILING CONCEALED TYPE

# SRR-ZM

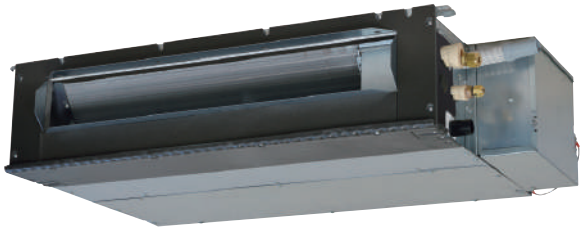

SRR25ZM-S, SRR35ZM-S

## Bottom air inlet kit (option)

UT-BAT1EF

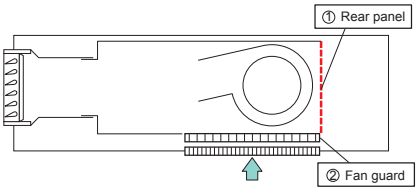

Wireless remote control

SRC25ZMX-S, SRC35ZMX-S

## KEY FEATURES

- Thin design, the height of all SRR models is only 200mm. The indoor unit is completely hidden in the ceiling, so this is suitable for spaces with classy interior decoration.
- Lower noise.
- Low Static Pressure Level (35Pa).
- The SRR series come with a built in drain pump.

## SPECIFICATIONS

| Indoor unit | | | | SRR25ZM-S | SRR35ZM-S |
|---|---|---|---|---|---|
| Outdoor unit | | | | SRC25ZMX-S | SRC35ZMX-S |
| Power source | | | | 1 Phase, 220 - 240V, 50Hz | |
| Nominal cooling capacity (Min~Max) | | | kW | 2.5 (1.0 ~ 3.3) | 3.5 (1.0 ~ 3.9) |
| Nominal heating capacity (Min~Max) | | | kW | 3.4 (1.4 ~ 4.8) | 4.2 (1.5 ~ 5.2) |
| Power consumption | | Cooling/Heating | kW | 0.570 / 0.750 | 0.980 / 1.030 |
| EER/COP | | Cooling/Heating | | 4.39 / 4.53 | 3.57 / 4.08 |
| Max. running current | | | A | 8 | 8 |
| Sound power level | Indoor | Cooling/Heating | dB(A) | 56 / 59 | 57 / 60 |
| | Outdoor | Cooling/Heating | | 60 / 60 | 62 / 62 |
| Sound pressure level | Indoor | Cooling (Hi/Me/Lo/Ulo) | | 37 / 33 / 30 / 24 | 38 / 34 / 31 / 25 |
| | | Heating (Hi/Me/Lo/Ulo) | | 40 / 37 / 34 / 28 | 41 / 38 / 35 / 29 |
| | Outdoor | Cooling/Heating | | 47 / 47 | 50 / 50 |
| Air flow | Indoor | Cooling (Hi/Me/Lo/Ulo) | $m^3$/min | 9.5 / 8.0 / 6.5 / 4.5 | 10.0 / 8.5 / 7.0 / 5.0 |
| | | Heating (Hi/Me/Lo/Ulo) | | 10.0 / 9.0 / 8.0 / 6.0 | 10.5 / 9.5 / 8.5 / 6.5 |
| | Outdoor | Cooling/Heating | | 29.5 / 27.0 | 32.5 / 29.5 |
| Available external static pressure | | | Pa | 35(Initial static pressure with air filter : 5Pa) | |
| Exterior dimensions | Indoor | HeightxWidthxDepth | mm | 200 x 750 x 500 | |
| | Outdoor | | | 595 x 780(+62) x 290 | |
| Net weight | Indoor / Outdoor | | kg | 20.5 / 35.0 | |
| Refrigerant | | Type/GWP | | R410A / 2088 | |
| | | Charge | kg/$TCO_2Eq$ | 1.2 / 2.506 | |
| Refrigerant piping size | | Liquid/Gas | ø mm | 6.35(1/4") / 9.52(3/8") | |
| Refrigerant line (one way) length[chargeless length] | | | m | Max. 15 [Not required] | |
| Vertical height differences | | Outdoor is higher/lower | m | Max. 10 / Max.10 | |
| Outdoor operating temperature range | | Cooling | ˚CDB | -15~46 | |
| | | Heating | | -15~24 | |
| Bottom air inlet kit (option) | | | | UT-BAT1EF | |

- The data are measured under the following conditions(ISO-T1, H1). Cooling: Indoor temp. of 27˚CDB, 19˚CWB, and outdoor temp. of 35˚CDB. Heating: Indoor temp. of 20˚CDB, and outdoor temp. of 7˚CDB, 6˚CWB.
- Sound level indicates the value in an anechoic chamber. During operation these values are somewhat higher due to ambient conditions.
- 'tonne(s) of $CO_2$ equivalent' means a quantity of greenhouse gases- expressed as the product of the weight of the greenhouse gases in metric tonnes and of their global warming potential.

R410A

# SINGLE-SPLIT 4WAY CEILING CASSETTE TYPE

# FDTC-VF

**FDTC25VF, FDTC35VF, FDTC40VF, FDTC50VF, FDTC60VF**

**Fits into standard 600x600 ceiling**

## Individual flap control system

According to room temperature conditions, four directions of air flow can be controlled by individual flap as preferred. Individual flap control is available even after installation.

## 600mm Drain Pump is mounted

Drain can be discharged upward by 600mm from the ceiling surface close to the indoor unit.
It allows a piping layout with a high degree of freedom depending on the installation location.

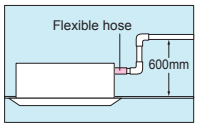


**Wired remote control (option)**

**RC-EX3A** **RC-E5** **RCH-E3**

**Wireless remote control (option)**

**RCN-TC-24W-E2**

**SRC25ZMX-S, SRC35ZMX-S**

**SRC40ZSX-S, SRC50ZSX-S, SRC60ZSX-S**

## KEY FEATURES

- Compact and extra thin design.
- The flap can swing within the range of upper and lower flap position selected with the wired remote control.
- For wireless control, simply insert the infrared receiver kit on the corner of the panel.
- FDTC-VF series come with a built in 600mm drain pumps.

## SPECIFICATIONS

| Indoor unit | | | | FDTC25VF | FDTC35VF | FDTC40VF | FDTC50VF | FDTC60VF |
|---|---|---|---|---|---|---|---|---|
| Outdoor unit | | | | SRC25ZMX-S | SRC35ZMX-S | SRC40ZSX-S | SRC50ZSX-S | SRC60ZSX-S |
| Power source | | | | 1 Phase, 220 - 240V, 50Hz | | | | |
| Nominal cooling capacity (Min~Max) | | | kW | 2.55 ( 0.9 ~ 3.2 ) | 3.6 ( 0.9 ~ 4.1 ) | 4.0 ( 1.1 ~ 4.7 ) | 5.0 ( 1.1 ~ 5.6 ) | 5.6 ( 1.1 ~ 6.3 ) |
| Nominal heating capacity (Min~Max) | | | kW | 3.45 ( 0.9 ~ 4.7 ) | 4.25 ( 0.9 ~ 5.1 ) | 4.5 ( 0.6 ~ 5.4 ) | 5.4 ( 0.6 ~ 6.3 ) | 6.7 ( 0.6 ~ 6.7 ) |
| Power consumption | | Cooling/Heating | kW | 0.6 / 0.84 | 1.07 / 1.16 | 1.04 / 1.10 | 1.56 / 1.45 | 1.99 / 2.07 |
| EER/COP | | Cooling/Heating | | 4.25 / 4.11 | 3.36 / 3.66 | 3.85 / 4.09 | 3.21 / 3.72 | 2.81 / 3.24 |
| Max. running current | | | A | 8 | 8 | 12 | 15 | 15 |
| Sound power level | Indoor | Cooling/Heating | dB(A) | 56 / 56 | 58 / 58 | 60 / 60 | 60 / 60 | 60 / 60 |
| | Outdoor | Cooling/Heating | | 56 / 56 | 58 / 58 | 63 / 63 | 63 / 63 | 65 / 65 |
| Sound pressure level | Indoor | Cooling (P-Hi/Hi/Me/Lo) | | 38 / 36 / 32 / 29 | 41 / 40 / 36 / 30 | 47 / 42 / 36 / 30 | 47 / 42 / 36 / 30 | 47 / 46 / 39 / 30 |
| | | Heating (P-Hi/Hi/Me/Lo) | | 39 / 38 / 33 / 29.5 | 43 / 42 / 35 / 32 | 47 / 42 / 36 / 32 | 47 / 42 / 36 / 32 | 47 / 46 / 39 / 32 |
| | Outdoor | Cooling/Heating | | 47 / 47 | 50 / 50 | 49 / 49 | 50 / 49 | 52 / 52 |
| Air flow | Indoor | Cooling (P-Hi/Hi/Me/Lo) | $m^3$/min | 10 / 9 / 8 / 6.5 | 11 / 9.5 / 9 / 7 | 13.5 / 11.5 / 9 / 7 | 13.5 / 11.5 / 9 / 7 | 13.5 / 13.5 / 10 / 7 |
| | | Heating (P-Hi/Hi/Me/Lo) | | 10.5 / 9.5 / 8.5 / 7 | 11.5 / 10 / 9 / 8 | 13.5 / 11.5 / 9 / 8 | 13.5 / 11.5 / 9 / 8 | 13.5 / 13.5 / 10 / 8 |
| | Outdoor | Cooling/Heating | | 29.5 / 27.0 | 32.5 / 29.5 | 36 / 33 | 40 / 33 | 41.5 / 39 |
| Exterior dimensions | Indoor | HeightxWidthxDepth | mm | Unit : 248 x 570 x 570 Panel : 35 x 700 x 700 | | | | |
| | Outdoor | | | 595 x 780(+62) x 290 | | 640 x 800(+71) x 290 | | |
| Net weight | Indoor / Outdoor | | kg | 18.5 (Unit : 15 Panel : 3.5 ) / 35.0 | | 18.5 (Unit : 15 Panel : 3.5 ) / 45.0 | | |
| Refrigerant | | Type/GWP | | R410A / 2088 | | | | |
| | | Charge | kg/$TCO_2Eq$ | 1.2 / 2.506 | | 1.5 / 3.132 | | |
| Refrigerant piping size | | Liquid/Gas | ø mm | 6.35(1/4") / 9.52(3/8") | | 6.35(1/4") / 12.7(1/2") | | |
| Refrigerant line (one way) length [chargeless length] | | | m | Max. 15 [Not required] | | Max. 30 [15] | | |
| Vertical height differences | | Outdoor is higher/lower | m | Max. 10 / Max.10 | | Max. 20 / Max.20 | | |
| Outdoor operating temperature range | | Cooling | ˚CDB | -15~46 | | | | |
| | | Heating | | -15~24 | | -20~24 | | |
| Panel | | | | TC-PSA-25W-E | | | | |

- The data are measured under the following conditions(ISO-T1, H1). Cooling: Indoor temp. of 27˚CDB, 19˚CWB, and outdoor temp. of 35˚CDB. Heating: Indoor temp. of 20˚CDB, and outdoor temp. of 7˚CDB, 6˚CWB.
- Sound level indicates the value in an anechoic chamber. During operation these values are somewhat higher due to ambient conditions.
- 'tonne(s) of $CO_2$ equivalent' means a quantity of greenhouse gases- expressed as the product of the weight of the greenhouse gases in metric tonnes and of their global warming potential.

# MULTI-SPLIT SCM

The Multi DC Inverter range is an innovative Multi-split systems from Mitsubishi Heavy Industries Thermal Systems which offers the perfect answer for air conditioning comfort in several environments. An outdoor unit can air condition up to 6 different rooms. Utilising a range of compact and elegant indoor units that are available in 6 different types make air conditioning in any indoor environment possible. The whole range is characterised by high flexibility, high energy efficiency and extremely low noise levels.

**FDTC**
4way Ceiling Cassette type

**FDE**
Ceiling Suspended type

**SRK/SKM**
Wall Mounted type

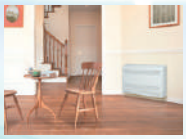

**SRF**
Floor Standing type

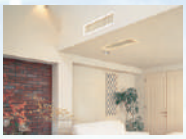

**SRR**
Ceiling Concealed type

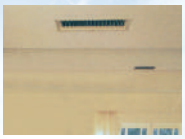

**FDUM**
Duct Connected type

## A wide variety of choices for indoor units

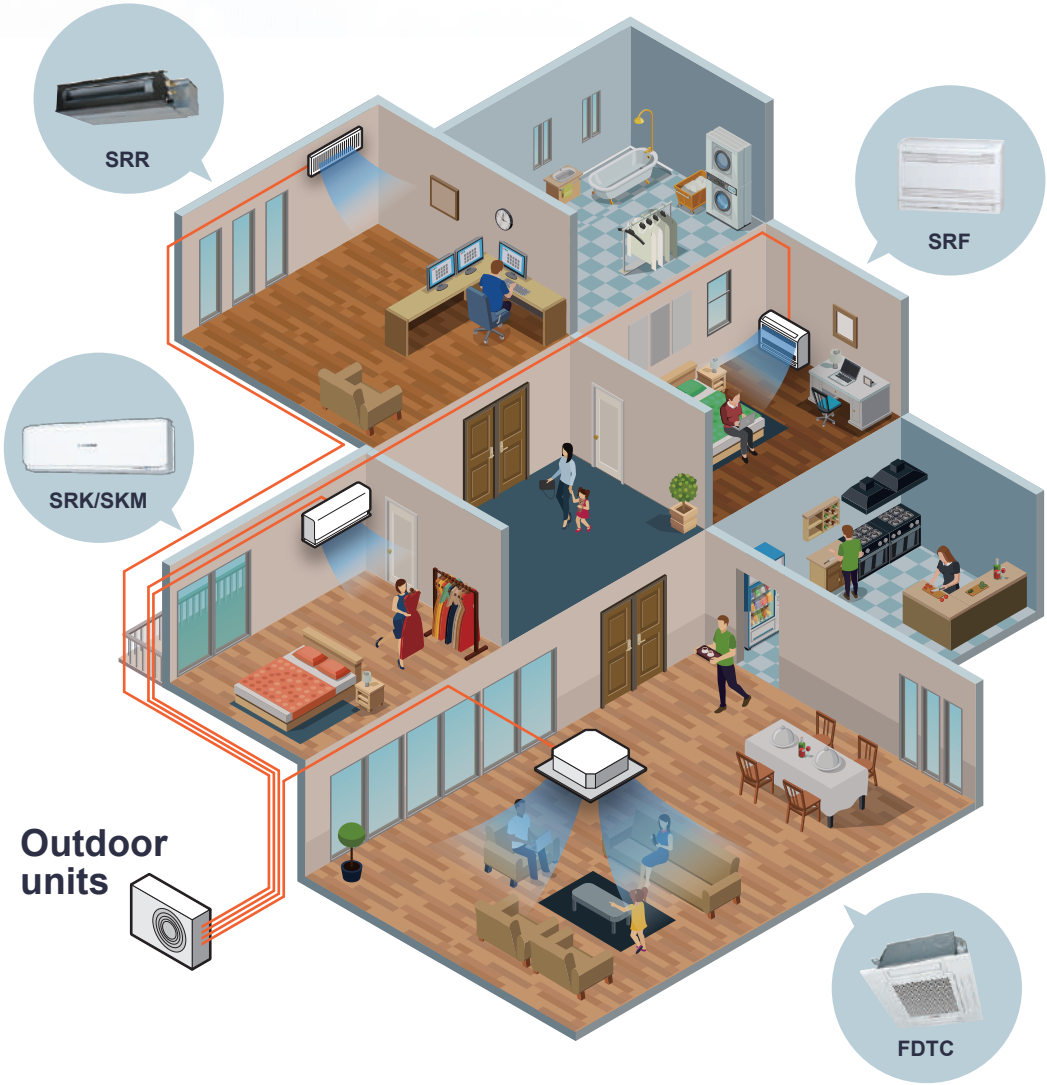

# MULTI-SPLIT SYSTEM

## High energy efficiency by new refrigerant R32

Line up of multi split systems use R32 refrigerant. R32 is the next generation refrigerant that boasts nearly 70% lower Global Warming Potential Rate than R410A. Due to its superior qualities R32 offers amazing energy efficiency benefits.

**New!**

SCM40ZS-W
SCM45ZS-W

SCM50ZS-W
SCM60ZS-W

SCM71ZS-W
SCM80ZS-W

SCM100ZS-W

### Improved SEER and SCOP

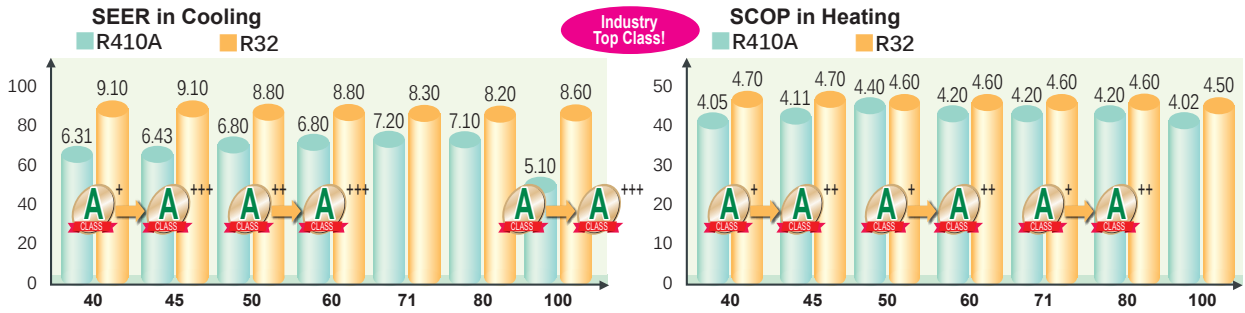


* The above values are based on indoor units combination with SRK-ZSX-W only.
Only SCM100ZS-W is calculated in the combination with SRK-ZS-W.

## Comfort

By the application of the Twin Rotary compressor, the outdoor units have low noise levels. Silent operation is installed in all outdoor units.

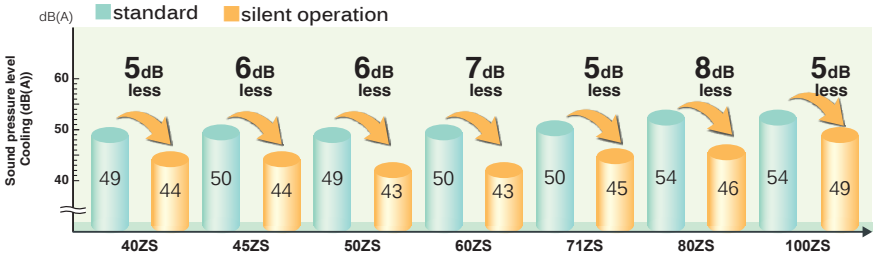


## Wide Range of Operation

Expand the cooling range of all model to 46˚C.

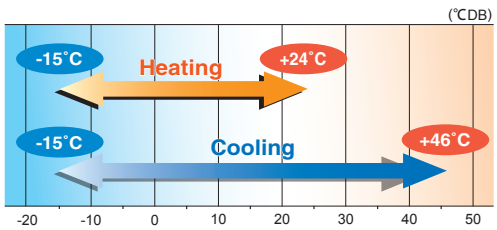


## Reduction of weight

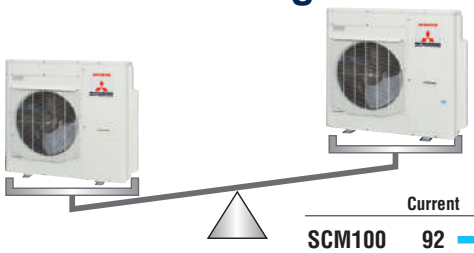

| | Current | | New | |
|---|---|---|---|---|
| SCM100 | 92 | → | 73 | 19kg less!! |

## Installation Flexibility

You are given greater freedom to decide where the indoor units will be installed to optimise interior space and convenience.

| | | SCM40/ 45ZS-W | SCM50/ 60ZS-W | SCM71/ 80ZS-W | SCM100ZS-W |
|---|---|---|---|---|---|
| length for one indoor unit | | under 25m | under 25m | under 25m | under 25m |
| total length for all rooms | | under 30m | under 40m | under 70m | under 75m |
| height difference | lower installation spot of the indoor unit | under 15m | under 15m | under 20m | under 20m |
| | upper installation spot of the indoor unit | under 15m | under 15m | under 20m | under 20m |
| | maximum height difference of the indoor units | under 25m | under 25m | under 25m | under 25m |
| length of chargeless refrigerant pipe | | 20m | 40m | 30m | 40m |

## ■SPECIFICATIONS

| Item | | Model | For two rooms | | For three rooms | |
|---|---|---|---|---|---|---|
| | | | SCM40ZS-W | SCM45ZS-W | SCM50ZS-W | SCM60ZS-W |
| Power Source | | | 1Phase, 220 - 240V, 50Hz | | | |
| Nominal cooling capacity (Min~Max) | | kW | 4.0(1.5~5.9) | 4.5(1.5~6.4) | 5.0(1.7~7.1) | 6.0(1.7~7.5) |
| Nominal heating capacity (Min~Max) | | kW | 4.5(1.0~6.3) | 5.3(1.0~6.5) | 6.0(1.0~7.5) | 6.8(1.0~7.8) |
| Power Consumption | Cooling | kW | 0.80(0.34~2.10) | 0.96(0.34~2.30) | 1.02(0.43~2.15) | 1.32(0.43~2.28) |
| | Heating | kW | 0.83(0.25~1.48) | 1.06(0.25~1.48) | 1.16(0.32~2.50) | 1.40(0.32~2.80) |
| EER | Cooling | | 5.00 | 4.69 | 4.90 | 4.55 |
| COP | Heating | | 5.42 | 5.00 | 5.17 | 4.86 |
| Max. running current | | A | 14 | 14 | 15 | 15 |
| Sound power level | Cooling | dB(A) | 62 | 63 | 62 | 62 |
| | Heating | dB(A) | 64 | 65 | 64 | 64 |
| Sound pressure level | Cooling | dB(A) | 49 | 50 | 49 | 50 |
| | Heating | dB(A) | 51 | 52 | 52 | 52 |
| Air flow | Cooling | $m^3$/min | 32.5 | 32.5 | 41.0 | 41.0 |
| | Heating | | 32.5 | 32.5 | 41.0 | 41.0 |
| Exterior dimensions (H×W×D) | | mm | 595×780(+90)×290 | | 640×850(+65)×290 | |
| Net weight | | kg | 40.0 | | 48.5 | |
| Refrigerant | Type/GWP | | R32/675 | | | |
| | Charge | kg/$TCO_2Eq$ | 1.4/0.945 | | 1.8/1.215 | |
| Refrigerant piping size | Liquid | Φmm | 6.35(1/4")×2 | | 6.35(1/4")×3 | |
| | Gas | | 9.52(3/8")×2 | | 9.52(3/8")×3 | |
| Outdoor operating temperature range | Cooling | ˚CDB | -15~46 | | | |
| | Heating | | -15~24 | | | |
| Number of Connectable indoor units | | | 2 | 2 | Min.2~Max.3 | Min.2~Max.3 |
| Total indoor units capacity | | kW | 4.0～6.0 | 4.5～7.0 | 5.0～8.5 | 6.0～11.0 |

| Item | | Model | For four rooms | | For five rooms |
|---|---|---|---|---|---|
| | | | SCM71ZS-W | SCM80ZS-W | SCM100ZS-W |
| Power Source | | | 1Phase, 220 - 240V, 50Hz | | |
| Nominal cooling capacity (Min~Max) | | kW | 7.1(1.8~8.8) | 8.0(1.8~9.2) | 10.0(1.7~11.5) |
| Nominal heating capacity (Min~Max) | | kW | 8.6(1.1~9.4) | 9.3(1.1~9.8) | 10.5(0.9~11.5) |
| Power Consumption | Cooling | kW | 1.42(0.48~2.75) | 1.70(0.48~2.83) | 2.70(0.48~3.65) |
| | Heating | kW | 1.75(0.35~3.00) | 1.95(0.35~3.12) | 2.38(0.37~2.90) |
| EER | Cooling | | 5.00 | 4.71 | 3.70 |
| COP | Heating | | 4.91 | 4.77 | 4.41 |
| Max. running current | | A | 20 | 20 | 21 |
| Sound power level | Cooling | dB(A) | 63 | 66 | 67 |
| | Heating | dB(A) | 67 | 67 | 72 |
| Sound pressure level | Cooling | dB(A) | 50 | 54 | 54 |
| | Heating | dB(A) | 54 | 54 | 59 |
| Air flow | Cooling | $m^3$/min | 50.0 | 56.0 | 75.0 |
| | Heating | | 56.0 | 56.0 | 75.0 |
| Exterior dimensions (H×W×D) | | mm | 750×880(+73)×340 | | 945×970×370 |
| Net weight | | kg | 61.0 | | 73.0 |
| Refrigerant | Type/GWP | | R32/675 | | |
| | Charge | kg/$TCO_2Eq$ | 2.55/1.721 | | 2.98/2.012 |
| Refrigerant piping size | Liquid | Φmm | 6.35(1/4")×4 | | 6.35(1/4")×5 |
| | Gas | | 9.52(3/8")×4 | | 9.52(3/8")×5 |
| Outdoor operating temperature range | Cooling | ˚CDB | -15~46 | | |
| | Heating | | -15~24 | | |
| Number of Connectable indoor units | | | Min.2~Max.4 | Min.2~Max.4 | Min.2*~Max.5* |
| Total indoor units capacity | | kW | 7.0～12.5 | 8.0～13.5 | 9.0～16.0* |

- The data are measured under the following conditions(ISO-T1, H1). Cooling: Indoor temp. of 27˚CDB, 19˚CWB, and outdoor temp. of 35˚CDB. Heating: Indoor temp. of 20˚CDB, and outdoor temp. of 7˚CDB, 6˚CWB.
- Sound level Indicates the value in an anechoic chamber. During operation these values are somewhat higher due to ambient conditions.
- 'tonne(s) of $CO_2$ equivalent' means a quantity of greenhouse gases- expressed as the product of the weight of the greenhouse gases in metric tonnes and of their global warming potential.

＊ Only the following combinations are possible. The total connecting capacity of indoor units should be between 90 ~ 160.

【2 indoor units can be connectable】
- Includes 1 or more SRK-ZR
- SRK-ZSX x 2
- SRK-ZSX + FDE50
- SRK-ZSX + SRF35,50
- FDE50 + SRF50

【3 or 4 indoor unit can be connectable】
- No limitation

【5 indoor unit can be connectable】

Only the following A and B combinations are possible.

A. The total number of (SRK-ZSX, SRF 35,50, FDE 50) is 4 or less.
5 units can be connected by connecting other indoor units.
Example: ZSX x 4 + ZS x 1 are possible.

B. When connecting 146 - 160 , the following combinations are not applicable.
Indoor unit combination: Total 151(20+20+20+20+71),Total 160(20+20+20+20+80),
Total 156 (20+20+20+25+71), Total 160 (20+20+20+50+50).

# MULTI-SPLIT SYSTEM

## ■INDOOR UNITS SPECIFICATION FOR MULTI COMBINATIONS

Wall Mounted

# SRK-ZSX

| Item | | Model | SRK20ZSX-W,-WB,-WT | SRK25ZSX-W,-WB,-WT | SRK35ZSX-W,-WB,-WT | SRK50ZSX-W,-WB,-WT | SRK60ZSX-W,-WB,-WT |
|---|---|---|---|---|---|---|---|
| Nominal cooling capacity | | kW | 2.0 | 2.5 | 3.5 | 5.0 | 6.0 |
| Nominal heating capacity | | kW | 3.0 | 3.4 | 4.5 | 5.8 | 6.8 |
| Sound power level | Cooling | dB(A) | 53 | 55 | 58 | 59 | 62 |
| | Heating | dB(A) | 55 | 56 | 58 | 62 | 63 |
| Sound pressure level | Cooling(Hi/Me/Lo/Ulo) | dB(A) | 38 / 31 / 24 / 19 | 39 / 33 / 25 / 19 | 43 / 35 / 26 / 19 | 44 / 39 / 31 / 22 | 48 / 41 / 33 / 22 |
| | Heating(Hi/Me/Lo/Ulo) | dB(A) | 38 / 33 / 25 / 19 | 40 / 34 / 27 / 19 | 42 / 35 / 28 / 19 | 47 / 41 / 33 / 23 | 47 / 42 / 34 / 23 |
| Air flow | Cooling(Hi/Me/Lo/Ulo) | $m^3$/min | 11.3 / 9.1 / 6.0 / 5.0 | 12.2 / 10.0 / 6.7 / 5.0 | 13.1 / 10.8 / 7.3 / 5.0 | 14.3 / 12.4 / 7.8 / 5.4 | 16.3 / 13.4 / 8.9 / 5.4 |
| | Heating(Hi/Me/Lo/Ulo) | | 12.2 / 10.3 / 7.2 / 5.4 | 12.8 / 11.0 / 7.8 / 5.4 | 13.9 / 11.8 / 8.6 / 5.4 | 17.3 / 14.3 / 9.8 / 6.2 | 17.8 / 13.7 / 10.9 / 6.2 |
| Exterior dimensions (H×W×D) | | mm | 305×920×220 | | | | |
| Net weight | | kg | 13.0 | | | | |
| Refrigerant piping size | Liquid / Gas | Φmm | 6.35(1/4") / 9.52(3/8") | | | 6.35(1/4") / 12.7(1/2") | |
| Clean filter | | | Allergen Clear Filter ×1, Photocatalytic Washable Deodorising Filter×1 | | | | |

Wall Mounted

# SRK-ZR

| Item | | Model | SRK71ZR-W | SRK80ZR-W |
|---|---|---|---|---|
| Nominal cooling capacity | | kW | 7.1 | 8.0 |
| Nominal heating capacity | | kW | 8.0 | 9.0 |
| Sound power level | Cooling | dB(A) | 57 | 60 |
| | Heating | dB(A) | 60 | 62 |
| Sound pressure level | Cooling(Hi/Me/Lo/Ulo) | dB(A) | 44 / 41 / 37 / 25 | 47 / 44 / 39 / 26 |
| | Heating(Hi/Me/Lo/Ulo) | dB(A) | 46 / 39 / 35 / 28 | 47 / 41 / 36 / 29 |
| Air flow | Cooling(Hi/Me/Lo/Ulo) | $m^3$/min | 20.5 / 18.6 / 16.2 / 10.4 | 23.5 / 20.2 / 17.5 / 10.4 |
| | Heating(Hi/Me/Lo/Ulo) | | 25.0 / 19.8 / 17.3 / 13.3 | 26.5 / 21.3 / 18.4 / 13.5 |
| Exterior dimensions (H×W×D) | | mm | 339×1197×262 | |
| Net weight | | kg | 15.5 | 16.5 |
| Refrigerant piping size | Liquid / Gas | Φmm | 6.35 (1/4") / 15.88 (5/8") | |
| Clean filter | | | Allergen Clear Filter ×1, Photocatalytic Washable Deodorising Filter×1 | |

Wall Mounted

# SRK-ZS

| Item | | Model | SRK20ZS-W,-WB,-WT | SRK25ZS-W,-WB,-WT | SRK35ZS-W,-WB,-WT | SRK50ZS-W,-WB,-WT |
|---|---|---|---|---|---|---|
| Nominal cooling capacity | | kW | 2.0 | 2.5 | 3.5 | 5.0 |
| Nominal heating capacity | | kW | 3.0 | 3.4 | 4.5 | 5.8 |
| Sound power level | Cooling | dB(A) | 48 | 50 | 54 | 59 |
| | Heating | dB(A) | 50 | 53 | 56 | 60 |
| Sound pressure level | Cooling(Hi/Me/Lo/Ulo) | dB(A) | 34 / 25 / 22 / 19 | 36 / 28 / 23 / 19 | 40 / 30 / 26 / 19 | 46 / 36 / 29 / 22 |
| | Heating(Hi/Me/Lo/Ulo) | dB(A) | 36 / 29 / 23 / 19 | 39 / 30 / 24 / 19 | 41 / 36 / 25 / 19 | 46 / 37 / 31 / 24 |
| Air flow | Cooling(Hi/Me/Lo/Ulo) | $m^3$/min | 9.3 / 7.0 / 5.9 / 5.0 | 9.9 / 8.0 / 5.9 / 5.0 | 11.3 / 8.7 / 7.0 / 5.0 | 12.1 / 9.9 / 7.4 / 5.9 |
| | Heating(Hi/Me/Lo/Ulo) | | 10.0 / 8.5 / 6.5 / 5.9 | 11.3 / 8.7 / 6.7 / 5.9 | 12.3 / 11.0 / 7.0 / 5.6 | 13.9 / 11.2 / 9.1 / 7.4 |
| Exterior dimensions (H×W×D) | | mm | 290×870×230 | | | |
| Net weight | | kg | 9.5 | | | 10.0 |
| Refrigerant piping size | Liquid / Gas | Φmm | 6.35(1/4") / 9.52(3/8") | | | 6.35(1/4") / 12.7(1/2") |
| Clean filter | | | Allergen Clear Filter × 1, Photocatalytic Washable Deodorising Filter × 1 | | | |

Wall Mounted

# SKM-ZSP

- **Elegant Timeless Design**
- **Compact and Light weight**

| Item | | Model | SKM20ZSP-W | SKM25ZSP-W | SKM35ZSP-W |
|---|---|---|---|---|---|
| Nominal cooling capacity | | kW | 2.0 | 2.5 | 3.5 |
| Nominal heating capacity | | kW | 3.0 | 3.4 | 4.5 |
| Sound power level | Cooling | dB(A) | 57 | 57 | 58 |
| | Heating | dB(A) | 56 | 56 | 58 |
| Sound pressure level | Cooling(Hi/Me/Lo) | dB(A) | 42 / 35 / 22 | 43 / 36 / 23 | 44 / 37 / 25 |
| | Heating(Hi/Me/Lo) | dB(A) | 41 / 36 / 26 | 41 / 36 / 27 | 42 / 37 / 30 |
| Air flow | Cooling(Hi/Me/Lo) | $m^3$/min | 8.5 / 7.0 / 5.0 | 8.5 / 7.0 / 5.0 | 9.0 / 7.5 / 5.0 |
| | Heating(Hi/Me/Lo) | | 8.0 / 7.0 / 5.5 | 8.0 / 7.0 / 5.5 | 8.5 / 7.0 / 6.0 |
| Exterior dimensions (H×W×D) | | mm | 267×783×210 | | |
| Net weight | | kg | 7.5 | | |
| Refrigerant piping size | Liquid / Gas | Φmm | 6.35(1/4")/9.52(3/8") | | |
| Clean filter | | | — | | |

NOTES
- The data are measured under the following conditions(ISO-T1, H1). Cooling: Indoor temp. of 27°CDB, 19°CWB, and outdoor temp. of 35°CDB. Heating: Indoor temp. of 20°CDB, and outdoor temp. of 7°CDB, 6°CWB.
- Sound level the value in an anechoic chamber.During operation these values are somewhat higher due to ambient conditions.

Floor Standing

# SRF-ZS/ZSX

| Item | | Model | SRF25ZS-W | SRF35ZS-W | SRF50ZSX-W |
|---|---|---|---|---|---|
| Nominal cooling capacity | | kW | 2.5 | 3.5 | 5.0 |
| Nominal heating capacity | | kW | 3.4 | 4.5 | 5.8 |
| Sound power level | Cooling | dB(A) | 50 | 51 | 58 |
| | Heating | dB(A) | 51 | 52 | 58 |
| Sound pressure level | Cooling(Hi/Me/Lo/Ulo) | dB(A) | 38 / 32 / 29 / 25 | 40 / 35 / 33 / 29 | 46 / 38 / 33 / 28 |
| | Heating(Hi/Me/Lo/Ulo) | dB(A) | 39 / 35 / 33 / 29 | 41 / 36 / 35 / 33 | 46 / 41 / 38 / 32 |
| Air flow | Cooling(Hi/Me/Lo/Ulo) | $m^3$/min | 9.0 / 7.6 / 6.7 / 5.8 | 9.2 / 7.8 / 7.3 / 6.4 | 11.5 / 9.6 / 7.4 / 6.6 |
| | Heating(Hi/Me/Lo/Ulo) | $m^3$/min | 10.5 / 8.2 / 7.7 / 6.6 | 10.7 / 8.3 / 8.1 / 7.4 | 12.0 / 10.0 / 9.4 / 7.6 |
| Exterior dimensions(H×W×D) | | mm | 600×860×238 | | |
| Net weight | | kg | 18.0 | 19.0 | |
| Refrigerant piping size | Liquid / Gas | Φmm | 6.35(1/4") / 9.52(3/8") | | 6.35(1/4") / 12.7(1/2") |
| Clean filter | | | Allergen Clear Filter × 1 Photocatalytic Washable Deodorising Filter×1 | | |

Ceiling Concealed

# SRR-ZS

| Item | | Model | SRR25ZS-W | SRR35ZS-W | SRR50ZS-W | SRR60ZS-W |
|---|---|---|---|---|---|---|
| Nominal cooling capacity | | kW | 2.5 | 3.5 | 5.0 | 6.0 |
| Nominal heating capacity | | kW | 3.4 | 4.5 | 5.8 | 6.8 |
| Sound power level | Cooling | dB(A) | 56 | 57 | 59 | 60 |
| | Heating | dB(A) | 59 | 60 | 61 | 63 |
| Sound pressure level | Cooling(Hi/Me/Lo/Ulo) | dB(A) | 37 / 33 / 30 / 24 | 38 / 34 / 31 / 25 | 41 / 37 / 34 / 29 | 44 / 38 / 35 / 30 |
| | Heating(Hi/Me/Lo/Ulo) | dB(A) | 40 / 37 / 34 / 28 | 42 / 38 / 35 / 29 | 43 / 39 / 37 / 32 | 45 / 41 / 38 / 33 |
| Air flow | Cooling(Hi/Me/Lo/Ulo) | $m^3$/min | 9.5 / 8.0 / 6.5 / 4.5 | 10.0 / 8.5 / 7.0 / 5.0 | 13.5 / 11.0 / 10.0 / 7.5 | 14.5 / 11.5 / 10.5 / 8.0 |
| | Heating(Hi/Me/Lo/Ulo) | $m^3$/min | 10.0 / 9.0 / 8.0 / 6.0 | 10.5 / 9.5 / 8.5 / 6.5 | 14.0 / 12.5 / 11.0 / 8.5 | 15.0 / 13.0 / 11.5 / 9.0 |
| Available external static pressure | | Pa | 35(Initial static pressure with air filter : 5Pa) | | 50(Initial static pressure with air filter : 5Pa) | |
| Exterior dimensions(H×W×D) | | mm | 200×750×500 | | 200×950×500 | |
| Net weight | | kg | 20.5 | | 24.0 | |
| Refrigerant piping size | Liquid / Gas | Φmm | 6.35(1/4") / 9.52(3/8") | | 6.35(1/4") / 12.7(1/2") | |
| Bottom air inlet kit (option) | | | UT-BAT1EF | | UT-BAT2EF | |

4way Ceiling Cassette

# FDTC-VH

**•Draft prevention panel (Option)**
**•Motion sensor (Option)**
**•More quiet noise & Improve the aerodynamic performance**

| Item | | Model | FDTC25VH1 | FDTC35VH1 | FDTC50VH | FDTC60VH |
|---|---|---|---|---|---|---|
| Nominal cooling capacity | | kW | 2.5 | 3.5 | 5.0 | 6.0 |
| Nominal heating capacity | | kW | 3.4 | 4.5 | 5.8 | 6.8 |
| Sound power level | Cooling | dB(A) | 51 | 52 | 59 | 60 |
| | Heating | dB(A) | 52 | 53 | 59 | 60 |
| Sound pressure level | Cooling(P-Hi/Hi/Me/Lo) | dB(A) | 38 / 34 / 30 / 27 | 39 / 36 / 32 / 29 | 44 / 40 / 35 / 27 | 46 / 42 / 38 / 31 |
| | Heating(P-Hi/Hi/Me/Lo) | dB(A) | 39 / 36 / 32 / 28 | 41 / 38 / 34 / 30 | 44 / 40 / 35 / 27 | 46 / 42 / 38 / 31 |
| Air flow | Cooling(P-Hi/Hi/Me/Lo) | $m^3$/min | 8.5 / 7.5 / 7.0 / 6.0 | 9.0 / 8.0 / 7.5 / 6.5 | 13.0 / 11.0 / 9.0 / 7.0 | 14.0 / 12.0 / 10.0 / 8.0 |
| | Heating(P-Hi/Hi/Me/Lo) | $m^3$/min | 9.5 / 8.5 / 7.5 / 6.5 | 10.0 / 9.0 / 8.0 / 7.0 | 13.0 / 11.0 / 9.0 / 7.0 | 14.0 / 12.0 / 10.0 / 8.0 |
| Exterior dimensions(H×W×D) | | mm | Unit : 248×570×570 Panel : 10×620×620 | | | |
| Net weight | | kg | 16.5 (Unit.14 Panel:2.5) | | | |
| Refrigerant piping size | Liquid / Gas | Φmm | 6.35(1/4") / 9.52(3/8") | | 6.35(1/4") / 12.7(1/2") | |
| Panel | | | Standard Panel : TC-PSA-5AW-E(Honeycomb), TC-PSAG-5AW-E(Grid)<br>Draft Prevention Panel : TC-PSAE-5AW-E(Honeycomb), TC-PSAGE-5AW-E(Grid) | | | |

Duct Connected-Low/Middle Static Pressure / Ceiling Suspended

# FDUM-VH / FDE-VH

**•Motion sensor (Option)**

**•Motion sensor (Option)**

| Item | | Model | FDUM50VH | FDE50VH |
|---|---|---|---|---|
| Nominal cooling capacity | | kW | 5.0 | 5.0 |
| Nominal heating capacity | | kW | 5.8 | 5.8 |
| Sound power level | Cooling | dB(A) | 60 | 60 |
| | Heating | dB(A) | 60 | 60 |
| Sound pressure level | Cooling(P-Hi/Hi/Me/Lo) | dB(A) | 37 / 32 / 29 / 26 | 46 / 38/ 36/ 31 |
| | Heating(P-Hi/Hi/Me/Lo) | dB(A) | 37 / 32 / 29 / 26 | 46 / 38/ 36/ 31 |
| Air flow | Cooling(P-Hi/Hi/Me/Lo) | $m^3$/min | 13.0 / 10.0 / 9.0 / 8.0 | 13.0 / 10.0 / 9.0 / 7.0 |
| | Heating(P-Hi/Hi/Me/Lo) | $m^3$/min | 13.0 / 10.0 / 9.0 / 8.0 | 13.0 / 10.0 / 9.0 / 7.0 |
| Available external static pressure | | Pa | Standard : 35 Max : 100 | — |
| Exterior dimensions (H×W×D) | | mm | 280×750×635 | 210×1070×690 |
| Net weight | | kg | 29.0 | 28.0 |
| Refrigerant piping size | Liquid / Gas | Φmm | 6.35(1/4") / 12.7(1/2") | 6.35(1/4") / 12.7(1/2") |
| Air filter | | | Filter KIT : UM-FL1EF (option) | Pocket Plastic net (Washable) × 2 |

R410A

# MULTI-SPLIT SYSTEM

## Outdoor Units

Powerful, efficient and silent outdoor units are available in 8 sizes and able to combine up to 6 indoor units.

SCM40ZS-S
SCM45ZS-S

SCM71ZM-S1
SCM80ZM-S1

SCM50ZS-S1
SCM60ZM-S1

SCM100ZM-S
SCM125ZM-S

## Energy saving

All models can achieve very high seasonal efficiency thanks to the application of inverter technology which makes it possible to vary the power output according to demand for cooling or heating. This makes it possible to reach the set temperature quickly and to keep it stable over time saving about 30% in consumption compared to traditional fixed speed air conditioners.

**SEER in Cooling**

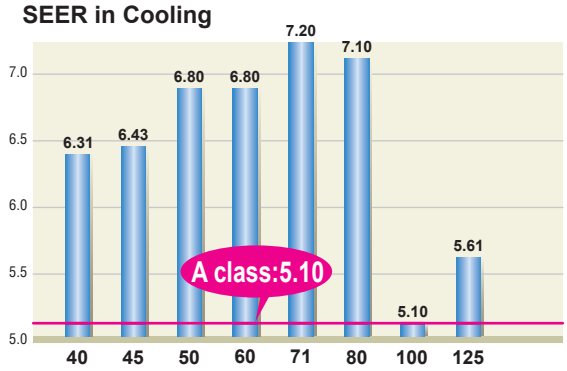


**SCOP in Heating**

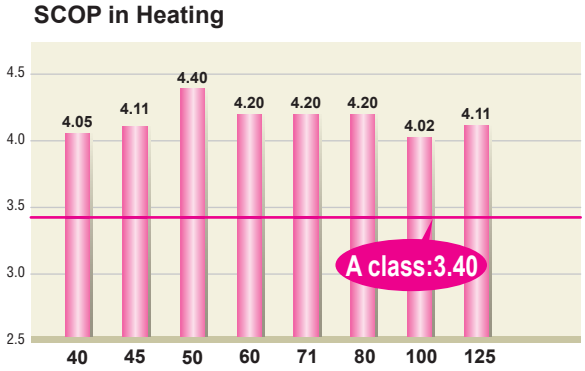


・The above values are based on indoor unit combination with SRK-ZSX only.

## Comfort

By the application of the Twin Rotary compressor, the outdoor units have low noise levels.
All the units also operate in heating and cooling mode with an outdoor temperature limit of -15°C.
Silent operation is newly installed in SCM50, 60, 71, 80 type.

## Installation Flexibility

With a generous maximum piping length of 90m*, you are given greater freedom to decide where the indoor units will be installed to optimise interior space and convenience.

| | | SCM40/ 45ZS-S | SCM50ZS-S1/ SCM60ZM-S1 | SCM71/ 80ZM-S1 | SCM100/ 125ZM-S |
|---|---|---|---|---|---|
| length for one indoor unit | | under 25m | under 25m | under 25m | under 25m |
| total length for all rooms | | under 30m | under 40m | under 70m | under 90m* |
| height difference | lower installation spot of the indoor unit (A) | under 15m | under 15m | under 20m | under 20m |
| | upper installation spot of the indoor unit (B) | under 15m | under 15m | under 20m | under 20m |
| | maximum height difference of the indoor units (C) | under 25m | under 25m | under 25m | under 25m |
| length of charegeless refrigerant pipe | | 30m | 40m | 40m | 50m |

SCM125ZM-S

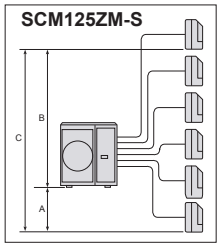

## ■SPECIFICATIONS

| Item | | Model | For two rooms | | For three rooms | |
|---|---|---|---|---|---|---|
| | | | SCM40ZS-S | SCM45ZS-S | SCM50ZS-S1 | SCM60ZM-S1 |
| Power Source | | | 1Phase, 220 - 240V, 50Hz | | | |
| Nominal cooling capacity (Min~Max) | | kW | 4.0(1.5~5.9) | 4.5(1.5~6.4) | 5.0(1.8~7.1) | 6.0(1.8~7.5) |
| Nominal heating capacity (Min~Max) | | kW | 4.5(1.3~6.3) | 5.3(1.3~6.5) | 6.0(1.4~7.5) | 6.8(1.5~7.8) |
| Power Consumption | Cooling | kW | 0.84(0.59~2.13) | 1.04(0.59~2.30) | 1.05(0.60~2.15) | 1.43(0.50~2.39) |
| | Heating | kW | 0.90(0.54~1.70) | 1.15(0.54~1.92) | 1.21(0.55~2.58) | 1.45(0.60~3.00) |
| EER | Cooling | | 4.76 | 4.33 | 4.76 | 4.20 |
| COP | Heating | | 5.00 | 4.61 | 4.96 | 4.69 |
| Max. running current | | A | 14 | 14 | 14 | 17 |
| Sound power level | Cooling | dB(A) | 62 | 62 | 61 | 63 |
| | Heating | dB(A) | 64 | 64 | 63 | 65 |
| Sound pressure level | Cooling | dB(A) | 48 | 49 | 48 | 50 |
| | Heating | dB(A) | 50 | 51 | 50 | 52 |
| Air flow | Cooling | $m^3$/min | 32.5 | 32.5 | 41.0 | 42.0 |
| | Heating | | 32.5 | 32.5 | 41.0 | 42.0 |
| Exterior dimensions (H×W×D) | | mm | 595×780(+90)×290 | | 640×850(+65)×290 | |
| Net weight | | kg | 42.0 | | 49.0 | 49.5 |
| Refrigerant | Type/GWP | | R410A/2088 | | | |
| | Charge | kg/$TCO_2Eq$ | 1.9/3.967 | | 2.5/5.22 | |
| Refrigerant piping size | Liquid | Φmm | 6.35(1/4")×2 | | 6.35(1/4")×3 | |
| | Gas | | 9.52(3/8")×2 | | 9.52(3/8")×3 | |
| Outdoor operating temperature range | Cooling | ˚CDB | -15~43 | | | |
| | Heating | | -15~24 | | | |
| Number of Connectable indoor units | | | 2 | 2 | Min.2~Max.3 | Min.2~Max.3 |
| Total indoor units capacity | | kW | 6.0 | 7.0 | 8.5 | 11.0 |

| Item | | Model | For four rooms | | For five/six rooms | |
|---|---|---|---|---|---|---|
| | | | SCM71ZM-S1 | SCM80ZM-S1 | SCM100ZM-S | SCM125ZM-S |
| Power Source | | | 1Phase, 220 - 240V, 50Hz | | | |
| Nominal cooling capacity (Min~Max) | | kW | 7.1(1.8~8.8) | 8.0(1.8~9.2) | 10.0(1.8~12.0) | 12.5(1.8~14.0) |
| Nominal heating capacity (Min~Max) | | kW | 8.6(1.5~9.4) | 9.3(1.5~9.8) | 12.0(1.5~13.5) | 13.5(1.5~14.0) |
| Power Consumption | Cooling | kW | 1.58(0.48~2.75) | 1.95(0.48~2.83) | 2.86(0.65~4.03) | 3.90(0.65~4.80) |
| | Heating | kW | 2.00(0.60~3.35) | 2.26(0.60~3.43) | 2.93(0.70~3.40) | 3.25(0.70~3.42) |
| EER | Cooling | | 4.49 | 4.10 | 3.50 | 3.21 |
| COP | Heating | | 4.30 | 4.12 | 4.10 | 4.15 |
| Max. running current | | A | 20 | 20 | 29 | 29 |
| Sound power level | Cooling | dB(A) | 63 | 66 | 68 | 69 |
| | Heating | dB(A) | 66 | 66 | 71 | 72 |
| Sound pressure level | Cooling | dB(A) | 50 | 54 | 56 | 57 |
| | Heating | dB(A) | 54 | 54 | 59 | 60 |
| Air flow | Cooling | $m^3$/min | 50.0 | 56.0 | 75.0 | 75.0 |
| | Heating | | 56.0 | 56.0 | 75.0 | 82.0 |
| Exterior dimensions (H×W×D) | | mm | 750×880(+73)×340 | | 945×970(+73)×370 | |
| Net weight | | kg | 62.0 | | 92.0 | |
| Refrigerant | Type/GWP | | R410A/2088 | | | |
| | Charge | kg/$TCO_2Eq$ | 3.15/6.577 | | 6.0/12.528 | |
| Refrigerant piping size | Liquid | Φmm | 6.35(1/4")×4 | | 6.35(1/4")×5 | 6.35(1/4")×6 |
| | Gas | | 9.52(3/8")×4 | | 9.52(3/8")×5 | 9.52(3/8")×6 |
| Outdoor operating temperature range | Cooling | ˚CDB | -15~43 | | | |
| | Heating | | -15~24 | | | |
| Number of Connectable indoor units | | | Min.2~Max.4 | Min.2~Max.4 | Min.4*~Max.5 | Min.4*~Max.6 |
| Total indoor units capacity | | kW | 12.5 | 13.5 | 16.0 | 19.5 |

- The data are measured under the following conditions(ISO-T1, H1). Cooling: Indoor temp. of 27˚CDB, 19˚CWB, and outdoor temp. of 35˚CDB. Heating: Indoor temp. of 20˚CDB, and outdoor temp. of 7˚CDB, 6˚CWB.
- Sound level Indicates the value in an anechoic chamber. During operation these values are somewhat higher due to ambient conditions.
- 'tonne(s) of $CO_2$ equivalent' means a quantity of greenhouse gases- expressed as the product of the weight of the greenhouse gases in metric tonnes and of their global warming potential.

* In case of SRK71ZR+SRK71ZR, 2 Indoor units can be connectable. In case of the combination with SRK-ZSX, SRK71ZR & FDE50VH, only 3 indoor units can be connectable. The total connecting capacity of indoor units should be between 100 ~ 160. (SCM100ZM-S, SCM125ZM-S)

R410A

# MULTI-SPLIT SYSTEM

## ■INDOOR UNITS SPECIFICATION FOR MULTI COMBINATIONS

Wall Mounted

## SRK-ZSX

| Item | | Model | SRK20ZSX-W,-WB,-WT | SRK25ZSX-W,-WB,-WT | SRK35ZSX-W,-WB,-WT | SRK50ZSX-W,-WB,-WT | SRK60ZSX-W,-WB,-WT |
|---|---|---|---|---|---|---|---|
| Nominal cooling capacity | | kW | 2.0 | 2.5 | 3.5 | 5.0 | 6.0 |
| Nominal heating capacity | | kW | 3.0 | 3.4 | 4.5 | 5.8 | 6.8 |
| Sound power level | Cooling | dB(A) | 53 | 55 | 58 | 59 | 62 |
| | Heating | dB(A) | 55 | 56 | 58 | 62 | 63 |
| Sound pressure level | Cooling(Hi/Me/Lo/Ulo) | dB(A) | 38 / 31 / 24 / 19 | 39 / 33 / 25 / 19 | 43 / 35 / 26 / 19 | 44 / 39 / 31 / 22 | 48 / 41 / 33 / 22 |
| | Heating(Hi/Me/Lo/Ulo) | dB(A) | 38 / 33 / 25 / 19 | 40 / 34 / 27 / 19 | 42 / 35 / 28 / 19 | 47 / 41 / 33 / 23 | 47 / 42 / 34 / 23 |
| Air flow | Cooling(Hi/Me/Lo/Ulo) | $m^3$/min | 11.3 / 9.1 / 6.0 / 5.0 | 12.2 / 10.0 / 6.7 / 5.0 | 13.1 / 10.8 / 7.3 / 5.0 | 14.3 / 12.4 / 7.8 / 5.4 | 16.3 / 13.4 / 8.9 / 5.4 |
| | Heating(Hi/Me/Lo/Ulo) | | 12.2 / 10.3 / 7.2 / 5.4 | 12.8 / 11.0 / 7.8 / 5.4 | 13.9 / 11.8 / 8.6 / 5.4 | 17.3 / 14.3 / 9.8 / 6.2 | 17.8 / 13.7 / 10.9 / 6.2 |
| Exterior dimensions (H×W×D) | | mm | 305×920×220 | | | | |
| Net weight | | kg | 13.0 | | | | |
| Refrigerant piping size | Liquid / Gas | Φmm | 6.35(1/4") / 9.52(3/8") | | | 6.35(1/4") / 12.7(1/2") | |
| Clean filter | | | Allergen Clear Filter ×1, Photocatalytic Washable Deodorising Filter×1 | | | | |

Wall Mounted

## SRK-ZR

| Item | | Model | SRK71ZR-W |
|---|---|---|---|
| Nominal cooling capacity | | kW | 7.1 |
| Nominal heating capacity | | kW | 8.0 |
| Sound power level | Cooling | dB(A) | 57 |
| | Heating | dB(A) | 60 |
| Sound pressure level | Cooling(Hi/Me/Lo/Ulo) | dB(A) | 44 / 41 / 37 / 25 |
| | Heating(Hi/Me/Lo/Ulo) | dB(A) | 46 / 39 / 35 / 28 |
| Air flow | Cooling(Hi/Me/Lo/Ulo) | $m^3$/min | 20.5 / 18.6 / 16.2 / 10.4 |
| | Heating(Hi/Me/Lo/Ulo) | | 25.0 / 19.8 / 17.3 / 13.3 |
| Exterior dimensions (H×W×D) | | mm | 339×1197×262 |
| Net weight | | kg | 15.5 |
| Refrigerant piping size | Liquid / Gas | Φmm | 6.35 (1/4") / 15.88 (5/8") |
| Clean filter | | | Allergen Clear Filter ×1, Photocatalytic Washable Deodorising Filter×1 |

Wall Mounted

## SRK-ZS

| Item | | Model | SRK20ZS-W,-WB,-WT | SRK25ZS-W,-WB,-WT | SRK35ZS-W,-WB,-WT | SRK50ZS-W,-WB,-WT |
|---|---|---|---|---|---|---|
| Nominal cooling capacity | | kW | 2.0 | 2.5 | 3.5 | 5.0 |
| Nominal heating capacity | | kW | 3.0 | 3.4 | 4.5 | 5.8 |
| Sound power level | Cooling | dB(A) | 48 | 50 | 54 | 59 |
| | Heating | dB(A) | 50 | 53 | 56 | 60 |
| Sound pressure level | Cooling(Hi/Me/Lo/Ulo) | dB(A) | 34 / 25 / 22 / 19 | 36 / 28 / 23 / 19 | 40 / 30 / 26 / 19 | 46 / 36 / 29 / 22 |
| | Heating(Hi/Me/Lo/Ulo) | dB(A) | 36 / 29 / 23 / 19 | 39 / 30 / 24 / 19 | 41 / 36 / 25 / 19 | 46 / 37 / 31 / 24 |
| Air flow | Cooling(Hi/Me/Lo/Ulo) | $m^3$/min | 9.3 / 7.0 / 5.9 / 5.0 | 9.9 / 8.0 / 5.9 / 5.0 | 11.3 / 8.7 / 7.0 / 5.0 | 12.1 / 9.9 / 7.4 / 5.9 |
| | Heating(Hi/Me/Lo/Ulo) | | 10.0 / 8.5 / 6.5 / 5.9 | 11.3 / 8.7 / 6.7 / 5.9 | 12.3 / 11.0 / 7.0 / 5.6 | 13.9 / 11.2 / 9.1 / 7.4 |
| Exterior dimensions (H×W×D) | | mm | 290×870×230 | | | |
| Net weight | | kg | 9.5 | | | 10.0 |
| Refrigerant piping size | Liquid / Gas | Φmm | 6.35(1/4") / 9.52(3/8") | | | 6.35(1/4") / 12.7(1/2") |
| Clean filter | | | Allergen Clear Filter × 1, Photocatalytic Washable Deodorising Filter × 1 | | | |

Wall Mounted

## SKM-ZSP

- **Elegant Timeless Design**
- **Compact and Light weight**

| Item | | Model | SKM20ZSP-W | SKM25ZSP-W | SKM35ZSP-W |
|---|---|---|---|---|---|
| Nominal cooling capacity | | kW | 2.0 | 2.5 | 3.5 |
| Nominal heating capacity | | kW | 3.0 | 3.4 | 4.5 |
| Sound power level | Cooling | dB(A) | 57 | 57 | 58 |
| | Heating | dB(A) | 56 | 56 | 58 |
| Sound pressure level | Cooling(Hi/Me/Lo) | dB(A) | 42 / 35 / 22 | 43 / 36 / 23 | 44 / 37 / 25 |
| | Heating(Hi/Me/Lo) | dB(A) | 41 / 36 / 26 | 41 / 36 / 27 | 42 / 37 / 30 |
| Air flow | Cooling(Hi/Me/Lo) | $m^3$/min | 8.5 / 7.0 / 5.0 | 8.5 / 7.0 / 5.0 | 9.0 / 7.5 / 5.0 |
| | Heating(Hi/Me/Lo) | | 8.0 / 7.0 / 5.5 | 8.0 / 7.0 / 5.5 | 8.5 / 7.0 / 6.0 |
| Exterior dimensions (H×W×D) | | mm | 267×783×210 | | |
| Net weight | | kg | 7.5 | | |
| Refrigerant piping size | Liquid / Gas | Φmm | 6.35(1/4")/9.52(3/8") | | |
| Clean filter | | | — | | |

NOTES
- The data are measured under the following conditions(ISO-T1, H1). Cooling: Indoor temp. of 27°CDB, 19°CWB, and outdoor temp. of 35°CDB. Heating: Indoor temp. of 20°CDB, and outdoor temp. of 7°CDB, 6°CWB.
- Sound level the value in an anechoic chamber.During operation these values are somewhat higher due to ambient conditions.

Floor Standing

# SRF-ZS/ZSX

| Item | | Model | SRF25ZS-W | SRF35ZS-W | SRF50ZSX-W |
|---|---|---|---|---|---|
| Nominal cooling capacity | | kW | 2.5 | 3.5 | 5.0 |
| Nominal heating capacity | | kW | 3.4 | 4.5 | 5.8 |
| Sound power level | Cooling | dB(A) | 50 | 51 | 58 |
| | Heating | dB(A) | 51 | 52 | 58 |
| Sound pressure level | Cooling(Hi/Me/Lo/Ulo) | dB(A) | 38 / 32 / 29 / 25 | 40 / 35 / 33 / 29 | 46 / 38 / 33 / 28 |
| | Heating(Hi/Me/Lo/Ulo) | dB(A) | 39 / 35 / 33 / 29 | 41 / 36 / 35 / 33 | 46 / 41 / 38 / 32 |
| Air flow | Cooling(Hi/Me/Lo/Ulo) | $m^3$/min | 9.0 / 7.6 / 6.7 / 5.8 | 9.2 / 7.8 / 7.3 / 6.4 | 11.5 / 9.6 / 7.4 / 6.6 |
| | Heating(Hi/Me/Lo/Ulo) | | 10.5 / 8.2 / 7.7 / 6.6 | 10.7 / 8.3 / 8.1 / 7.4 | 12.0 / 10.0 / 9.4 / 7.6 |
| Exterior dimensions(H×W×D) | | mm | 600×860×238 | | |
| Net weight | | kg | 18.0 | 19.0 | |
| Refrigerant piping size | Liquid / Gas | Φmm | 6.35(1/4") / 9.52(3/8") | | 6.35(1/4") / 12.7(1/2") |
| Clean filter | | | Allergen Clear Filter × 1 Photocatalytic Washable Deodorising Filter×1 | | |

Ceiling Concealed

# SRR-ZS

| Item | | Model | SRR25ZS-W | SRR35ZS-W | SRR50ZS-W | SRR60ZS-W |
|---|---|---|---|---|---|---|
| Nominal cooling capacity | | kW | 2.5 | 3.5 | 5.0 | 6.0 |
| Nominal heating capacity | | kW | 3.4 | 4.5 | 5.8 | 6.8 |
| Sound power level | Cooling | dB(A) | 56 | 57 | 59 | 60 |
| | Heating | dB(A) | 59 | 60 | 61 | 63 |
| Sound pressure level | Cooling(Hi/Me/Lo/Ulo) | dB(A) | 37 / 33 / 30 / 24 | 38 / 34 / 31 / 25 | 41 / 37 / 34 / 29 | 44 / 38 / 35 / 30 |
| | Heating(Hi/Me/Lo/Ulo) | dB(A) | 40 / 37 / 34 / 28 | 42 / 38 / 35 / 29 | 43 / 39 / 37 / 32 | 45 / 41 / 38 / 33 |
| Air flow | Cooling(Hi/Me/Lo/Ulo) | $m^3$/min | 9.5 / 8.0 / 6.5 / 4.5 | 10.0 / 8.5 / 7.0 / 5.0 | 13.5 / 11.0 / 10.0 / 7.5 | 14.5 / 11.5 / 10.5 / 8.0 |
| | Heating(Hi/Me/Lo/Ulo) | | 10.0 / 9.0 / 8.0 / 6.0 | 10.5 / 9.5 / 8.5 / 6.5 | 14.0 / 12.5 / 11.0 / 8.5 | 15.0 / 13.0 / 11.5 / 9.0 |
| Available external static pressure | | Pa | 35(Initial static pressure with air filter : 5Pa) | | 50(Initial static pressure with air filter : 5Pa) | |
| Exterior dimensions(H×W×D) | | mm | 200×750×500 | | 200×950×500 | |
| Net weight | | kg | 20.5 | | 24.0 | |
| Refrigerant piping size | Liquid / Gas | Φmm | 6.35(1/4") / 9.52(3/8") | | 6.35(1/4") / 12.7(1/2") | |
| Bottom air inlet kit (option) | | | UT-BAT1EF | | UT-BAT2EF | |

4way Ceiling Cassette

# FDTC-VH

**•Draft prevention panel (Option)**
**•Motion sensor (Option)**
**•More quiet noise & Improve the aerodynamic performance**

| Item | | Model | FDTC25VH1 | FDTC35VH1 | FDTC50VH | FDTC60VH |
|---|---|---|---|---|---|---|
| Nominal cooling capacity | | kW | 2.5 | 3.5 | 5.0 | 6.0 |
| Nominal heating capacity | | kW | 3.4 | 4.5 | 5.8 | 6.8 |
| Sound power level | Cooling | dB(A) | 51 | 52 | 59 | 60 |
| | Heating | dB(A) | 52 | 53 | 59 | 60 |
| Sound pressure level | Cooling(P-Hi/Hi/Me/Lo) | dB(A) | 38 / 34 / 30 / 27 | 39 / 36 / 32 / 29 | 44 / 40 / 35 / 27 | 46 / 42 / 38 / 31 |
| | Heating(P-Hi/Hi/Me/Lo) | dB(A) | 39 / 36 / 32 / 28 | 41 / 38 / 34 / 30 | 44 / 40 / 35 / 27 | 46 / 42 / 38 / 31 |
| Air flow | Cooling(P-Hi/Hi/Me/Lo) | $m^3$/min | 8.5 / 7.5 / 7.0 / 6.0 | 9.0 / 8.0 / 7.5 / 6.5 | 13.0 / 11.0 / 9.0 / 7.0 | 14.0 / 12.0 / 10.0 / 8.0 |
| | Heating(P-Hi/Hi/Me/Lo) | | 9.5 / 8.5 / 7.5 / 6.5 | 10.0 / 9.0 / 8.0 / 7.0 | 13.0 / 11.0 / 9.0 / 7.0 | 14.0 / 12.0 / 10.0 / 8.0 |
| Exterior dimensions(H×W×D) | | mm | Unit : 248×570×570 Panel : 10×620×620 | | | |
| Net weight | | kg | 16.5 (Unit.14 Panel:2.5) | | | |
| Refrigerant piping size | Liquid / Gas | Φmm | 6.35(1/4") / 9.52(3/8") | | 6.35(1/4") / 12.7(1/2") | |
| Panel | | | Standard Panel : TC-PSA-5AW-E(Honeycomb), TC-PSAG-5AW-E(Grid)<br>Draft Prevention Panel : TC-PSAE-5AW-E(Honeycomb), TC-PSAGE-5AW-E(Grid) | | | |

Duct Connected-Low/Middle Static Pressure / Ceiling Suspended

# FDUM-VH / FDE-VH

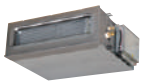

**•Motion sensor (Option)**

**•Motion sensor (Option)**

| Item | | Model | FDUM50VH | FDE50VH |
|---|---|---|---|---|
| Nominal cooling capacity | | kW | 5.0 | 5.0 |
| Nominal heating capacity | | kW | 5.8 | 5.8 |
| Sound power level | Cooling | dB(A) | 60 | 60 |
| | Heating | dB(A) | 60 | 60 |
| Sound pressure level | Cooling(P-Hi/Hi/Me/Lo) | dB(A) | 37 / 32 / 29 / 26 | 46 / 38/ 36/ 31 |
| | Heating(P-Hi/Hi/Me/Lo) | dB(A) | 37 / 32 / 29 / 26 | 46 / 38/ 36/ 31 |
| Air flow | Cooling(P-Hi/Hi/Me/Lo) | $m^3$/min | 13.0 / 10.0 / 9.0 / 8.0 | 13.0 / 10.0 / 9.0 / 7.0 |
| | Heating(P-Hi/Hi/Me/Lo) | | 13.0 / 10.0 / 9.0 / 8.0 | 13.0 / 10.0 / 9.0 / 7.0 |
| Available external static pressure | | Pa | Standard : 35 Max : 100 | — |
| Exterior dimensions (H×W×D) | | mm | 280×750×635 | 210×1070×690 |
| Net weight | | kg | 29.0 | 28.0 |
| Refrigerant piping size | Liquid / Gas | Φmm | 6.35(1/4") / 12.7(1/2") | 6.35(1/4") / 12.7(1/2") |
| Air filter | | | Filter KIT : UM-FL1EF (option) | Pocket Plastic net (Washable) × 2 |

# MULTI-SPLIT SYSTEM

## SCM40ZS-W Table of Indoor unit combination only with SRK-ZSX type

| Indoor unit combination | | | Heating capacity (kW) | | | | | Power consumption(W) | | | Standard current(A) | | |
|---|---|---|---|---|---|---|---|---|---|---|---|---|---|
| | | | Room heating capacity | | Total capacity | | | | | | | | |
| | | | A | B | Min. | Standard | Max. | Min. | Standard | Max. | 220V | 230V | 240V |
| Heating operation | 1*1 room | 20 | 3.00 | - | 1.0 | 3.0 | 4.5 | 250 | 680 | 1140 | 3.2 | 3.1 | 3.0 |
| | | 25 | 3.40 | - | 1.0 | 3.4 | 4.9 | 250 | 790 | 1270 | 3.7 | 3.5 | 3.4 |
| | | 35 | 4.50 | - | 1.0 | 4.5 | 5.4 | 250 | 1140 | 1470 | 5.3 | 5.1 | 4.8 |
| | 2*2 room | 20 + 20 | 2.25 | 2.25 | 1.2 | 4.5 | 6.3 | 250 | 830 | 1480 | 3.8 | 3.7 | 3.5 |
| | | 20 + 25 | 2.00 | 2.50 | 1.2 | 4.5 | 6.3 | 250 | 830 | 1480 | 3.8 | 3.7 | 3.5 |
| | | 20 + 35 | 1.64 | 2.86 | 1.2 | 4.5 | 6.3 | 250 | 830 | 1480 | 3.8 | 3.7 | 3.5 |
| | | 25 + 25 | 2.25 | 2.25 | 1.2 | 4.5 | 6.3 | 250 | 830 | 1480 | 3.8 | 3.7 | 3.5 |
| | | 25 + 35 | 1.88 | 2.63 | 1.2 | 4.5 | 6.3 | 250 | 830 | 1480 | 3.8 | 3.7 | 3.5 |

The values are for 1 indoor unit (*1) and 2 indoor units (*2) operation.
The same hereinafter.

| Indoor unit combination | | | Cooling capacity (kW) | | | | | Power consumption(W) | | | Standard current(A) | | |
|---|---|---|---|---|---|---|---|---|---|---|---|---|---|
| | | | Room cooling capacity | | Total capacity | | | | | | | | |
| | | | A | B | Min. | Standard | Max. | Min. | Standard | Max. | 220V | 230V | 240V |
| Cooling operation | 1 room | 20 | 2.00 | - | 1.5 | 2.0 | 3.4 | 340 | 430 | 930 | 2.2 | 2.1 | 2.0 |
| | | 25 | 2.50 | - | 1.5 | 2.5 | 3.8 | 340 | 600 | 1110 | 3.0 | 2.9 | 2.8 |
| | | 35 | 3.50 | - | 1.5 | 3.5 | 4.5 | 340 | 1000 | 1470 | 4.7 | 4.5 | 4.3 |
| | 2 room | 20 + 20 | 2.00 | 2.00 | 1.7 | 4.0 | 5.9 | 340 | 800 | 2100 | 3.7 | 3.5 | 3.4 |
| | | 20 + 25 | 1.78 | 2.22 | 1.7 | 4.0 | 5.9 | 340 | 800 | 2100 | 3.7 | 3.5 | 3.4 |
| | | 20 + 35 | 1.45 | 2.55 | 1.7 | 4.0 | 5.9 | 340 | 800 | 2100 | 3.7 | 3.5 | 3.4 |
| | | 25 + 25 | 2.00 | 2.00 | 1.7 | 4.0 | 5.9 | 340 | 800 | 2100 | 3.7 | 3.5 | 3.4 |
| | | 25 + 35 | 1.67 | 2.33 | 1.7 | 4.0 | 5.9 | 340 | 800 | 2100 | 3.7 | 3.5 | 3.4 |

## SCM40ZS-W Table of Indoor unit combination with other indoor unit

| Indoor unit combination | | | Heating capacity (kW) | | | | | Power consumption(W) | | | Standard current(A) | | |
|---|---|---|---|---|---|---|---|---|---|---|---|---|---|
| | | | Room heating capacity | | Total capacity | | | | | | | | |
| | | | A | B | Min. | Standard | Max. | Min. | Standard | Max. | 220V | 230V | 240V |
| Heating operation | 1 room | 20 | 3.00 | - | 1.0 | 3.0 | 3.5 | 250 | 780 | 940 | 3.8 | 3.6 | 3.5 |
| | | 25 | 3.40 | - | 1.0 | 3.4 | 4.0 | 250 | 910 | 1120 | 4.4 | 4.2 | 4.1 |
| | | 35 | 4.50 | - | 1.0 | 4.5 | 4.8 | 250 | 1310 | 1350 | 6.4 | 6.1 | 5.9 |
| | 2 room | 20 + 20 | 2.25 | 2.25 | 1.2 | 4.5 | 5.5 | 250 | 990 | 1270 | 4.8 | 4.6 | 4.4 |
| | | 20 + 25 | 2.00 | 2.50 | 1.2 | 4.5 | 6.3 | 250 | 990 | 1630 | 4.7 | 4.5 | 4.3 |
| | | 20 + 35 | 1.64 | 2.86 | 1.2 | 4.5 | 6.3 | 250 | 990 | 1630 | 4.6 | 4.4 | 4.2 |
| | | 25 + 25 | 2.25 | 2.25 | 1.2 | 4.5 | 6.3 | 250 | 990 | 1630 | 4.6 | 4.4 | 4.2 |
| | | 25 + 35 | 1.88 | 2.63 | 1.2 | 4.5 | 6.3 | 250 | 990 | 1630 | 4.6 | 4.4 | 4.2 |

| Indoor unit combination | | | Cooling capacity (kW) | | | | | Power consumption(W) | | | Standard current(A) | | |
|---|---|---|---|---|---|---|---|---|---|---|---|---|---|
| | | | Room cooling capacity | | Total capacity | | | | | | | | |
| | | | A | B | Min. | Standard | Max. | Min. | Standard | Max. | 220V | 230V | 240V |
| Cooling operation | 1 room | 20 | 2.00 | - | 1.5 | 2.0 | 3.1 | 340 | 510 | 990 | 2.5 | 2.4 | 2.3 |
| | | 25 | 2.50 | - | 1.5 | 2.5 | 3.4 | 340 | 710 | 1120 | 3.4 | 3.2 | 3.1 |
| | | 35 | 3.50 | - | 1.5 | 3.5 | 4.1 | 340 | 1190 | 1570 | 5.5 | 5.3 | 5.0 |
| | 2 room | 20 + 20 | 2.00 | 2.00 | 1.7 | 4.0 | 5.4 | 340 | 1000 | 1920 | 4.6 | 4.4 | 4.2 |
| | | 20 + 25 | 1.78 | 2.22 | 1.7 | 4.0 | 5.6 | 340 | 1000 | 2100 | 4.6 | 4.4 | 4.2 |
| | | 20 + 35 | 1.45 | 2.55 | 1.7 | 4.0 | 5.6 | 340 | 1000 | 2100 | 4.6 | 4.4 | 4.2 |
| | | 25 + 25 | 2.00 | 2.00 | 1.7 | 4.0 | 5.6 | 340 | 1000 | 2100 | 4.6 | 4.4 | 4.2 |
| | | 25 + 35 | 1.67 | 2.33 | 1.7 | 4.0 | 5.6 | 340 | 1000 | 2100 | 4.6 | 4.4 | 4.2 |

## SCM45ZS-W Table of Indoor unit combination only with SRK-ZSX type

| Indoor unit combination | | | Heating capacity (kW) | | | | | Power consumption(W) | | | Standard current(A) | | |
|---|---|---|---|---|---|---|---|---|---|---|---|---|---|
| | | | Room heating capacity | | Total capacity | | | | | | | | |
| | | | A | B | Min. | Standard | Max. | Min. | Standard | Max. | 220V | 230V | 240V |
| Heating operation | 1 room | 20 | 3.00 | - | 1.0 | 3.0 | 4.5 | 250 | 680 | 1140 | 3.2 | 3.1 | 3.0 |
| | | 25 | 3.40 | - | 1.0 | 3.4 | 4.9 | 250 | 790 | 1270 | 3.7 | 3.5 | 3.4 |
| | | 35 | 4.50 | - | 1.0 | 4.5 | 5.4 | 250 | 1140 | 1470 | 5.3 | 5.1 | 4.8 |
| | 2 room | 20 + 20 | 2.25 | 2.25 | 1.2 | 4.5 | 6.5 | 250 | 830 | 1480 | 3.8 | 3.7 | 3.5 |
| | | 20 + 25 | 2.36 | 2.94 | 1.2 | 5.3 | 6.5 | 250 | 1060 | 1480 | 4.9 | 4.7 | 4.5 |
| | | 20 + 35 | 1.93 | 3.37 | 1.2 | 5.3 | 6.5 | 250 | 1060 | 1480 | 4.9 | 4.7 | 4.5 |
| | | 25 + 25 | 2.65 | 2.65 | 1.2 | 5.3 | 6.5 | 250 | 1060 | 1480 | 4.9 | 4.7 | 4.5 |
| | | 25 + 35 | 2.21 | 3.09 | 1.2 | 5.3 | 6.5 | 250 | 1060 | 1480 | 4.9 | 4.7 | 4.5 |
| | | 35 + 35 | 2.65 | 2.65 | 1.2 | 5.3 | 6.5 | 250 | 1060 | 1480 | 4.9 | 4.7 | 4.5 |

| Indoor unit combination | | | Cooling capacity (kW) | | | | | Power consumption(W) | | | Standard current(A) | | |
|---|---|---|---|---|---|---|---|---|---|---|---|---|---|
| | | | Room cooling capacity | | Total capacity | | | | | | | | |
| | | | A | B | Min. | Standard | Max. | Min. | Standard | Max. | 220V | 230V | 240V |
| Cooling operation | 1 room | 20 | 2.00 | - | 1.5 | 2.0 | 3.4 | 340 | 430 | 930 | 2.2 | 2.1 | 2.0 |
| | | 25 | 2.50 | - | 1.5 | 2.5 | 3.8 | 340 | 600 | 1110 | 3.0 | 2.9 | 2.8 |
| | | 35 | 3.50 | - | 1.5 | 3.5 | 4.5 | 340 | 1000 | 1470 | 4.7 | 4.5 | 4.3 |
| | 2 room | 20 + 20 | 2.00 | 2.00 | 1.7 | 4.0 | 6.2 | 340 | 860 | 2100 | 4.0 | 3.8 | 3.7 |
| | | 20 + 25 | 2.00 | 2.50 | 1.7 | 4.5 | 6.4 | 340 | 960 | 2300 | 4.5 | 4.3 | 4.1 |
| | | 20 + 35 | 1.64 | 2.86 | 1.7 | 4.5 | 6.4 | 340 | 960 | 2300 | 4.5 | 4.3 | 4.1 |
| | | 25 + 25 | 2.25 | 2.25 | 1.7 | 4.5 | 6.4 | 340 | 960 | 2300 | 4.5 | 4.3 | 4.1 |
| | | 25 + 35 | 1.88 | 2.63 | 1.7 | 4.5 | 6.4 | 340 | 960 | 2300 | 4.5 | 4.3 | 4.1 |
| | | 35 + 35 | 2.25 | 2.25 | 1.7 | 4.5 | 6.4 | 340 | 960 | 2300 | 4.5 | 4.3 | 4.1 |

## SCM45ZS-W Table of Indoor unit combination with other indoor unit

| Indoor unit combination | | | Heating capacity (kW) | | | | | Power consumption(W) | | | Standard current(A) | | |
|---|---|---|---|---|---|---|---|---|---|---|---|---|---|
| | | | Room heating capacity | | Total capacity | | | | | | | | |
| | | | A | B | Min. | Standard | Max. | Min. | Standard | Max. | 220V | 230V | 240V |
| Heating operation | 1 room | 20 | 3.00 | - | 1.0 | 3.0 | 3.5 | 250 | 780 | 940 | 3.7 | 3.5 | 3.4 |
| | | 25 | 3.40 | - | 1.0 | 3.4 | 4.0 | 250 | 910 | 1120 | 4.3 | 4.1 | 3.9 |
| | | 35 | 4.50 | - | 1.0 | 4.5 | 4.8 | 250 | 1310 | 1350 | 6.1 | 5.8 | 5.6 |
| | 2 room | 20 + 20 | 2.25 | 2.25 | 1.2 | 4.5 | 5.5 | 250 | 990 | 1270 | 4.6 | 4.4 | 4.2 |
| | | 20 + 25 | 2.36 | 2.94 | 1.2 | 5.3 | 6.5 | 250 | 1280 | 1630 | 5.9 | 5.7 | 5.4 |
| | | 20 + 35 | 1.93 | 3.37 | 1.2 | 5.3 | 6.5 | 250 | 1280 | 1630 | 5.9 | 5.7 | 5.4 |
| | | 25 + 25 | 2.65 | 2.65 | 1.2 | 5.3 | 6.5 | 250 | 1280 | 1630 | 5.9 | 5.7 | 5.4 |
| | | 25 + 35 | 2.21 | 3.09 | 1.2 | 5.3 | 6.5 | 250 | 1280 | 1630 | 5.9 | 5.7 | 5.4 |
| | | 35 + 35 | 2.65 | 2.65 | 1.2 | 5.3 | 6.5 | 250 | 1280 | 1630 | 5.9 | 5.7 | 5.4 |

| Indoor unit combination | | | Cooling capacity (kW) | | | | | Power consumption(W) | | | Standard current(A) | | |
|---|---|---|---|---|---|---|---|---|---|---|---|---|---|
| | | | Room cooling capacity | | Total capacity | | | | | | | | |
| | | | A | B | Min. | Standard | Max. | Min. | Standard | Max. | 220V | 230V | 240V |
| Cooling operation | 1 room | 20 | 2.00 | - | 1.5 | 2.0 | 3.1 | 340 | 510 | 990 | 2.5 | 2.4 | 2.3 |
| | | 25 | 2.50 | - | 1.5 | 2.5 | 3.4 | 340 | 710 | 1120 | 3.4 | 3.2 | 3.1 |
| | | 35 | 3.50 | - | 1.5 | 3.5 | 4.1 | 340 | 1190 | 1570 | 5.5 | 5.3 | 5.0 |
| | 2 room | 20 + 20 | 2.00 | 2.00 | 1.7 | 4.0 | 5.4 | 340 | 1050 | 1920 | 4.8 | 4.6 | 4.4 |
| | | 20 + 25 | 2.00 | 2.50 | 1.7 | 4.5 | 5.6 | 340 | 1200 | 2300 | 5.5 | 5.3 | 5.1 |
| | | 20 + 35 | 1.64 | 2.86 | 1.7 | 4.5 | 5.6 | 340 | 1200 | 2300 | 5.5 | 5.3 | 5.1 |
| | | 25 + 25 | 2.25 | 2.25 | 1.7 | 4.5 | 5.6 | 340 | 1200 | 2300 | 5.5 | 5.3 | 5.1 |
| | | 25 + 35 | 1.88 | 2.63 | 1.7 | 4.5 | 5.6 | 340 | 1200 | 2300 | 5.5 | 5.3 | 5.1 |
| | | 35 + 35 | 2.25 | 2.25 | 1.7 | 4.5 | 5.6 | 340 | 1200 | 2300 | 5.5 | 5.3 | 5.1 |

## SCM50ZS-W Table of Indoor unit combination only with SRK-ZSX type

| Indoor unit combination | | | Heating capacity (kW) | | | | | | Power consumption(W) | | | Standard current(A) | | |
|---|---|---|---|---|---|---|---|---|---|---|---|---|---|---|
| | | | Room heating capacity | | | Total capacity | | | | | | | | |
| | | | A | B | C | Min. | Standard | Max. | Min. | Standard | Max. | 220V | 230V | 240V |
| Heating operation | 1 room | 20 | 3.00 | - | - | 1.0 | 3.0 | 3.7 | 320 | 780 | 1100 | 3.6 | 3.5 | 3.3 |
| | | 25 | 3.40 | - | - | 1.0 | 3.4 | 4.2 | 320 | 950 | 1240 | 4.4 | 4.2 | 4.0 |
| | | 35 | 4.50 | - | - | 1.0 | 4.5 | 5.0 | 320 | 1270 | 1490 | 5.9 | 5.6 | 5.4 |
| | | 50 | 5.80 | - | - | 1.0 | 5.8 | 6.5 | 320 | 1710 | 2310 | 7.9 | 7.6 | 7.3 |
| | 2 room | 20 + 20 | 2.70 | 2.70 | - | 1.2 | 5.4 | 7.3 | 290 | 1050 | 2500 | 4.9 | 4.7 | 4.5 |
| | | 20 + 25 | 2.62 | 3.28 | - | 1.2 | 5.9 | 7.3 | 290 | 1180 | 2500 | 5.5 | 5.2 | 5.0 |
| | | 20 + 35 | 2.18 | 3.82 | - | 1.2 | 6.0 | 7.3 | 290 | 1200 | 2500 | 5.6 | 5.3 | 5.1 |
| | | 20 + 50 | 1.71 | 4.29 | - | 1.2 | 6.0 | 7.3 | 290 | 1200 | 2500 | 5.6 | 5.3 | 5.1 |
| | | 25 + 25 | 3.00 | 3.00 | - | 1.2 | 6.0 | 7.3 | 290 | 1200 | 2500 | 5.6 | 5.3 | 5.1 |
| | | 25 + 35 | 2.50 | 3.50 | - | 1.2 | 6.0 | 7.3 | 290 | 1200 | 2500 | 5.6 | 5.3 | 5.1 |
| | | 25 + 50 | 2.00 | 4.00 | - | 1.2 | 6.0 | 7.3 | 290 | 1200 | 2500 | 5.6 | 5.3 | 5.1 |
| | | 35 + 35 | 3.00 | 3.00 | - | 1.2 | 6.0 | 7.3 | 290 | 1200 | 2500 | 5.6 | 5.3 | 5.1 |
| | | 35 + 50 | 2.47 | 3.53 | - | 1.2 | 6.0 | 7.3 | 290 | 1200 | 2500 | 5.6 | 5.3 | 5.1 |
| | 3 room | 20 + 20 + 20 | 2.00 | 2.00 | 2.00 | 1.4 | 6.0 | 7.5 | 270 | 1160 | 2500 | 5.4 | 5.1 | 4.9 |
| | | 20 + 20 + 25 | 1.85 | 1.85 | 2.31 | 1.4 | 6.0 | 7.5 | 270 | 1160 | 2500 | 5.4 | 5.1 | 4.9 |
| | | 20 + 20 + 35 | 1.60 | 1.60 | 2.80 | 1.4 | 6.0 | 7.5 | 270 | 1160 | 2500 | 5.4 | 5.1 | 4.9 |
| | | 20 + 25 + 25 | 1.71 | 2.14 | 2.14 | 1.4 | 6.0 | 7.5 | 270 | 1160 | 2500 | 5.4 | 5.1 | 4.9 |
| | | 20 + 25 + 35 | 1.50 | 1.88 | 2.63 | 1.4 | 6.0 | 7.5 | 270 | 1160 | 2500 | 5.4 | 5.1 | 4.9 |
| | | 25 + 25 + 25 | 2.00 | 2.00 | 2.00 | 1.4 | 6.0 | 7.5 | 270 | 1160 | 2500 | 5.4 | 5.1 | 4.9 |
| | | 25 + 25 + 35 | 1.76 | 1.76 | 2.47 | 1.4 | 6.0 | 7.5 | 270 | 1160 | 2500 | 5.4 | 5.1 | 4.9 |

| Indoor unit combination | | | Cooling capacity (kW) | | | | | | Power consumption(W) | | | Standard current(A) | | |
|---|---|---|---|---|---|---|---|---|---|---|---|---|---|---|
| | | | Room cooling capacity | | | Total capacity | | | | | | | | |
| | | | A | B | C | Min. | Standard | Max. | Min. | Standard | Max. | 220V | 230V | 240V |
| Cooling operation | 1 room | 20 | 2.00 | - | - | 1.7 | 2.0 | 2.8 | 430 | 500 | 950 | 2.4 | 2.3 | 2.2 |
| | | 25 | 2.50 | - | - | 1.7 | 2.5 | 3.4 | 430 | 680 | 1070 | 3.2 | 3.1 | 3.0 |
| | | 35 | 3.50 | - | - | 1.7 | 3.5 | 3.9 | 430 | 1010 | 1230 | 4.7 | 4.5 | 4.3 |
| | | 50 | 5.00 | - | - | 1.7 | 5.0 | 5.5 | 430 | 1530 | 2000 | 7.0 | 6.7 | 6.4 |
| | 2 room | 20 + 20 | 2.00 | 2.00 | - | 1.8 | 4.0 | 5.7 | 390 | 750 | 1750 | 3.5 | 3.3 | 3.2 |
| | | 20 + 25 | 2.00 | 2.50 | - | 1.8 | 4.5 | 5.9 | 390 | 990 | 1910 | 4.6 | 4.4 | 4.2 |
| | | 20 + 35 | 1.82 | 3.18 | - | 1.8 | 5.0 | 6.5 | 390 | 1110 | 2150 | 5.1 | 4.9 | 4.7 |
| | | 20 + 50 | 1.43 | 3.57 | - | 1.8 | 5.0 | 6.5 | 390 | 1110 | 2150 | 5.1 | 4.9 | 4.7 |
| | | 25 + 25 | 2.50 | 2.50 | - | 1.8 | 5.0 | 6.5 | 390 | 1110 | 2150 | 5.1 | 4.9 | 4.7 |
| | | 25 + 35 | 2.08 | 2.92 | - | 1.8 | 5.0 | 6.5 | 390 | 1110 | 2150 | 5.1 | 4.9 | 4.7 |
| | | 25 + 50 | 1.67 | 3.33 | - | 1.8 | 5.0 | 6.5 | 390 | 1110 | 2150 | 5.1 | 4.9 | 4.7 |
| | | 35 + 35 | 2.50 | 2.50 | - | 1.8 | 5.0 | 6.5 | 390 | 1110 | 2150 | 5.1 | 4.9 | 4.7 |
| | | 35 + 50 | 2.06 | 2.94 | - | 1.8 | 5.0 | 6.5 | 390 | 1110 | 2150 | 5.1 | 4.9 | 4.7 |
| | 3 room | 20 + 20 + 20 | 1.67 | 1.67 | 1.67 | 2.1 | 5.0 | 7.1 | 350 | 1020 | 2150 | 4.7 | 4.5 | 4.3 |
| | | 20 + 20 + 25 | 1.54 | 1.54 | 1.92 | 2.1 | 5.0 | 7.1 | 350 | 1020 | 2150 | 4.7 | 4.5 | 4.3 |
| | | 20 + 20 + 35 | 1.33 | 1.33 | 2.33 | 2.1 | 5.0 | 7.1 | 350 | 1020 | 2150 | 4.7 | 4.5 | 4.3 |
| | | 20 + 25 + 25 | 1.43 | 1.79 | 1.79 | 2.1 | 5.0 | 7.1 | 350 | 1020 | 2150 | 4.7 | 4.5 | 4.3 |
| | | 20 + 25 + 35 | 1.25 | 1.56 | 2.19 | 2.1 | 5.0 | 7.1 | 350 | 1020 | 2150 | 4.7 | 4.5 | 4.3 |
| | | 25 + 25 + 25 | 1.67 | 1.67 | 1.67 | 2.1 | 5.0 | 7.1 | 350 | 1020 | 2150 | 4.7 | 4.5 | 4.3 |
| | | 25 + 25 + 35 | 1.47 | 1.47 | 2.06 | 2.1 | 5.0 | 7.1 | 350 | 1020 | 2150 | 4.7 | 4.5 | 4.3 |

## SCM50ZS-W Table of Indoor unit combination with other indoor unit

| Indoor unit combination | | | Heating capacity (kW) | | | | | | Power consumption(W) | | | Standard current(A) | | |
|---|---|---|---|---|---|---|---|---|---|---|---|---|---|---|
| | | | Room heating capacity | | | Total capacity | | | | | | | | |
| | | | A | B | C | Min. | Standard | Max. | Min. | Standard | Max. | 220V | 230V | 240V |
| Heating operation | 1 room | 20 | 3.00 | - | - | 1.0 | 3.0 | 3.5 | 320 | 970 | 1100 | 4.5 | 4.3 | 4.1 |
| | | 25 | 3.40 | - | - | 1.0 | 3.4 | 4.0 | 320 | 1140 | 1240 | 5.3 | 5.1 | 4.8 |
| | | 35 | 4.50 | - | - | 1.0 | 4.5 | 4.8 | 320 | 1480 | 1490 | 6.9 | 6.6 | 6.3 |
| | | 50 | 5.80 | - | - | 1.0 | 5.8 | 6.1 | 320 | 1780 | 2310 | 8.3 | 7.9 | 7.6 |
| | 2 room | 20 + 20 | 2.70 | 2.70 | - | 1.2 | 5.4 | 7.0 | 290 | 1350 | 2500 | 6.3 | 6.0 | 5.7 |
| | | 20 + 25 | 2.62 | 3.28 | - | 1.2 | 5.9 | 7.0 | 290 | 1480 | 2500 | 6.9 | 6.6 | 6.3 |
| | | 20 + 35 | 2.18 | 3.82 | - | 1.2 | 6.0 | 7.0 | 290 | 1500 | 2500 | 7.0 | 6.7 | 6.4 |
| | | 20 + 50 | 1.71 | 4.29 | - | 1.2 | 6.0 | 7.0 | 290 | 1500 | 2500 | 7.0 | 6.7 | 6.4 |
| | | 25 + 25 | 3.00 | 3.00 | - | 1.2 | 6.0 | 7.0 | 290 | 1500 | 2500 | 7.0 | 6.7 | 6.4 |
| | | 25 + 35 | 2.50 | 3.50 | - | 1.2 | 6.0 | 7.0 | 290 | 1500 | 2500 | 7.0 | 6.7 | 6.4 |
| | | 25 + 50 | 2.00 | 4.00 | - | 1.2 | 6.0 | 7.0 | 290 | 1500 | 2500 | 7.0 | 6.7 | 6.4 |
| | | 35 + 35 | 3.00 | 3.00 | - | 1.2 | 6.0 | 7.0 | 290 | 1500 | 2500 | 7.0 | 6.7 | 6.4 |
| | | 35 + 50 | 2.47 | 3.53 | - | 1.2 | 6.0 | 7.0 | 290 | 1500 | 2500 | 7.0 | 6.7 | 6.4 |
| | 3 room | 20 + 20 + 20 | 2.00 | 2.00 | 2.00 | 1.4 | 6.0 | 7.3 | 270 | 1300 | 2500 | 6.0 | 5.8 | 5.5 |
| | | 20 + 20 + 25 | 1.85 | 1.85 | 2.31 | 1.4 | 6.0 | 7.3 | 270 | 1300 | 2500 | 6.0 | 5.8 | 5.5 |
| | | 20 + 20 + 35 | 1.60 | 1.60 | 2.80 | 1.4 | 6.0 | 7.3 | 270 | 1300 | 2500 | 6.0 | 5.8 | 5.5 |
| | | 20 + 25 + 25 | 1.71 | 2.14 | 2.14 | 1.4 | 6.0 | 7.3 | 270 | 1300 | 2500 | 6.0 | 5.8 | 5.5 |
| | | 20 + 25 + 35 | 1.50 | 1.88 | 2.63 | 1.4 | 6.0 | 7.3 | 270 | 1300 | 2500 | 6.0 | 5.8 | 5.5 |
| | | 25 + 25 + 25 | 2.00 | 2.00 | 2.00 | 1.4 | 6.0 | 7.3 | 270 | 1300 | 2500 | 6.0 | 5.8 | 5.5 |
| | | 25 + 25 + 35 | 1.76 | 1.76 | 2.47 | 1.4 | 6.0 | 7.3 | 270 | 1300 | 2500 | 6.0 | 5.8 | 5.5 |

| Indoor unit combination | | | Cooling capacity (kW) | | | | | | Power consumption(W) | | | Standard current(A) | | |
|---|---|---|---|---|---|---|---|---|---|---|---|---|---|---|
| | | | Room cooling capacity | | | Total capacity | | | | | | | | |
| | | | A | B | C | Min. | Standard | Max. | Min. | Standard | Max. | 220V | 230V | 240V |
| Cooling operation | 1 room | 20 | 2.00 | - | - | 1.7 | 2.0 | 2.7 | 430 | 530 | 900 | 2.5 | 2.4 | 2.3 |
| | | 25 | 2.50 | - | - | 1.7 | 2.5 | 3.2 | 430 | 730 | 1070 | 3.4 | 3.3 | 3.1 |
| | | 35 | 3.50 | - | - | 1.7 | 3.5 | 3.7 | 430 | 1120 | 1230 | 5.2 | 4.9 | 4.7 |
| | | 50 | 5.00 | - | - | 1.7 | 5.0 | 5.3 | 430 | 1710 | 2000 | 7.9 | 7.5 | 7.2 |
| | 2 room | 20 + 20 | 2.00 | 2.00 | - | 1.8 | 4.0 | 5.6 | 390 | 950 | 1800 | 4.4 | 4.2 | 4.0 |
| | | 20 + 25 | 2.00 | 2.50 | - | 1.8 | 4.5 | 5.8 | 390 | 1110 | 1980 | 5.1 | 4.9 | 4.7 |
| | | 20 + 35 | 1.82 | 3.18 | - | 1.8 | 5.0 | 6.3 | 390 | 1350 | 2150 | 6.2 | 5.9 | 5.7 |
| | | 20 + 50 | 1.43 | 3.57 | - | 1.8 | 5.0 | 6.3 | 390 | 1350 | 2150 | 6.2 | 5.9 | 5.7 |
| | | 25 + 25 | 2.50 | 2.50 | - | 1.8 | 5.0 | 6.3 | 390 | 1350 | 2150 | 6.2 | 5.9 | 5.7 |
| | | 25 + 35 | 2.08 | 2.92 | - | 1.8 | 5.0 | 6.3 | 390 | 1350 | 2150 | 6.2 | 5.9 | 5.7 |
| | | 25 + 50 | 1.67 | 3.33 | - | 1.8 | 5.0 | 6.3 | 390 | 1350 | 2150 | 6.2 | 5.9 | 5.7 |
| | | 35 + 35 | 2.50 | 2.50 | - | 1.8 | 5.0 | 6.3 | 390 | 1350 | 2150 | 6.2 | 5.9 | 5.7 |
| | | 35 + 50 | 2.06 | 2.94 | - | 1.8 | 5.0 | 6.3 | 390 | 1350 | 2150 | 6.2 | 5.9 | 5.7 |
| | 3 room | 20 + 20 + 20 | 1.67 | 1.67 | 1.67 | 2.1 | 5.0 | 6.9 | 350 | 1120 | 2150 | 5.1 | 4.9 | 4.7 |
| | | 20 + 20 + 25 | 1.54 | 1.54 | 1.92 | 2.1 | 5.0 | 6.9 | 350 | 1120 | 2150 | 5.1 | 4.9 | 4.7 |
| | | 20 + 20 + 35 | 1.33 | 1.33 | 2.33 | 2.1 | 5.0 | 6.9 | 350 | 1120 | 2150 | 5.1 | 4.9 | 4.7 |
| | | 20 + 25 + 25 | 1.43 | 1.79 | 1.79 | 2.1 | 5.0 | 6.9 | 350 | 1120 | 2150 | 5.1 | 4.9 | 4.7 |
| | | 20 + 25 + 35 | 1.25 | 1.56 | 2.19 | 2.1 | 5.0 | 6.9 | 350 | 1120 | 2150 | 5.1 | 4.9 | 4.7 |
| | | 25 + 25 + 25 | 1.67 | 1.67 | 1.67 | 2.1 | 5.0 | 6.9 | 350 | 1120 | 2150 | 5.1 | 4.9 | 4.7 |
| | | 25 + 25 + 35 | 1.47 | 1.47 | 2.06 | 2.1 | 5.0 | 6.9 | 350 | 1120 | 2150 | 5.1 | 4.9 | 4.7 |

## SCM60ZS-W Table of Indoor unit combination only with SRK-ZSX type

| Indoor unit combination | | | Heating capacity (kW) | | | | | | Power consumption(W) | | | Standard current(A) | | |
|---|---|---|---|---|---|---|---|---|---|---|---|---|---|---|
| | | | Room heating capacity | | | Total capacity | | | | | | | | |
| | | | A | B | C | Min. | Standard | Max. | Min. | Standard | Max. | 220V | 230V | 240V |
| Heating operation | 1 room | 20 | 3.00 | - | - | 1.0 | 3.0 | 3.7 | 320 | 780 | 1100 | 3.6 | 3.5 | 3.3 |
| | | 25 | 3.40 | - | - | 1.0 | 3.4 | 4.2 | 320 | 950 | 1240 | 4.4 | 4.2 | 4.0 |
| | | 35 | 4.50 | - | - | 1.0 | 4.5 | 5.0 | 320 | 1270 | 1490 | 5.9 | 5.6 | 5.4 |
| | | 50 | 5.80 | - | - | 1.0 | 5.8 | 6.5 | 320 | 1710 | 2310 | 7.9 | 7.6 | 7.3 |
| | | 60 | 6.80 | - | - | 1.0 | 6.8 | 7.3 | 320 | 2040 | 2660 | 9.5 | 9.1 | 8.7 |
| | 2 room | 20 + 20 | 2.70 | 2.70 | - | 1.2 | 5.4 | 7.3 | 290 | 1050 | 2100 | 4.9 | 4.7 | 4.5 |
| | | 20 + 25 | 2.62 | 3.28 | - | 1.2 | 5.9 | 7.5 | 290 | 1180 | 2550 | 5.5 | 5.2 | 5.0 |
| | | 20 + 35 | 2.40 | 4.20 | - | 1.2 | 6.6 | 7.6 | 290 | 1360 | 2800 | 6.3 | 6.0 | 5.8 |
| | | 20 + 50 | 1.94 | 4.86 | - | 1.2 | 6.8 | 7.6 | 290 | 1440 | 2800 | 6.7 | 6.4 | 6.1 |
| | | 20 + 60 | 1.70 | 5.10 | - | 1.2 | 6.8 | 7.6 | 290 | 1440 | 2800 | 6.7 | 6.4 | 6.1 |
| | | 25 + 25 | 3.20 | 3.20 | - | 1.2 | 6.4 | 7.6 | 290 | 1310 | 2800 | 6.1 | 5.8 | 5.6 |
| | | 25 + 35 | 2.83 | 3.97 | - | 1.2 | 6.8 | 7.6 | 290 | 1440 | 2800 | 6.7 | 6.4 | 6.1 |
| | | 25 + 50 | 2.27 | 4.53 | - | 1.2 | 6.8 | 7.6 | 290 | 1440 | 2800 | 6.7 | 6.4 | 6.1 |
| | | 25 + 60 | 2.00 | 4.80 | - | 1.2 | 6.8 | 7.6 | 290 | 1440 | 2800 | 6.7 | 6.4 | 6.1 |
| | | 35 + 35 | 3.40 | 3.40 | - | 1.2 | 6.8 | 7.6 | 290 | 1440 | 2800 | 6.7 | 6.4 | 6.1 |
| | | 35 + 50 | 2.80 | 4.00 | - | 1.2 | 6.8 | 7.6 | 290 | 1440 | 2800 | 6.7 | 6.4 | 6.1 |
| | | 35 + 60 | 2.51 | 4.29 | - | 1.2 | 6.8 | 7.6 | 290 | 1440 | 2800 | 6.7 | 6.4 | 6.1 |
| | | 50 + 50 | 3.40 | 3.40 | - | 1.2 | 6.8 | 7.6 | 290 | 1440 | 2800 | 6.7 | 6.4 | 6.1 |
| | | 50 + 60 | 3.09 | 3.71 | - | 1.2 | 6.8 | 7.6 | 290 | 1440 | 2800 | 6.7 | 6.4 | 6.1 |

| Indoor unit combination | | | Heating capacity (kW) | | | | | | Power consumption(W) | | | Standard current(A) | | |
|---|---|---|---|---|---|---|---|---|---|---|---|---|---|---|
| | | | Room heating capacity | | | Total capacity | | | | | | | | |
| | | | A | B | C | Min. | Standard | Max. | Min. | Standard | Max. | 220V | 230V | 240V |
| Heating operation | 3 room | 20 + 20 + 20 | 2.27 | 2.27 | 2.27 | 1.4 | 6.8 | 7.8 | 270 | 1400 | 2800 | 6.5 | 6.2 | 6.0 |
| | | 20 + 20 + 25 | 2.09 | 2.09 | 2.62 | 1.4 | 6.8 | 7.8 | 270 | 1400 | 2800 | 6.5 | 6.2 | 6.0 |
| | | 20 + 20 + 35 | 1.81 | 1.81 | 3.17 | 1.4 | 6.8 | 7.8 | 270 | 1400 | 2800 | 6.5 | 6.2 | 6.0 |
| | | 20 + 20 + 50 | 1.51 | 1.51 | 3.78 | 1.4 | 6.8 | 7.8 | 270 | 1400 | 2800 | 6.5 | 6.2 | 6.0 |
| | | 20 + 20 + 60 | 1.36 | 1.36 | 4.08 | 1.4 | 6.8 | 7.8 | 270 | 1400 | 2800 | 6.5 | 6.2 | 6.0 |
| | | 20 + 25 + 25 | 1.94 | 2.43 | 2.43 | 1.4 | 6.8 | 7.8 | 270 | 1400 | 2800 | 6.5 | 6.2 | 6.0 |
| | | 20 + 25 + 35 | 1.70 | 2.13 | 2.98 | 1.4 | 6.8 | 7.8 | 270 | 1400 | 2800 | 6.5 | 6.2 | 6.0 |
| | | 20 + 25 + 50 | 1.43 | 1.79 | 3.58 | 1.4 | 6.8 | 7.8 | 270 | 1400 | 2800 | 6.5 | 6.2 | 6.0 |
| | | 20 + 25 + 60 | 1.30 | 1.62 | 3.89 | 1.4 | 6.8 | 7.8 | 270 | 1400 | 2800 | 6.5 | 6.2 | 6.0 |
| | | 20 + 35 + 35 | 1.51 | 2.64 | 2.64 | 1.4 | 6.8 | 7.8 | 270 | 1400 | 2800 | 6.5 | 6.2 | 6.0 |
| | | 20 + 35 + 50 | 1.30 | 2.27 | 3.24 | 1.4 | 6.8 | 7.8 | 270 | 1400 | 2800 | 6.5 | 6.2 | 6.0 |
| | | 25 + 25 + 25 | 2.27 | 2.27 | 2.27 | 1.4 | 6.8 | 7.8 | 270 | 1400 | 2800 | 6.5 | 6.2 | 6.0 |
| | | 25 + 25 + 35 | 2.00 | 2.00 | 2.80 | 1.4 | 6.8 | 7.8 | 270 | 1400 | 2800 | 6.5 | 6.2 | 6.0 |
| | | 25 + 25 + 50 | 1.70 | 1.70 | 3.40 | 1.4 | 6.8 | 7.8 | 270 | 1400 | 2800 | 6.5 | 6.2 | 6.0 |
| | | 25 + 25 + 60 | 1.55 | 1.55 | 3.71 | 1.4 | 6.8 | 7.8 | 270 | 1400 | 2800 | 6.5 | 6.2 | 6.0 |
| | | 25 + 35 + 35 | 1.79 | 2.51 | 2.51 | 1.4 | 6.8 | 7.8 | 270 | 1400 | 2800 | 6.5 | 6.2 | 6.0 |
| | | 25 + 35 + 50 | 1.55 | 2.16 | 3.09 | 1.4 | 6.8 | 7.8 | 270 | 1400 | 2800 | 6.5 | 6.2 | 6.0 |
| | | 35 + 35 + 35 | 2.27 | 2.27 | 2.27 | 1.4 | 6.8 | 7.8 | 270 | 1400 | 2800 | 6.5 | 6.2 | 6.0 |

| Indoor unit combination | | | Cooling capacity (kW) | | | | | | Power consumption(W) | | | Standard current(A) | | |
|---|---|---|---|---|---|---|---|---|---|---|---|---|---|---|
| | | | Room cooling capacity | | | Total capacity | | | | | | | | |
| | | | A | B | C | Min. | Standard | Max. | Min. | Standard | Max. | 220V | 230V | 240V |
| Cooling operation | 1 room | 20 | 2.00 | - | - | 1.7 | 2.0 | 2.8 | 430 | 500 | 950 | 2.4 | 2.3 | 2.2 |
| | | 25 | 2.50 | - | - | 1.7 | 2.5 | 3.4 | 430 | 680 | 1080 | 3.2 | 3.1 | 3.0 |
| | | 35 | 3.50 | - | - | 1.7 | 3.5 | 3.9 | 430 | 1010 | 1240 | 4.7 | 4.5 | 4.3 |
| | | 50 | 5.00 | - | - | 1.7 | 5.0 | 6.1 | 430 | 1530 | 2100 | 7.0 | 6.7 | 6.4 |
| | | 60 | 6.00 | - | - | 1.7 | 6.0 | 6.3 | 430 | 1880 | 2280 | 8.6 | 8.3 | 7.9 |
| | 2 room | 20 + 20 | 2.00 | 2.00 | - | 1.8 | 4.0 | 5.7 | 390 | 750 | 1750 | 3.5 | 3.3 | 3.2 |
| | | 20 + 25 | 2.00 | 2.50 | - | 1.8 | 4.5 | 5.9 | 390 | 990 | 1910 | 4.6 | 4.4 | 4.2 |
| | | 20 + 35 | 2.00 | 3.50 | - | 1.8 | 5.5 | 6.7 | 390 | 1320 | 2200 | 6.1 | 5.8 | 5.6 |
| | | 20 + 50 | 1.71 | 4.29 | - | 1.8 | 6.0 | 6.9 | 390 | 1560 | 2280 | 7.2 | 6.9 | 6.6 |
| | | 20 + 60 | 1.50 | 4.50 | - | 1.8 | 6.0 | 6.9 | 390 | 1560 | 2280 | 7.2 | 6.9 | 6.6 |
| | | 25 + 25 | 2.50 | 2.50 | - | 1.8 | 5.0 | 6.5 | 390 | 1110 | 2150 | 5.1 | 4.9 | 4.7 |
| | | 25 + 35 | 2.50 | 3.50 | - | 1.8 | 6.0 | 6.9 | 390 | 1560 | 2280 | 7.2 | 6.9 | 6.6 |
| | | 25 + 50 | 2.00 | 4.00 | - | 1.8 | 6.0 | 6.9 | 390 | 1560 | 2280 | 7.2 | 6.9 | 6.6 |
| | | 25 + 60 | 1.76 | 4.24 | - | 1.8 | 6.0 | 6.9 | 390 | 1560 | 2280 | 7.2 | 6.9 | 6.6 |
| | | 35 + 35 | 3.00 | 3.00 | - | 1.8 | 6.0 | 6.9 | 390 | 1560 | 2280 | 7.2 | 6.9 | 6.6 |
| | | 35 + 50 | 2.47 | 3.53 | - | 1.8 | 6.0 | 6.9 | 390 | 1560 | 2280 | 7.2 | 6.9 | 6.6 |
| | | 35 + 60 | 2.21 | 3.79 | - | 1.8 | 6.0 | 6.9 | 390 | 1560 | 2280 | 7.2 | 6.9 | 6.6 |
| | | 50 + 50 | 3.00 | 3.00 | - | 1.8 | 6.0 | 6.9 | 390 | 1560 | 2280 | 7.2 | 6.9 | 6.6 |
| | | 50 + 60 | 2.73 | 3.27 | - | 1.8 | 6.0 | 6.9 | 390 | 1560 | 2280 | 7.2 | 6.9 | 6.6 |
| | 3 room | 20 + 20 + 20 | 2.00 | 2.00 | 2.00 | 2.1 | 6.0 | 7.5 | 350 | 1320 | 2280 | 6.1 | 5.8 | 5.6 |
| | | 20 + 20 + 25 | 1.85 | 1.85 | 2.31 | 2.1 | 6.0 | 7.5 | 350 | 1320 | 2280 | 6.1 | 5.8 | 5.6 |
| | | 20 + 20 + 35 | 1.60 | 1.60 | 2.80 | 2.1 | 6.0 | 7.5 | 350 | 1320 | 2280 | 6.1 | 5.8 | 5.6 |
| | | 20 + 20 + 50 | 1.33 | 1.33 | 3.33 | 2.1 | 6.0 | 7.5 | 350 | 1320 | 2280 | 6.1 | 5.8 | 5.6 |
| | | 20 + 20 + 60 | 1.20 | 1.20 | 3.60 | 2.1 | 6.0 | 7.5 | 350 | 1320 | 2280 | 6.1 | 5.8 | 5.6 |
| | | 20 + 25 + 25 | 1.71 | 2.14 | 2.14 | 2.1 | 6.0 | 7.5 | 350 | 1320 | 2280 | 6.1 | 5.8 | 5.6 |
| | | 20 + 25 + 35 | 1.50 | 1.88 | 2.63 | 2.1 | 6.0 | 7.5 | 350 | 1320 | 2280 | 6.1 | 5.8 | 5.6 |
| | | 20 + 25 + 50 | 1.26 | 1.58 | 3.16 | 2.1 | 6.0 | 7.5 | 350 | 1320 | 2280 | 6.1 | 5.8 | 5.6 |
| | | 20 + 25 + 60 | 1.14 | 1.43 | 3.43 | 2.1 | 6.0 | 7.5 | 350 | 1320 | 2280 | 6.1 | 5.8 | 5.6 |
| | | 20 + 35 + 35 | 1.33 | 2.33 | 2.33 | 2.1 | 6.0 | 7.5 | 350 | 1320 | 2280 | 6.1 | 5.8 | 5.6 |
| | | 20 + 35 + 50 | 1.14 | 2.00 | 2.86 | 2.1 | 6.0 | 7.5 | 350 | 1320 | 2280 | 6.1 | 5.8 | 5.6 |
| | | 25 + 25 + 25 | 2.00 | 2.00 | 2.00 | 2.1 | 6.0 | 7.5 | 350 | 1320 | 2280 | 6.1 | 5.8 | 5.6 |
| | | 25 + 25 + 35 | 1.76 | 1.76 | 2.47 | 2.1 | 6.0 | 7.5 | 350 | 1320 | 2280 | 6.1 | 5.8 | 5.6 |
| | | 25 + 25 + 50 | 1.50 | 1.50 | 3.00 | 2.1 | 6.0 | 7.5 | 350 | 1320 | 2280 | 6.1 | 5.8 | 5.6 |
| | | 25 + 25 + 60 | 1.36 | 1.36 | 3.27 | 2.1 | 6.0 | 7.5 | 350 | 1320 | 2280 | 6.1 | 5.8 | 5.6 |
| | | 25 + 35 + 35 | 1.58 | 2.21 | 2.21 | 2.1 | 6.0 | 7.5 | 350 | 1320 | 2280 | 6.1 | 5.8 | 5.6 |
| | | 25 + 35 + 50 | 1.36 | 1.91 | 2.73 | 2.1 | 6.0 | 7.5 | 350 | 1320 | 2280 | 6.1 | 5.8 | 5.6 |
| | | 35 + 35 + 35 | 2.00 | 2.00 | 2.00 | 2.1 | 6.0 | 7.5 | 350 | 1320 | 2280 | 6.1 | 5.8 | 5.6 |

# MULTI-SPLIT SYSTEM

## SCM60ZS-W Table of Indoor unit combination with other indoor unit

| Indoor unit combination | | | Heating capacity (kW) | | | | | | Power consumption(W) | | | Standard current(A) | | |
|---|---|---|---|---|---|---|---|---|---|---|---|---|---|---|
| | | | Room heating capacity | | | Total capacity | | | | | | | | |
| | | | A | B | C | Min. | Standard | Max. | Min. | Standard | Max. | 220V | 230V | 240V |
| Heating operation | 1 room | 20 | 3.00 | - | - | 1.0 | 3.0 | 3.5 | 320 | 970 | 1330 | 4.5 | 4.3 | 4.1 |
| | | 25 | 3.40 | - | - | 1.0 | 3.4 | 4.0 | 320 | 1140 | 1510 | 5.3 | 5.1 | 4.8 |
| | | 35 | 4.50 | - | - | 1.0 | 4.5 | 4.8 | 320 | 1480 | 1790 | 6.9 | 6.6 | 6.3 |
| | | 50 | 5.80 | - | - | 1.0 | 5.8 | 6.1 | 320 | 1910 | 2310 | 8.9 | 8.5 | 8.1 |
| | | 60 | 6.80 | - | - | 1.0 | 6.8 | 7.0 | 320 | 2200 | 2660 | 10.2 | 9.8 | 9.4 |
| | 2 room | 20 + 20 | 2.70 | 2.70 | - | 1.2 | 5.4 | 7.0 | 290 | 1250 | 2100 | 5.8 | 5.5 | 5.3 |
| | | 20 + 25 | 2.62 | 3.28 | - | 1.2 | 5.9 | 7.2 | 290 | 1380 | 2550 | 6.4 | 6.1 | 5.9 |
| | | 20 + 35 | 2.40 | 4.20 | - | 1.2 | 6.6 | 7.3 | 290 | 1560 | 2800 | 7.2 | 6.9 | 6.6 |
| | | 20 + 50 | 1.94 | 4.86 | - | 1.2 | 6.8 | 7.3 | 290 | 1640 | 2800 | 7.6 | 7.3 | 7.0 |
| | | 20 + 60 | 1.70 | 5.10 | - | 1.2 | 6.8 | 7.3 | 290 | 1640 | 2800 | 7.6 | 7.3 | 7.0 |
| | | 25 + 25 | 3.20 | 3.20 | - | 1.2 | 6.4 | 7.3 | 290 | 1510 | 2800 | 7.0 | 6.7 | 6.4 |
| | | 25 + 35 | 2.83 | 3.97 | - | 1.2 | 6.8 | 7.3 | 290 | 1640 | 2800 | 7.6 | 7.3 | 7.0 |
| | | 25 + 50 | 2.27 | 4.53 | - | 1.2 | 6.8 | 7.3 | 290 | 1640 | 2800 | 7.6 | 7.3 | 7.0 |
| | | 25 + 60 | 2.00 | 4.80 | - | 1.2 | 6.8 | 7.3 | 290 | 1640 | 2800 | 7.6 | 7.3 | 7.0 |
| | | 35 + 35 | 3.40 | 3.40 | - | 1.2 | 6.8 | 7.3 | 290 | 1640 | 2800 | 7.6 | 7.3 | 7.0 |
| | | 35 + 50 | 2.80 | 4.00 | - | 1.2 | 6.8 | 7.3 | 290 | 1640 | 2800 | 7.6 | 7.3 | 7.0 |
| | | 35 + 60 | 2.51 | 4.29 | - | 1.2 | 6.8 | 7.3 | 290 | 1640 | 2800 | 7.6 | 7.3 | 7.0 |
| | | 50 + 50 | 3.40 | 3.40 | - | 1.2 | 6.8 | 7.3 | 290 | 1640 | 2800 | 7.6 | 7.3 | 7.0 |
| | | 50 + 60 | 3.09 | 3.71 | - | 1.2 | 6.8 | 7.3 | 290 | 1640 | 2800 | 7.6 | 7.3 | 7.0 |
| | 3 room | 20 + 20 + 20 | 2.27 | 2.27 | 2.27 | 1.4 | 6.8 | 7.6 | 270 | 1500 | 2800 | 7.0 | 6.7 | 6.4 |
| | | 20 + 20 + 25 | 2.09 | 2.09 | 2.62 | 1.4 | 6.8 | 7.6 | 270 | 1500 | 2800 | 7.0 | 6.7 | 6.4 |
| | | 20 + 20 + 35 | 1.81 | 1.81 | 3.17 | 1.4 | 6.8 | 7.6 | 270 | 1500 | 2800 | 7.0 | 6.7 | 6.4 |
| | | 20 + 20 + 50 | 1.51 | 1.51 | 3.78 | 1.4 | 6.8 | 7.6 | 270 | 1500 | 2800 | 7.0 | 6.7 | 6.4 |
| | | 20 + 20 + 60 | 1.36 | 1.36 | 4.08 | 1.4 | 6.8 | 7.6 | 270 | 1500 | 2800 | 7.0 | 6.7 | 6.4 |
| | | 20 + 25 + 25 | 1.94 | 2.43 | 2.43 | 1.4 | 6.8 | 7.6 | 270 | 1500 | 2800 | 7.0 | 6.7 | 6.4 |
| | | 20 + 25 + 35 | 1.70 | 2.13 | 2.98 | 1.4 | 6.8 | 7.6 | 270 | 1500 | 2800 | 7.0 | 6.7 | 6.4 |
| | | 20 + 25 + 50 | 1.43 | 1.79 | 3.58 | 1.4 | 6.8 | 7.6 | 270 | 1500 | 2800 | 7.0 | 6.7 | 6.4 |
| | | 20 + 25 + 60 | 1.30 | 1.62 | 3.89 | 1.4 | 6.8 | 7.6 | 270 | 1500 | 2800 | 7.0 | 6.7 | 6.4 |
| | | 20 + 35 + 35 | 1.51 | 2.64 | 2.64 | 1.4 | 6.8 | 7.6 | 270 | 1500 | 2800 | 7.0 | 6.7 | 6.4 |
| | | 20 + 35 + 50 | 1.30 | 2.27 | 3.24 | 1.4 | 6.8 | 7.6 | 270 | 1500 | 2800 | 7.0 | 6.7 | 6.4 |
| | | 25 + 25 + 25 | 2.27 | 2.27 | 2.27 | 1.4 | 6.8 | 7.6 | 270 | 1500 | 2800 | 7.0 | 6.7 | 6.4 |
| | | 25 + 25 + 35 | 2.00 | 2.00 | 2.80 | 1.4 | 6.8 | 7.6 | 270 | 1500 | 2800 | 7.0 | 6.7 | 6.4 |
| | | 25 + 25 + 50 | 1.70 | 1.70 | 3.40 | 1.4 | 6.8 | 7.6 | 270 | 1500 | 2800 | 7.0 | 6.7 | 6.4 |
| | | 25 + 25 + 60 | 1.55 | 1.55 | 3.71 | 1.4 | 6.8 | 7.6 | 270 | 1500 | 2800 | 7.0 | 6.7 | 6.4 |
| | | 25 + 35 + 35 | 1.79 | 2.51 | 2.51 | 1.4 | 6.8 | 7.6 | 270 | 1500 | 2800 | 7.0 | 6.7 | 6.4 |
| | | 25 + 35 + 50 | 1.55 | 2.16 | 3.09 | 1.4 | 6.8 | 7.6 | 270 | 1500 | 2800 | 7.0 | 6.7 | 6.4 |
| | | 35 + 35 + 35 | 2.27 | 2.27 | 2.27 | 1.4 | 6.8 | 7.6 | 270 | 1500 | 2800 | 7.0 | 6.7 | 6.4 |

| Indoor unit combination | | | Cooling capacity (kW) | | | | | | Power consumption(W) | | | Standard current(A) | | |
|---|---|---|---|---|---|---|---|---|---|---|---|---|---|---|
| | | | Room cooling capacity | | | Total capacity | | | | | | | | |
| | | | A | B | C | Min. | Standard | Max. | Min. | Standard | Max. | 220V | 230V | 240V |
| Cooling operation | 1 room | 20 | 2.00 | - | - | 1.7 | 2.0 | 2.7 | 430 | 570 | 950 | 2.7 | 2.6 | 2.5 |
| | | 25 | 2.50 | - | - | 1.7 | 2.5 | 3.2 | 430 | 760 | 1080 | 3.6 | 3.4 | 3.3 |
| | | 35 | 3.50 | - | - | 1.7 | 3.5 | 3.7 | 430 | 1150 | 1240 | 5.3 | 5.1 | 4.9 |
| | | 50 | 5.00 | - | - | 1.7 | 5.0 | 5.8 | 430 | 1860 | 2100 | 8.5 | 8.2 | 7.8 |
| | | 60 | 6.00 | - | - | 1.7 | 6.0 | 6.1 | 430 | 2140 | 2280 | 9.8 | 9.4 | 9.0 |
| | 2 room | 20 + 20 | 2.00 | 2.00 | - | 1.8 | 4.0 | 5.6 | 390 | 800 | 1750 | 3.7 | 3.5 | 3.4 |
| | | 20 + 25 | 2.00 | 2.50 | - | 1.8 | 4.5 | 5.8 | 390 | 1050 | 1910 | 4.8 | 4.6 | 4.4 |
| | | 20 + 35 | 2.00 | 3.50 | - | 1.8 | 5.5 | 6.1 | 390 | 1620 | 2110 | 7.4 | 7.1 | 6.8 |
| | | 20 + 50 | 1.71 | 4.29 | - | 1.8 | 6.0 | 6.7 | 390 | 1930 | 2280 | 8.9 | 8.5 | 8.1 |
| | | 20 + 60 | 1.50 | 4.50 | - | 1.8 | 6.0 | 6.7 | 390 | 1930 | 2280 | 8.9 | 8.5 | 8.1 |
| | | 25 + 25 | 2.50 | 2.50 | - | 1.8 | 5.0 | 6.1 | 390 | 1340 | 2110 | 6.2 | 5.9 | 5.6 |
| | | 25 + 35 | 2.50 | 3.50 | - | 1.8 | 6.0 | 6.7 | 390 | 1930 | 2280 | 8.9 | 8.5 | 8.1 |
| | | 25 + 50 | 2.00 | 4.00 | - | 1.8 | 6.0 | 6.7 | 390 | 1930 | 2280 | 8.9 | 8.5 | 8.1 |
| | | 25 + 60 | 1.76 | 4.24 | - | 1.8 | 6.0 | 6.7 | 390 | 1930 | 2280 | 8.9 | 8.5 | 8.1 |
| | | 35 + 35 | 3.00 | 3.00 | - | 1.8 | 6.0 | 6.7 | 390 | 1930 | 2280 | 8.9 | 8.5 | 8.1 |
| | | 35 + 50 | 2.47 | 3.53 | - | 1.8 | 6.0 | 6.7 | 390 | 1930 | 2280 | 8.9 | 8.5 | 8.1 |
| | | 35 + 60 | 2.21 | 3.79 | - | 1.8 | 6.0 | 6.7 | 390 | 1930 | 2280 | 8.9 | 8.5 | 8.1 |
| | | 50 + 50 | 3.00 | 3.00 | - | 1.8 | 6.0 | 6.7 | 390 | 1930 | 2280 | 8.9 | 8.5 | 8.1 |
| | | 50 + 60 | 2.73 | 3.27 | - | 1.8 | 6.0 | 6.7 | 390 | 1930 | 2280 | 8.9 | 8.5 | 8.1 |
| | 3 room | 20 + 20 + 20 | 2.00 | 2.00 | 2.00 | 2.1 | 6.0 | 7.3 | 350 | 1430 | 2280 | 6.6 | 6.3 | 6.0 |
| | | 20 + 20 + 25 | 1.85 | 1.85 | 2.31 | 2.1 | 6.0 | 7.3 | 350 | 1430 | 2280 | 6.6 | 6.3 | 6.0 |
| | | 20 + 20 + 35 | 1.60 | 1.60 | 2.80 | 2.1 | 6.0 | 7.3 | 350 | 1430 | 2280 | 6.6 | 6.3 | 6.0 |
| | | 20 + 20 + 50 | 1.33 | 1.33 | 3.33 | 2.1 | 6.0 | 7.3 | 350 | 1430 | 2280 | 6.6 | 6.3 | 6.0 |
| | | 20 + 20 + 60 | 1.20 | 1.20 | 3.60 | 2.1 | 6.0 | 7.3 | 350 | 1430 | 2280 | 6.6 | 6.3 | 6.0 |
| | | 20 + 25 + 25 | 1.71 | 2.14 | 2.14 | 2.1 | 6.0 | 7.3 | 350 | 1430 | 2280 | 6.6 | 6.3 | 6.0 |
| | | 20 + 25 + 35 | 1.50 | 1.88 | 2.63 | 2.1 | 6.0 | 7.3 | 350 | 1430 | 2280 | 6.6 | 6.3 | 6.0 |
| | | 20 + 25 + 50 | 1.26 | 1.58 | 3.16 | 2.1 | 6.0 | 7.3 | 350 | 1430 | 2280 | 6.6 | 6.3 | 6.0 |
| | | 20 + 25 + 60 | 1.14 | 1.43 | 3.43 | 2.1 | 6.0 | 7.3 | 350 | 1430 | 2280 | 6.6 | 6.3 | 6.0 |
| | | 20 + 35 + 35 | 1.33 | 2.33 | 2.33 | 2.1 | 6.0 | 7.3 | 350 | 1430 | 2280 | 6.6 | 6.3 | 6.0 |
| | | 20 + 35 + 50 | 1.14 | 2.00 | 2.86 | 2.1 | 6.0 | 7.3 | 350 | 1430 | 2280 | 6.6 | 6.3 | 6.0 |
| | | 25 + 25 + 25 | 2.00 | 2.00 | 2.00 | 2.1 | 6.0 | 7.3 | 350 | 1430 | 2280 | 6.6 | 6.3 | 6.0 |
| | | 25 + 25 + 35 | 1.76 | 1.76 | 2.47 | 2.1 | 6.0 | 7.3 | 350 | 1430 | 2280 | 6.6 | 6.3 | 6.0 |

| Indoor unit combination | | | Cooling capacity (kW) | | | | | | Power consumption(W) | | | Standard current(A) | | |
|---|---|---|---|---|---|---|---|---|---|---|---|---|---|---|
| | | | Room cooling capacity | | | Total capacity | | | | | | | | |
| | | | A | B | C | Min. | Standard | Max. | Min. | Standard | Max. | 220V | 230V | 240V |
| Cooling operation | 3 room | 25 + 25 + 50 | 1.50 | 1.50 | 3.00 | 2.1 | 6.0 | 7.3 | 350 | 1430 | 2280 | 6.6 | 6.3 | 6.0 |
| | | 25 + 25 + 60 | 1.36 | 1.36 | 3.27 | 2.1 | 6.0 | 7.3 | 350 | 1430 | 2280 | 6.6 | 6.3 | 6.0 |
| | | 25 + 35 + 35 | 1.58 | 2.21 | 2.21 | 2.1 | 6.0 | 7.3 | 350 | 1430 | 2280 | 6.6 | 6.3 | 6.0 |
| | | 25 + 35 + 50 | 1.36 | 1.91 | 2.73 | 2.1 | 6.0 | 7.3 | 350 | 1430 | 2280 | 6.6 | 6.3 | 6.0 |
| | | 35 + 35 + 35 | 2.00 | 2.00 | 2.00 | 2.1 | 6.0 | 7.3 | 350 | 1430 | 2280 | 6.6 | 6.3 | 6.0 |

## SCM71ZS-W Table of Indoor unit combination only with SRK-ZSX type

| Indoor unit combination | | | Heating capacity (kW) | | | | | | | Power consumption(W) | | | Standard current(A) | | |
|---|---|---|---|---|---|---|---|---|---|---|---|---|---|---|---|
| | | | Room heating capacity | | | | Total capacity | | | | | | | | |
| | | | A | B | C | D | Min. | Standard | Max. | Min. | Standard | Max. | 220V | 230V | 240V |
| Heating operation | 1 room | 20 | 3.00 | - | - | - | 1.1 | 3.0 | 3.7 | 390 | 840 | 1330 | 4.0 | 3.8 | 3.6 |
| | | 25 | 3.40 | - | - | - | 1.1 | 3.4 | 4.2 | 390 | 1000 | 1510 | 4.7 | 4.5 | 4.3 |
| | | 35 | 4.50 | - | - | - | 1.1 | 4.5 | 5.0 | 390 | 1330 | 1790 | 6.2 | 5.9 | 5.7 |
| | | 50 | 5.80 | - | - | - | 1.1 | 5.8 | 6.5 | 390 | 1780 | 2310 | 8.3 | 7.9 | 7.6 |
| | | 60 | 6.80 | - | - | - | 1.1 | 6.8 | 7.5 | 390 | 2100 | 2660 | 9.7 | 9.3 | 8.9 |
| | 2 room | 20 + 20 | 2.70 | 2.70 | - | - | 1.5 | 5.4 | 7.4 | 350 | 1280 | 1870 | 6.0 | 5.7 | 5.5 |
| | | 20 + 25 | 2.62 | 3.28 | - | - | 1.5 | 5.9 | 7.7 | 350 | 1410 | 2130 | 6.6 | 6.3 | 6.0 |
| | | 20 + 35 | 2.51 | 4.39 | - | - | 1.5 | 6.9 | 8.3 | 350 | 1680 | 2650 | 7.8 | 7.5 | 7.1 |
| | | 20 + 50 | 2.46 | 6.14 | - | - | 1.5 | 8.6 | 8.9 | 350 | 2100 | 3000 | 9.7 | 9.3 | 8.9 |
| | | 20 + 60 | 2.15 | 6.45 | - | - | 1.5 | 8.6 | 8.9 | 350 | 2100 | 3000 | 9.7 | 9.3 | 8.9 |
| | | 25 + 25 | 3.20 | 3.20 | - | - | 1.5 | 6.4 | 8.1 | 350 | 1540 | 2480 | 7.1 | 6.8 | 6.5 |
| | | 25 + 35 | 3.08 | 4.32 | - | - | 1.5 | 7.4 | 8.6 | 350 | 1810 | 2910 | 8.4 | 8.0 | 7.7 |
| | | 25 + 50 | 2.87 | 5.73 | - | - | 1.5 | 8.6 | 8.9 | 350 | 2100 | 3000 | 9.7 | 9.3 | 8.9 |
| | | 25 + 60 | 2.53 | 6.07 | - | - | 1.5 | 8.6 | 8.9 | 350 | 2100 | 3000 | 9.7 | 9.3 | 8.9 |
| | | 35 + 35 | 4.30 | 4.30 | - | - | 1.5 | 8.6 | 8.9 | 350 | 2100 | 3000 | 9.7 | 9.3 | 8.9 |
| | | 35 + 50 | 3.54 | 5.06 | - | - | 1.5 | 8.6 | 8.9 | 350 | 2100 | 3000 | 9.7 | 9.3 | 8.9 |
| | | 35 + 60 | 3.17 | 5.43 | - | - | 1.5 | 8.6 | 8.9 | 350 | 2100 | 3000 | 9.7 | 9.3 | 8.9 |
| | | 50 + 50 | 4.30 | 4.30 | - | - | 1.5 | 8.6 | 8.9 | 350 | 2100 | 3000 | 9.7 | 9.3 | 8.9 |
| | | 50 + 60 | 3.91 | 4.69 | - | - | 1.5 | 8.6 | 8.9 | 350 | 2100 | 3000 | 9.7 | 9.3 | 8.9 |
| | | 60 + 60 | 4.30 | 4.30 | - | - | 1.5 | 8.6 | 8.9 | 350 | 2100 | 3000 | 9.7 | 9.3 | 8.9 |
| | 3 room | 20 + 20 + 20 | 2.57 | 2.57 | 2.57 | - | 1.6 | 7.7 | 9.1 | 370 | 1830 | 3000 | 8.5 | 8.1 | 7.8 |
| | | 20 + 20 + 25 | 2.46 | 2.46 | 3.08 | - | 1.6 | 8.0 | 9.1 | 370 | 1930 | 3000 | 9.0 | 8.6 | 8.2 |
| | | 20 + 20 + 35 | 2.29 | 2.29 | 4.01 | - | 1.6 | 8.6 | 9.1 | 370 | 2060 | 3000 | 9.6 | 9.1 | 8.8 |
| | | 20 + 20 + 50 | 1.91 | 1.91 | 4.78 | - | 1.6 | 8.6 | 9.1 | 370 | 2060 | 3000 | 9.6 | 9.1 | 8.8 |
| | | 20 + 20 + 60 | 1.72 | 1.72 | 5.16 | - | 1.6 | 8.6 | 9.1 | 370 | 2060 | 3000 | 9.6 | 9.1 | 8.8 |
| | | 20 + 25 + 25 | 2.46 | 3.07 | 3.07 | - | 1.6 | 8.6 | 9.1 | 370 | 2060 | 3000 | 9.6 | 9.1 | 8.8 |
| | | 20 + 25 + 35 | 2.15 | 2.69 | 3.76 | - | 1.6 | 8.6 | 9.1 | 370 | 2060 | 3000 | 9.6 | 9.1 | 8.8 |
| | | 20 + 25 + 50 | 1.81 | 2.26 | 4.53 | - | 1.6 | 8.6 | 9.1 | 370 | 2060 | 3000 | 9.6 | 9.1 | 8.8 |
| | | 20 + 25 + 60 | 1.64 | 2.05 | 4.91 | - | 1.6 | 8.6 | 9.1 | 370 | 2060 | 3000 | 9.6 | 9.1 | 8.8 |
| | | 20 + 35 + 35 | 1.91 | 3.34 | 3.34 | - | 1.6 | 8.6 | 9.1 | 370 | 2060 | 3000 | 9.6 | 9.1 | 8.8 |
| | | 20 + 35 + 50 | 1.64 | 2.87 | 4.10 | - | 1.6 | 8.6 | 9.1 | 370 | 2060 | 3000 | 9.6 | 9.1 | 8.8 |
| | | 20 + 35 + 60 | 1.50 | 2.62 | 4.49 | - | 1.6 | 8.6 | 9.1 | 370 | 2060 | 3000 | 9.6 | 9.1 | 8.8 |
| | | 20 + 50 + 50 | 1.43 | 3.58 | 3.58 | - | 1.6 | 8.6 | 9.1 | 370 | 2060 | 3000 | 9.6 | 9.1 | 8.8 |
| | | 25 + 25 + 25 | 2.87 | 2.87 | 2.87 | - | 1.6 | 8.6 | 9.1 | 370 | 2060 | 3000 | 9.6 | 9.1 | 8.8 |
| | | 25 + 25 + 35 | 2.53 | 2.53 | 3.54 | - | 1.6 | 8.6 | 9.1 | 370 | 2060 | 3000 | 9.6 | 9.1 | 8.8 |
| | | 25 + 25 + 50 | 2.15 | 2.15 | 4.30 | - | 1.6 | 8.6 | 9.1 | 370 | 2060 | 3000 | 9.6 | 9.1 | 8.8 |
| | | 25 + 25 + 60 | 1.95 | 1.95 | 4.69 | - | 1.6 | 8.6 | 9.1 | 370 | 2060 | 3000 | 9.6 | 9.1 | 8.8 |
| | | 25 + 35 + 35 | 2.26 | 3.17 | 3.17 | - | 1.6 | 8.6 | 9.1 | 370 | 2060 | 3000 | 9.6 | 9.1 | 8.8 |
| | | 25 + 35 + 50 | 1.95 | 2.74 | 3.91 | - | 1.6 | 8.6 | 9.1 | 370 | 2060 | 3000 | 9.6 | 9.1 | 8.8 |
| | | 25 + 35 + 60 | 1.79 | 2.51 | 4.30 | - | 1.6 | 8.6 | 9.1 | 370 | 2060 | 3000 | 9.6 | 9.1 | 8.8 |
| | | 25 + 50 + 50 | 1.72 | 3.44 | 3.44 | - | 1.6 | 8.6 | 9.1 | 370 | 2060 | 3000 | 9.6 | 9.1 | 8.8 |
| | | 35 + 35 + 35 | 2.87 | 2.87 | 2.87 | - | 1.6 | 8.6 | 9.1 | 370 | 2060 | 3000 | 9.6 | 9.1 | 8.8 |
| | | 35 + 35 + 50 | 2.51 | 2.51 | 3.58 | - | 1.6 | 8.6 | 9.1 | 370 | 2060 | 3000 | 9.6 | 9.1 | 8.8 |
| | 4 room | 20 + 20 + 20 + 20 | 2.15 | 2.15 | 2.15 | 2.15 | 1.7 | 8.6 | 9.4 | 350 | 1750 | 3000 | 8.1 | 7.8 | 7.4 |
| | | 20 + 20 + 20 + 25 | 2.02 | 2.02 | 2.02 | 2.53 | 1.7 | 8.6 | 9.4 | 350 | 1750 | 3000 | 8.1 | 7.8 | 7.4 |
| | | 20 + 20 + 20 + 35 | 1.81 | 1.81 | 1.81 | 3.17 | 1.7 | 8.6 | 9.4 | 350 | 1750 | 3000 | 8.1 | 7.8 | 7.4 |
| | | 20 + 20 + 20 + 50 | 1.56 | 1.56 | 1.56 | 3.91 | 1.7 | 8.6 | 9.4 | 350 | 1750 | 3000 | 8.1 | 7.8 | 7.4 |
| | | 20 + 20 + 20 + 60 | 1.43 | 1.43 | 1.43 | 4.30 | 1.7 | 8.6 | 9.4 | 350 | 1750 | 3000 | 8.1 | 7.8 | 7.4 |
| | | 20 + 20 + 25 + 25 | 1.91 | 1.91 | 2.39 | 2.39 | 1.7 | 8.6 | 9.4 | 350 | 1750 | 3000 | 8.1 | 7.8 | 7.4 |
| | | 20 + 20 + 25 + 35 | 1.72 | 1.72 | 2.15 | 3.01 | 1.7 | 8.6 | 9.4 | 350 | 1750 | 3000 | 8.1 | 7.8 | 7.4 |
| | | 20 + 20 + 25 + 50 | 1.50 | 1.50 | 1.87 | 3.74 | 1.7 | 8.6 | 9.4 | 350 | 1750 | 3000 | 8.1 | 7.8 | 7.4 |
| | | 20 + 20 + 25 + 60 | 1.38 | 1.38 | 1.72 | 4.13 | 1.7 | 8.6 | 9.4 | 350 | 1750 | 3000 | 8.1 | 7.8 | 7.4 |
| | | 20 + 20 + 35 + 35 | 1.56 | 1.56 | 2.74 | 2.74 | 1.7 | 8.6 | 9.4 | 350 | 1750 | 3000 | 8.1 | 7.8 | 7.4 |
| | | 20 + 20 + 35 + 50 | 1.38 | 1.38 | 2.41 | 3.44 | 1.7 | 8.6 | 9.4 | 350 | 1750 | 3000 | 8.1 | 7.8 | 7.4 |
| | | 20 + 25 + 25 + 25 | 1.81 | 2.26 | 2.26 | 2.26 | 1.7 | 8.6 | 9.4 | 350 | 1750 | 3000 | 8.1 | 7.8 | 7.4 |
| | | 20 + 25 + 25 + 35 | 1.64 | 2.05 | 2.05 | 2.87 | 1.7 | 8.6 | 9.4 | 350 | 1750 | 3000 | 8.1 | 7.8 | 7.4 |
| | | 20 + 25 + 25 + 50 | 1.43 | 1.79 | 1.79 | 3.58 | 1.7 | 8.6 | 9.4 | 350 | 1750 | 3000 | 8.1 | 7.8 | 7.4 |
| | | 20 + 25 + 35 + 35 | 1.50 | 1.87 | 2.62 | 2.62 | 1.7 | 8.6 | 9.4 | 350 | 1750 | 3000 | 8.1 | 7.8 | 7.4 |
| | | 20 + 35 + 35 + 35 | 1.38 | 2.41 | 2.41 | 2.41 | 1.7 | 8.6 | 9.4 | 350 | 1750 | 3000 | 8.1 | 7.8 | 7.4 |
| | | 25 + 25 + 25 + 25 | 2.15 | 2.15 | 2.15 | 2.15 | 1.7 | 8.6 | 9.4 | 350 | 1750 | 3000 | 8.1 | 7.8 | 7.4 |
| | | 25 + 25 + 25 + 35 | 1.95 | 1.95 | 1.95 | 2.74 | 1.7 | 8.6 | 9.4 | 350 | 1750 | 3000 | 8.1 | 7.8 | 7.4 |
| | | 25 + 25 + 25 + 50 | 1.72 | 1.72 | 1.72 | 3.44 | 1.7 | 8.6 | 9.4 | 350 | 1750 | 3000 | 8.1 | 7.8 | 7.4 |
| | | 25 + 25 + 35 + 35 | 1.79 | 1.79 | 2.51 | 2.51 | 1.7 | 8.6 | 9.4 | 350 | 1750 | 3000 | 8.1 | 7.8 | 7.4 |

# MULTI-SPLIT SYSTEM

| Indoor unit combination | | | Cooling capacity (kW) | | | | | | | Power consumption(W) | | | Standard current(A) | | |
|---|---|---|---|---|---|---|---|---|---|---|---|---|---|---|---|
| | | | Room cooling capacity | | | | Total capacity | | | | | | | | |
| | | | A | B | C | D | Min. | Standard | Max. | Min. | Standard | Max. | 220V | 230V | 240V |
| Cooling operation | 1 room | 20 | 2.00 | - | - | - | 1.8 | 2.0 | 3.4 | 480 | 500 | 950 | 2.4 | 2.3 | 2.2 |
| | | 25 | 2.50 | - | - | - | 1.8 | 2.5 | 3.8 | 480 | 680 | 1080 | 3.2 | 3.1 | 3.0 |
| | | 35 | 3.50 | - | - | - | 1.8 | 3.5 | 4.5 | 480 | 1010 | 1240 | 4.7 | 4.5 | 4.3 |
| | | 50 | 5.00 | - | - | - | 1.8 | 5.0 | 6.2 | 480 | 1530 | 2100 | 7.0 | 6.7 | 6.4 |
| | | 60 | 6.00 | - | - | - | 1.8 | 6.0 | 6.9 | 480 | 1880 | 2700 | 8.6 | 8.3 | 7.9 |
| | 2 room | 20 + 20 | 2.00 | 2.00 | - | - | 3.0 | 4.0 | 6.1 | 550 | 840 | 1910 | 4.0 | 3.8 | 3.6 |
| | | 20 + 25 | 2.00 | 2.50 | - | - | 3.0 | 4.5 | 6.4 | 550 | 990 | 2060 | 4.6 | 4.4 | 4.3 |
| | | 20 + 35 | 2.00 | 3.50 | - | - | 3.0 | 5.5 | 6.9 | 550 | 1320 | 2320 | 6.1 | 5.8 | 5.6 |
| | | 20 + 50 | 2.03 | 5.07 | - | - | 3.0 | 7.1 | 7.7 | 550 | 1970 | 2750 | 9.0 | 8.7 | 8.3 |
| | | 20 + 60 | 1.78 | 5.33 | - | - | 3.0 | 7.1 | 7.7 | 550 | 1970 | 2750 | 9.0 | 8.7 | 8.3 |
| | | 25 + 25 | 2.50 | 2.50 | - | - | 3.0 | 5.0 | 6.8 | 550 | 1150 | 2270 | 5.4 | 5.1 | 4.9 |
| | | 25 + 35 | 2.46 | 3.44 | - | - | 3.0 | 5.9 | 7.2 | 550 | 1470 | 2470 | 6.8 | 6.5 | 6.2 |
| | | 25 + 50 | 2.37 | 4.73 | - | - | 3.0 | 7.1 | 7.7 | 550 | 1970 | 2750 | 9.0 | 8.7 | 8.3 |
| | | 25 + 60 | 2.09 | 5.01 | - | - | 3.0 | 7.1 | 7.7 | 550 | 1970 | 2750 | 9.0 | 8.7 | 8.3 |
| | | 35 + 35 | 3.55 | 3.55 | - | - | 3.0 | 7.1 | 7.7 | 550 | 1970 | 2750 | 9.0 | 8.7 | 8.3 |
| | | 35 + 50 | 2.92 | 4.18 | - | - | 3.0 | 7.1 | 7.7 | 550 | 1970 | 2750 | 9.0 | 8.7 | 8.3 |
| | | 35 + 60 | 2.62 | 4.48 | - | - | 3.0 | 7.1 | 7.7 | 550 | 1970 | 2750 | 9.0 | 8.7 | 8.3 |
| | | 50 + 50 | 3.55 | 3.55 | - | - | 3.0 | 7.1 | 7.7 | 550 | 1970 | 2750 | 9.0 | 8.7 | 8.3 |
| | | 50 + 60 | 3.23 | 3.87 | - | - | 3.0 | 7.1 | 7.7 | 550 | 1970 | 2750 | 9.0 | 8.7 | 8.3 |
| | | 60 + 60 | 3.55 | 3.55 | - | - | 3.0 | 7.1 | 7.7 | 550 | 1970 | 2750 | 9.0 | 8.7 | 8.3 |
| | 3 room | 20 + 20 + 20 | 2.00 | 2.00 | 2.00 | - | 3.7 | 6.0 | 8.2 | 670 | 1240 | 2750 | 5.8 | 5.5 | 5.3 |
| | | 20 + 20 + 25 | 2.00 | 2.00 | 2.50 | - | 3.7 | 6.5 | 8.2 | 670 | 1390 | 2750 | 6.4 | 6.1 | 5.9 |
| | | 20 + 20 + 35 | 1.89 | 1.89 | 3.31 | - | 3.7 | 7.1 | 8.2 | 670 | 1520 | 2750 | 7.0 | 6.7 | 6.4 |
| | | 20 + 20 + 50 | 1.58 | 1.58 | 3.94 | - | 3.7 | 7.1 | 8.2 | 670 | 1520 | 2750 | 7.0 | 6.7 | 6.4 |
| | | 20 + 20 + 60 | 1.42 | 1.42 | 4.26 | - | 3.7 | 7.1 | 8.2 | 670 | 1520 | 2750 | 7.0 | 6.7 | 6.4 |
| | | 20 + 25 + 25 | 2.03 | 2.54 | 2.54 | - | 3.7 | 7.1 | 8.2 | 670 | 1520 | 2750 | 7.0 | 6.7 | 6.4 |
| | | 20 + 25 + 35 | 1.78 | 2.22 | 3.11 | - | 3.7 | 7.1 | 8.2 | 670 | 1520 | 2750 | 7.0 | 6.7 | 6.4 |
| | | 20 + 25 + 50 | 1.49 | 1.87 | 3.74 | - | 3.7 | 7.1 | 8.2 | 670 | 1520 | 2750 | 7.0 | 6.7 | 6.4 |
| | | 20 + 25 + 60 | 1.35 | 1.69 | 4.06 | - | 3.7 | 7.1 | 8.2 | 670 | 1520 | 2750 | 7.0 | 6.7 | 6.4 |
| | | 20 + 35 + 35 | 1.58 | 2.76 | 2.76 | - | 3.7 | 7.1 | 8.2 | 670 | 1520 | 2750 | 7.0 | 6.7 | 6.4 |
| | | 20 + 35 + 50 | 1.35 | 2.37 | 3.38 | - | 3.7 | 7.1 | 8.2 | 670 | 1520 | 2750 | 7.0 | 6.7 | 6.4 |
| | | 20 + 35 + 60 | 1.23 | 2.16 | 3.70 | - | 3.7 | 7.1 | 8.2 | 670 | 1520 | 2750 | 7.0 | 6.7 | 6.4 |
| | | 20 + 50 + 50 | 1.18 | 2.96 | 2.96 | - | 3.7 | 7.1 | 8.2 | 670 | 1520 | 2750 | 7.0 | 6.7 | 6.4 |
| | | 25 + 25 + 25 | 2.37 | 2.37 | 2.37 | - | 3.7 | 7.1 | 8.2 | 670 | 1520 | 2750 | 7.0 | 6.7 | 6.4 |
| | | 25 + 25 + 35 | 2.09 | 2.09 | 2.92 | - | 3.7 | 7.1 | 8.2 | 670 | 1520 | 2750 | 7.0 | 6.7 | 6.4 |
| | | 25 + 25 + 50 | 1.78 | 1.78 | 3.55 | - | 3.7 | 7.1 | 8.2 | 670 | 1520 | 2750 | 7.0 | 6.7 | 6.4 |
| | | 25 + 25 + 60 | 1.61 | 1.61 | 3.87 | - | 3.7 | 7.1 | 8.2 | 670 | 1520 | 2750 | 7.0 | 6.7 | 6.4 |
| | | 25 + 35 + 35 | 1.87 | 2.62 | 2.62 | - | 3.7 | 7.1 | 8.2 | 670 | 1520 | 2750 | 7.0 | 6.7 | 6.4 |
| | | 25 + 35 + 50 | 1.61 | 2.26 | 3.23 | - | 3.7 | 7.1 | 8.2 | 670 | 1520 | 2750 | 7.0 | 6.7 | 6.4 |
| | | 25 + 35 + 60 | 1.48 | 2.07 | 3.55 | - | 3.7 | 7.1 | 8.2 | 670 | 1520 | 2750 | 7.0 | 6.7 | 6.4 |
| | | 25 + 50 + 50 | 1.42 | 2.84 | 2.84 | - | 3.7 | 7.1 | 8.2 | 670 | 1520 | 2750 | 7.0 | 6.7 | 6.4 |
| | | 35 + 35 + 35 | 2.37 | 2.37 | 2.37 | - | 3.7 | 7.1 | 8.2 | 670 | 1520 | 2750 | 7.0 | 6.7 | 6.4 |
| | | 35 + 35 + 50 | 2.07 | 2.07 | 2.96 | - | 3.7 | 7.1 | 8.2 | 670 | 1520 | 2750 | 7.0 | 6.7 | 6.4 |
| | 4 room | 20 + 20 + 20 + 20 | 1.78 | 1.78 | 1.78 | 1.78 | 4.4 | 7.1 | 8.8 | 890 | 1420 | 2750 | 6.5 | 6.2 | 6.0 |
| | | 20 + 20 + 20 + 25 | 1.67 | 1.67 | 1.67 | 2.09 | 4.4 | 7.1 | 8.8 | 890 | 1420 | 2750 | 6.5 | 6.2 | 6.0 |
| | | 20 + 20 + 20 + 35 | 1.49 | 1.49 | 1.49 | 2.62 | 4.4 | 7.1 | 8.8 | 890 | 1420 | 2750 | 6.5 | 6.2 | 6.0 |
| | | 20 + 20 + 20 + 50 | 1.29 | 1.29 | 1.29 | 3.23 | 4.4 | 7.1 | 8.8 | 890 | 1420 | 2750 | 6.5 | 6.2 | 6.0 |
| | | 20 + 20 + 20 + 60 | 1.18 | 1.18 | 1.18 | 3.55 | 4.4 | 7.1 | 8.8 | 890 | 1420 | 2750 | 6.5 | 6.2 | 6.0 |
| | | 20 + 20 + 25 + 25 | 1.58 | 1.58 | 1.97 | 1.97 | 4.4 | 7.1 | 8.8 | 890 | 1420 | 2750 | 6.5 | 6.2 | 6.0 |
| | | 20 + 20 + 25 + 35 | 1.42 | 1.42 | 1.78 | 2.49 | 4.4 | 7.1 | 8.8 | 890 | 1420 | 2750 | 6.5 | 6.2 | 6.0 |
| | | 20 + 20 + 25 + 50 | 1.23 | 1.23 | 1.54 | 3.09 | 4.4 | 7.1 | 8.8 | 890 | 1420 | 2750 | 6.5 | 6.2 | 6.0 |
| | | 20 + 20 + 25 + 60 | 1.14 | 1.14 | 1.42 | 3.41 | 4.4 | 7.1 | 8.8 | 890 | 1420 | 2750 | 6.5 | 6.2 | 6.0 |
| | | 20 + 20 + 35 + 35 | 1.29 | 1.29 | 2.26 | 2.26 | 4.4 | 7.1 | 8.8 | 890 | 1420 | 2750 | 6.5 | 6.2 | 6.0 |
| | | 20 + 20 + 35 + 50 | 1.14 | 1.14 | 1.99 | 2.84 | 4.4 | 7.1 | 8.8 | 890 | 1420 | 2750 | 6.5 | 6.2 | 6.0 |
| | | 20 + 25 + 25 + 25 | 1.49 | 1.87 | 1.87 | 1.87 | 4.4 | 7.1 | 8.8 | 890 | 1420 | 2750 | 6.5 | 6.2 | 6.0 |
| | | 20 + 25 + 25 + 35 | 1.35 | 1.69 | 1.69 | 2.37 | 4.4 | 7.1 | 8.8 | 890 | 1420 | 2750 | 6.5 | 6.2 | 6.0 |
| | | 20 + 25 + 25 + 50 | 1.18 | 1.48 | 1.48 | 2.96 | 4.4 | 7.1 | 8.8 | 890 | 1420 | 2750 | 6.5 | 6.2 | 6.0 |
| | | 20 + 25 + 35 + 35 | 1.23 | 1.54 | 2.16 | 2.16 | 4.4 | 7.1 | 8.8 | 890 | 1420 | 2750 | 6.5 | 6.2 | 6.0 |
| | | 20 + 35 + 35 + 35 | 1.14 | 1.99 | 1.99 | 1.99 | 4.4 | 7.1 | 8.8 | 890 | 1420 | 2750 | 6.5 | 6.2 | 6.0 |
| | | 25 + 25 + 25 + 25 | 1.78 | 1.78 | 1.78 | 1.78 | 4.4 | 7.1 | 8.8 | 890 | 1420 | 2750 | 6.5 | 6.2 | 6.0 |
| | | 25 + 25 + 25 + 35 | 1.61 | 1.61 | 1.61 | 2.26 | 4.4 | 7.1 | 8.8 | 890 | 1420 | 2750 | 6.5 | 6.2 | 6.0 |
| | | 25 + 25 + 25 + 50 | 1.42 | 1.42 | 1.42 | 2.84 | 4.4 | 7.1 | 8.8 | 890 | 1420 | 2750 | 6.5 | 6.2 | 6.0 |
| | | 25 + 25 + 35 + 35 | 1.48 | 1.48 | 2.07 | 2.07 | 4.4 | 7.1 | 8.8 | 890 | 1420 | 2750 | 6.5 | 6.2 | 6.0 |

## SCM71ZS-W Table of Indoor unit combination with other indoor unit

| Indoor unit combination | | | Heating capacity (kW) | | | | | | | Power consumption(W) | | | Standard current(A) | | |
|---|---|---|---|---|---|---|---|---|---|---|---|---|---|---|---|
| | | | Room heating capacity | | | | Total capacity | | | | | | | | |
| | | | A | B | C | D | Min. | Standard | Max. | Min. | Standard | Max. | 220V | 230V | 240V |
| Heating operation | 1 room | 20 | 3.00 | - | - | - | 1.1 | 3.0 | 3.5 | 390 | 1060 | 1330 | 5.0 | 4.8 | 4.6 |
| | | 25 | 3.40 | - | - | - | 1.1 | 3.4 | 4.0 | 390 | 1220 | 1510 | 5.7 | 5.5 | 5.2 |
| | | 35 | 4.50 | - | - | - | 1.1 | 4.5 | 4.8 | 390 | 1510 | 1790 | 7.0 | 6.7 | 6.4 |
| | | 50 | 5.80 | - | - | - | 1.1 | 5.8 | 6.2 | 390 | 1950 | 2310 | 9.0 | 8.7 | 8.3 |
| | | 60 | 6.80 | - | - | - | 1.1 | 6.8 | 7.1 | 390 | 2240 | 2660 | 10.4 | 9.9 | 9.5 |
| | | 71 | 8.00 | - | - | - | 1.1 | 8.0 | 8.1 | 390 | 2740 | 3000 | 12.7 | 12.2 | 11.6 |
| | 2 room | 20 + 20 | 2.70 | 2.70 | - | - | 1.5 | 5.4 | 7.0 | 350 | 1370 | 1870 | 6.4 | 6.1 | 5.9 |
| | | 20 + 25 | 2.62 | 3.28 | - | - | 1.5 | 5.9 | 7.3 | 350 | 1560 | 2130 | 7.3 | 6.9 | 6.7 |
| | | 20 + 35 | 2.51 | 4.39 | - | - | 1.5 | 6.9 | 7.9 | 350 | 1950 | 2650 | 9.0 | 8.7 | 8.3 |
| | | 20 + 50 | 2.46 | 6.14 | - | - | 1.5 | 8.6 | 8.7 | 350 | 2460 | 3000 | 11.4 | 10.9 | 10.5 |
| | | 20 + 60 | 2.15 | 6.45 | - | - | 1.5 | 8.6 | 8.7 | 350 | 2460 | 3000 | 11.4 | 10.9 | 10.5 |
| | | 20 + 71 | 1.89 | 6.71 | - | - | 1.5 | 8.6 | 8.7 | 350 | 2460 | 3000 | 11.4 | 10.9 | 10.5 |
| | | 25 + 25 | 3.20 | 3.20 | - | - | 1.5 | 6.4 | 7.7 | 350 | 1740 | 2480 | 8.1 | 7.7 | 7.4 |
| | | 25 + 35 | 3.08 | 4.32 | - | - | 1.5 | 7.4 | 8.2 | 350 | 2130 | 2910 | 9.9 | 9.4 | 9.1 |
| | | 25 + 50 | 2.87 | 5.73 | - | - | 1.5 | 8.6 | 8.7 | 350 | 2460 | 3000 | 11.4 | 10.9 | 10.5 |
| | | 25 + 60 | 2.53 | 6.07 | - | - | 1.5 | 8.6 | 8.7 | 350 | 2460 | 3000 | 11.4 | 10.9 | 10.5 |
| | | 25 + 71 | 2.24 | 6.36 | - | - | 1.5 | 8.6 | 8.7 | 350 | 2460 | 3000 | 11.4 | 10.9 | 10.5 |
| | | 35 + 35 | 4.30 | 4.30 | - | - | 1.5 | 8.6 | 8.7 | 350 | 2460 | 3000 | 11.4 | 10.9 | 10.5 |
| | | 35 + 50 | 3.54 | 5.06 | - | - | 1.5 | 8.6 | 8.7 | 350 | 2460 | 3000 | 11.4 | 10.9 | 10.5 |
| | | 35 + 60 | 3.17 | 5.43 | - | - | 1.5 | 8.6 | 8.7 | 350 | 2460 | 3000 | 11.4 | 10.9 | 10.5 |
| | | 35 + 71 | 2.84 | 5.76 | - | - | 1.5 | 8.6 | 8.7 | 350 | 2460 | 3000 | 11.4 | 10.9 | 10.5 |
| | | 50 + 50 | 4.30 | 4.30 | - | - | 1.5 | 8.6 | 8.7 | 350 | 2460 | 3000 | 11.4 | 10.9 | 10.5 |
| | | 50 + 60 | 3.91 | 4.69 | - | - | 1.5 | 8.6 | 8.7 | 350 | 2460 | 3000 | 11.4 | 10.9 | 10.5 |
| | | 50 + 71 | 3.55 | 5.05 | - | - | 1.5 | 8.6 | 8.7 | 350 | 2460 | 3000 | 11.4 | 10.9 | 10.5 |
| | | 60 + 60 | 4.30 | 4.30 | - | - | 1.5 | 8.6 | 8.7 | 350 | 2460 | 3000 | 11.4 | 10.9 | 10.5 |
| | 3 room | 20 + 20 + 20 | 2.57 | 2.57 | 2.57 | - | 1.6 | 7.7 | 8.9 | 370 | 1870 | 3000 | 8.7 | 8.3 | 8.0 |
| | | 20 + 20 + 25 | 2.46 | 2.46 | 3.08 | - | 1.6 | 8.0 | 8.9 | 370 | 1970 | 3000 | 9.1 | 8.7 | 8.4 |
| | | 20 + 20 + 35 | 2.29 | 2.29 | 4.01 | - | 1.6 | 8.6 | 8.9 | 370 | 2410 | 3000 | 11.2 | 10.7 | 10.2 |
| | | 20 + 20 + 50 | 1.91 | 1.91 | 4.78 | - | 1.6 | 8.6 | 8.9 | 370 | 2410 | 3000 | 11.2 | 10.7 | 10.2 |
| | | 20 + 20 + 60 | 1.72 | 1.72 | 5.16 | - | 1.6 | 8.6 | 8.9 | 370 | 2410 | 3000 | 11.2 | 10.7 | 10.2 |
| | | 20 + 20 + 71 | 1.55 | 1.55 | 5.50 | - | 1.6 | 8.6 | 8.9 | 370 | 2410 | 3000 | 11.2 | 10.7 | 10.2 |
| | | 20 + 25 + 25 | 2.46 | 3.07 | 3.07 | - | 1.6 | 8.6 | 8.9 | 370 | 2410 | 3000 | 11.2 | 10.7 | 10.2 |
| | | 20 + 25 + 35 | 2.15 | 2.69 | 3.76 | - | 1.6 | 8.6 | 8.9 | 370 | 2410 | 3000 | 11.2 | 10.7 | 10.2 |
| | | 20 + 25 + 50 | 1.81 | 2.26 | 4.53 | - | 1.6 | 8.6 | 8.9 | 370 | 2410 | 3000 | 11.2 | 10.7 | 10.2 |
| | | 20 + 25 + 60 | 1.64 | 2.05 | 4.91 | - | 1.6 | 8.6 | 8.9 | 370 | 2410 | 3000 | 11.2 | 10.7 | 10.2 |
| | | 20 + 25 + 71 | 1.48 | 1.85 | 5.26 | - | 1.6 | 8.6 | 8.9 | 370 | 2410 | 3000 | 11.2 | 10.7 | 10.2 |
| | | 20 + 35 + 35 | 1.91 | 3.34 | 3.34 | - | 1.6 | 8.6 | 8.9 | 370 | 2410 | 3000 | 11.2 | 10.7 | 10.2 |
| | | 20 + 35 + 50 | 1.64 | 2.87 | 4.10 | - | 1.6 | 8.6 | 8.9 | 370 | 2410 | 3000 | 11.2 | 10.7 | 10.2 |
| | | 20 + 35 + 60 | 1.50 | 2.62 | 4.49 | - | 1.6 | 8.6 | 8.9 | 370 | 2410 | 3000 | 11.2 | 10.7 | 10.2 |
| | | 20 + 35 + 71 | 1.37 | 2.39 | 4.85 | - | 1.6 | 8.6 | 8.9 | 370 | 2410 | 3000 | 11.2 | 10.7 | 10.2 |
| | | 20 + 50 + 50 | 1.43 | 3.58 | 3.58 | - | 1.6 | 8.6 | 8.9 | 370 | 2410 | 3000 | 11.2 | 10.7 | 10.2 |
| | | 25 + 25 + 25 | 2.87 | 2.87 | 2.87 | - | 1.6 | 8.6 | 8.9 | 370 | 2410 | 3000 | 11.2 | 10.7 | 10.2 |
| | | 25 + 25 + 35 | 2.53 | 2.53 | 3.54 | - | 1.6 | 8.6 | 8.9 | 370 | 2410 | 3000 | 11.2 | 10.7 | 10.2 |
| | | 25 + 25 + 50 | 2.15 | 2.15 | 4.30 | - | 1.6 | 8.6 | 8.9 | 370 | 2410 | 3000 | 11.2 | 10.7 | 10.2 |
| | | 25 + 25 + 60 | 1.95 | 1.95 | 4.69 | - | 1.6 | 8.6 | 8.9 | 370 | 2410 | 3000 | 11.2 | 10.7 | 10.2 |
| | | 25 + 25 + 71 | 1.78 | 1.78 | 5.05 | - | 1.6 | 8.6 | 8.9 | 370 | 2410 | 3000 | 11.2 | 10.7 | 10.2 |
| | | 25 + 35 + 35 | 2.26 | 3.17 | 3.17 | - | 1.6 | 8.6 | 8.9 | 370 | 2410 | 3000 | 11.2 | 10.7 | 10.2 |
| | | 25 + 35 + 50 | 1.95 | 2.74 | 3.91 | - | 1.6 | 8.6 | 8.9 | 370 | 2410 | 3000 | 11.2 | 10.7 | 10.2 |
| | | 25 + 35 + 60 | 1.79 | 2.51 | 4.30 | - | 1.6 | 8.6 | 8.9 | 370 | 2410 | 3000 | 11.2 | 10.7 | 10.2 |
| | | 25 + 50 + 50 | 1.72 | 3.44 | 3.44 | - | 1.6 | 8.6 | 8.9 | 370 | 2410 | 3000 | 11.2 | 10.7 | 10.2 |
| | | 35 + 35 + 35 | 2.87 | 2.87 | 2.87 | - | 1.6 | 8.6 | 8.9 | 370 | 2410 | 3000 | 11.2 | 10.7 | 10.2 |
| | | 35 + 35 + 50 | 2.51 | 2.51 | 3.58 | - | 1.6 | 8.6 | 8.9 | 370 | 2410 | 3000 | 11.2 | 10.7 | 10.2 |
| | 4 room | 20 + 20 + 20 + 20 | 2.15 | 2.15 | 2.15 | 2.15 | 1.7 | 8.6 | 9.1 | 350 | 1990 | 3000 | 9.2 | 8.8 | 8.5 |
| | | 20 + 20 + 20 + 25 | 2.02 | 2.02 | 2.02 | 2.53 | 1.7 | 8.6 | 9.1 | 350 | 1990 | 3000 | 9.2 | 8.8 | 8.5 |
| | | 20 + 20 + 20 + 35 | 1.81 | 1.81 | 1.81 | 3.17 | 1.7 | 8.6 | 9.1 | 350 | 1990 | 3000 | 9.2 | 8.8 | 8.5 |
| | | 20 + 20 + 20 + 50 | 1.56 | 1.56 | 1.56 | 3.91 | 1.7 | 8.6 | 9.1 | 350 | 1990 | 3000 | 9.2 | 8.8 | 8.5 |
| | | 20 + 20 + 20 + 60 | 1.43 | 1.43 | 1.43 | 4.30 | 1.7 | 8.6 | 9.1 | 350 | 1990 | 3000 | 9.2 | 8.8 | 8.5 |
| | | 20 + 20 + 25 + 25 | 1.91 | 1.91 | 2.39 | 2.39 | 1.7 | 8.6 | 9.1 | 350 | 1990 | 3000 | 9.2 | 8.8 | 8.5 |
| | | 20 + 20 + 25 + 35 | 1.72 | 1.72 | 2.15 | 3.01 | 1.7 | 8.6 | 9.1 | 350 | 1990 | 3000 | 9.2 | 8.8 | 8.5 |
| | | 20 + 20 + 25 + 50 | 1.50 | 1.50 | 1.87 | 3.74 | 1.7 | 8.6 | 9.1 | 350 | 1990 | 3000 | 9.2 | 8.8 | 8.5 |
| | | 20 + 20 + 25 + 60 | 1.38 | 1.38 | 1.72 | 4.13 | 1.7 | 8.6 | 9.1 | 350 | 1990 | 3000 | 9.2 | 8.8 | 8.5 |
| | | 20 + 20 + 35 + 35 | 1.56 | 1.56 | 2.74 | 2.74 | 1.7 | 8.6 | 9.1 | 350 | 1990 | 3000 | 9.2 | 8.8 | 8.5 |
| | | 20 + 20 + 35 + 50 | 1.38 | 1.38 | 2.41 | 3.44 | 1.7 | 8.6 | 9.1 | 350 | 1990 | 3000 | 9.2 | 8.8 | 8.5 |
| | | 20 + 25 + 25 + 25 | 1.81 | 2.26 | 2.26 | 2.26 | 1.7 | 8.6 | 9.1 | 350 | 1990 | 3000 | 9.2 | 8.8 | 8.5 |
| | | 20 + 25 + 25 + 35 | 1.64 | 2.05 | 2.05 | 2.87 | 1.7 | 8.6 | 9.1 | 350 | 1990 | 3000 | 9.2 | 8.8 | 8.5 |
| | | 20 + 25 + 25 + 50 | 1.43 | 1.79 | 1.79 | 3.58 | 1.7 | 8.6 | 9.1 | 350 | 1990 | 3000 | 9.2 | 8.8 | 8.5 |
| | | 20 + 25 + 35 + 35 | 1.50 | 1.87 | 2.62 | 2.62 | 1.7 | 8.6 | 9.1 | 350 | 1990 | 3000 | 9.2 | 8.8 | 8.5 |
| | | 20 + 35 + 35 + 35 | 1.38 | 2.41 | 2.41 | 2.41 | 1.7 | 8.6 | 9.1 | 350 | 1990 | 3000 | 9.2 | 8.8 | 8.5 |
| | | 25 + 25 + 25 + 25 | 2.15 | 2.15 | 2.15 | 2.15 | 1.7 | 8.6 | 9.1 | 350 | 1990 | 3000 | 9.2 | 8.8 | 8.5 |
| | | 25 + 25 + 25 + 35 | 1.95 | 1.95 | 1.95 | 2.74 | 1.7 | 8.6 | 9.1 | 350 | 1990 | 3000 | 9.2 | 8.8 | 8.5 |
| | | 25 + 25 + 25 + 50 | 1.72 | 1.72 | 1.72 | 3.44 | 1.7 | 8.6 | 9.1 | 350 | 1990 | 3000 | 9.2 | 8.8 | 8.5 |
| | | 25 + 25 + 35 + 35 | 1.79 | 1.79 | 2.51 | 2.51 | 1.7 | 8.6 | 9.1 | 350 | 1990 | 3000 | 9.2 | 8.8 | 8.5 |

# MULTI-SPLIT SYSTEM

| Indoor unit combination | | | Cooling capacity (kW) | | | | | | | Power consumption(W) | | | Standard current(A) | | |
|---|---|---|---|---|---|---|---|---|---|---|---|---|---|---|---|
| | | | Room cooling capacity | | | | Total capacity | | | | | | | | |
| | | | A | B | C | D | Min. | Standard | Max. | Min. | Standard | Max. | 220V | 230V | 240V |
| Cooling operation | 1 room | 20 | 2.00 | - | - | - | 1.8 | 2.0 | 2.7 | 480 | 530 | 950 | 2.5 | 2.4 | 2.3 |
| | | 25 | 2.50 | - | - | - | 1.8 | 2.5 | 3.2 | 480 | 730 | 1080 | 3.5 | 3.3 | 3.2 |
| | | 35 | 3.50 | - | - | - | 1.8 | 3.5 | 3.7 | 480 | 1120 | 1240 | 5.2 | 5.0 | 4.8 |
| | | 50 | 5.00 | - | - | - | 1.8 | 5.0 | 5.8 | 480 | 1710 | 2100 | 7.9 | 7.5 | 7.2 |
| | | 60 | 6.00 | - | - | - | 1.8 | 6.0 | 6.7 | 480 | 2140 | 2700 | 9.8 | 9.4 | 9.0 |
| | | 71 | 7.10 | - | - | - | 1.8 | 7.1 | 7.2 | 480 | 2430 | 2830 | 11.2 | 10.7 | 10.2 |
| | 2 room | 20 + 20 | 2.00 | 2.00 | - | - | 3.0 | 4.0 | 5.8 | 550 | 930 | 1910 | 4.4 | 4.2 | 4.0 |
| | | 20 + 25 | 2.00 | 2.50 | - | - | 3.0 | 4.5 | 6.1 | 550 | 1170 | 2060 | 5.5 | 5.2 | 5.0 |
| | | 20 + 35 | 2.00 | 3.50 | - | - | 3.0 | 5.5 | 6.6 | 550 | 1590 | 2320 | 7.3 | 7.0 | 6.7 |
| | | 20 + 50 | 2.03 | 5.07 | - | - | 3.0 | 7.1 | 7.3 | 550 | 2340 | 2750 | 10.7 | 10.3 | 9.8 |
| | | 20 + 60 | 1.78 | 5.33 | - | - | 3.0 | 7.1 | 7.3 | 550 | 2340 | 2750 | 10.7 | 10.3 | 9.8 |
| | | 20 + 71 | 1.56 | 5.54 | - | - | 3.0 | 7.1 | 7.3 | 550 | 2340 | 2750 | 10.7 | 10.3 | 9.8 |
| | | 25 + 25 | 2.50 | 2.50 | - | - | 3.0 | 5.0 | 6.5 | 550 | 1360 | 2270 | 6.3 | 6.0 | 5.8 |
| | | 25 + 35 | 2.46 | 3.44 | - | - | 3.0 | 5.9 | 6.8 | 550 | 1780 | 2470 | 8.2 | 7.8 | 7.5 |
| | | 25 + 50 | 2.37 | 4.73 | - | - | 3.0 | 7.1 | 7.3 | 550 | 2340 | 2750 | 10.7 | 10.3 | 9.8 |
| | | 25 + 60 | 2.09 | 5.01 | - | - | 3.0 | 7.1 | 7.3 | 550 | 2340 | 2750 | 10.7 | 10.3 | 9.8 |
| | | 25 + 71 | 1.85 | 5.25 | - | - | 3.0 | 7.1 | 7.3 | 550 | 2340 | 2750 | 10.7 | 10.3 | 9.8 |
| | | 35 + 35 | 3.55 | 3.55 | - | - | 3.0 | 7.1 | 7.3 | 550 | 2340 | 2750 | 10.7 | 10.3 | 9.8 |
| | | 35 + 50 | 2.92 | 4.18 | - | - | 3.0 | 7.1 | 7.3 | 550 | 2340 | 2750 | 10.7 | 10.3 | 9.8 |
| | | 35 + 60 | 2.62 | 4.48 | - | - | 3.0 | 7.1 | 7.3 | 550 | 2340 | 2750 | 10.7 | 10.3 | 9.8 |
| | | 35 + 71 | 2.34 | 4.76 | - | - | 3.0 | 7.1 | 7.3 | 550 | 2340 | 2750 | 10.7 | 10.3 | 9.8 |
| | | 50 + 50 | 3.55 | 3.55 | - | - | 3.0 | 7.1 | 7.3 | 550 | 2340 | 2750 | 10.7 | 10.3 | 9.8 |
| | | 50 + 60 | 3.23 | 3.87 | - | - | 3.0 | 7.1 | 7.3 | 550 | 2340 | 2750 | 10.7 | 10.3 | 9.8 |
| | | 50 + 71 | 2.93 | 4.17 | - | - | 3.0 | 7.1 | 7.3 | 550 | 2340 | 2750 | 10.7 | 10.3 | 9.8 |
| | | 60 + 60 | 3.55 | 3.55 | - | - | 3.0 | 7.1 | 7.3 | 550 | 2340 | 2750 | 10.7 | 10.3 | 9.8 |
| | 3 room | 20 + 20 + 20 | 2.00 | 2.00 | 2.00 | - | 3.7 | 6.0 | 7.8 | 670 | 1440 | 2750 | 6.6 | 6.4 | 6.1 |
| | | 20 + 20 + 25 | 2.00 | 2.00 | 2.50 | - | 3.7 | 6.5 | 7.8 | 670 | 1630 | 2750 | 7.5 | 7.2 | 6.9 |
| | | 20 + 20 + 35 | 1.89 | 1.89 | 3.31 | - | 3.7 | 7.1 | 7.8 | 670 | 1870 | 2750 | 8.6 | 8.2 | 7.9 |
| | | 20 + 20 + 50 | 1.58 | 1.58 | 3.94 | - | 3.7 | 7.1 | 7.8 | 670 | 1870 | 2750 | 8.6 | 8.2 | 7.9 |
| | | 20 + 20 + 60 | 1.42 | 1.42 | 4.26 | - | 3.7 | 7.1 | 7.8 | 670 | 1870 | 2750 | 8.6 | 8.2 | 7.9 |
| | | 20 + 20 + 71 | 1.28 | 1.28 | 4.54 | - | 3.7 | 7.1 | 7.8 | 670 | 1870 | 2750 | 8.6 | 8.2 | 7.9 |
| | | 20 + 25 + 25 | 2.03 | 2.54 | 2.54 | - | 3.7 | 7.1 | 7.8 | 670 | 1870 | 2750 | 8.6 | 8.2 | 7.9 |
| | | 20 + 25 + 35 | 1.78 | 2.22 | 3.11 | - | 3.7 | 7.1 | 7.8 | 670 | 1870 | 2750 | 8.6 | 8.2 | 7.9 |
| | | 20 + 25 + 50 | 1.49 | 1.87 | 3.74 | - | 3.7 | 7.1 | 7.8 | 670 | 1870 | 2750 | 8.6 | 8.2 | 7.9 |
| | | 20 + 25 + 60 | 1.35 | 1.69 | 4.06 | - | 3.7 | 7.1 | 7.8 | 670 | 1870 | 2750 | 8.6 | 8.2 | 7.9 |
| | | 20 + 25 + 71 | 1.22 | 1.53 | 4.35 | - | 3.7 | 7.1 | 7.8 | 670 | 1870 | 2750 | 8.6 | 8.2 | 7.9 |
| | | 20 + 35 + 35 | 1.58 | 2.76 | 2.76 | - | 3.7 | 7.1 | 7.8 | 670 | 1870 | 2750 | 8.6 | 8.2 | 7.9 |
| | | 20 + 35 + 50 | 1.35 | 2.37 | 3.38 | - | 3.7 | 7.1 | 7.8 | 670 | 1870 | 2750 | 8.6 | 8.2 | 7.9 |
| | | 20 + 35 + 60 | 1.23 | 2.16 | 3.70 | - | 3.7 | 7.1 | 7.8 | 670 | 1870 | 2750 | 8.6 | 8.2 | 7.9 |
| | | 20 + 35 + 71 | 1.13 | 1.97 | 4.00 | - | 3.7 | 7.1 | 7.8 | 670 | 1870 | 2750 | 8.6 | 8.2 | 7.9 |
| | | 20 + 50 + 50 | 1.18 | 2.96 | 2.96 | - | 3.7 | 7.1 | 7.8 | 670 | 1870 | 2750 | 8.6 | 8.2 | 7.9 |
| | | 25 + 25 + 25 | 2.37 | 2.37 | 2.37 | - | 3.7 | 7.1 | 7.8 | 670 | 1870 | 2750 | 8.6 | 8.2 | 7.9 |
| | | 25 + 25 + 35 | 2.09 | 2.09 | 2.92 | - | 3.7 | 7.1 | 7.8 | 670 | 1870 | 2750 | 8.6 | 8.2 | 7.9 |
| | | 25 + 25 + 50 | 1.78 | 1.78 | 3.55 | - | 3.7 | 7.1 | 7.8 | 670 | 1870 | 2750 | 8.6 | 8.2 | 7.9 |
| | | 25 + 25 + 60 | 1.61 | 1.61 | 3.87 | - | 3.7 | 7.1 | 7.8 | 670 | 1870 | 2750 | 8.6 | 8.2 | 7.9 |
| | | 25 + 25 + 71 | 1.47 | 1.47 | 4.17 | - | 3.7 | 7.1 | 7.8 | 670 | 1870 | 2750 | 8.6 | 8.2 | 7.9 |
| | | 25 + 35 + 35 | 1.87 | 2.62 | 2.62 | - | 3.7 | 7.1 | 7.8 | 670 | 1870 | 2750 | 8.6 | 8.2 | 7.9 |
| | | 25 + 35 + 50 | 1.61 | 2.26 | 3.23 | - | 3.7 | 7.1 | 7.8 | 670 | 1870 | 2750 | 8.6 | 8.2 | 7.9 |
| | | 25 + 35 + 60 | 1.48 | 2.07 | 3.55 | - | 3.7 | 7.1 | 7.8 | 670 | 1870 | 2750 | 8.6 | 8.2 | 7.9 |
| | | 25 + 50 + 50 | 1.42 | 2.84 | 2.84 | - | 3.7 | 7.1 | 7.8 | 670 | 1870 | 2750 | 8.6 | 8.2 | 7.9 |
| | | 35 + 35 + 35 | 2.37 | 2.37 | 2.37 | - | 3.7 | 7.1 | 7.8 | 670 | 1870 | 2750 | 8.6 | 8.2 | 7.9 |
| | | 35 + 35 + 50 | 2.07 | 2.07 | 2.96 | - | 3.7 | 7.1 | 7.8 | 670 | 1870 | 2750 | 8.6 | 8.2 | 7.9 |
| | 4 room | 20 + 20 + 20 + 20 | 1.78 | 1.78 | 1.78 | 1.78 | 4.4 | 7.1 | 8.3 | 890 | 1780 | 2750 | 8.2 | 7.8 | 7.5 |
| | | 20 + 20 + 20 + 25 | 1.67 | 1.67 | 1.67 | 2.09 | 4.4 | 7.1 | 8.3 | 890 | 1780 | 2750 | 8.2 | 7.8 | 7.5 |
| | | 20 + 20 + 20 + 35 | 1.49 | 1.49 | 1.49 | 2.62 | 4.4 | 7.1 | 8.3 | 890 | 1780 | 2750 | 8.2 | 7.8 | 7.5 |
| | | 20 + 20 + 20 + 50 | 1.29 | 1.29 | 1.29 | 3.23 | 4.4 | 7.1 | 8.3 | 890 | 1780 | 2750 | 8.2 | 7.8 | 7.5 |
| | | 20 + 20 + 20 + 60 | 1.18 | 1.18 | 1.18 | 3.55 | 4.4 | 7.1 | 8.3 | 890 | 1780 | 2750 | 8.2 | 7.8 | 7.5 |
| | | 20 + 20 + 25 + 25 | 1.58 | 1.58 | 1.97 | 1.97 | 4.4 | 7.1 | 8.3 | 890 | 1780 | 2750 | 8.2 | 7.8 | 7.5 |
| | | 20 + 20 + 25 + 35 | 1.42 | 1.42 | 1.78 | 2.49 | 4.4 | 7.1 | 8.3 | 890 | 1780 | 2750 | 8.2 | 7.8 | 7.5 |
| | | 20 + 20 + 25 + 50 | 1.23 | 1.23 | 1.54 | 3.09 | 4.4 | 7.1 | 8.3 | 890 | 1780 | 2750 | 8.2 | 7.8 | 7.5 |
| | | 20 + 20 + 25 + 60 | 1.14 | 1.14 | 1.42 | 3.41 | 4.4 | 7.1 | 8.3 | 890 | 1780 | 2750 | 8.2 | 7.8 | 7.5 |
| | | 20 + 20 + 35 + 35 | 1.29 | 1.29 | 2.26 | 2.26 | 4.4 | 7.1 | 8.3 | 890 | 1780 | 2750 | 8.2 | 7.8 | 7.5 |
| | | 20 + 20 + 35 + 50 | 1.14 | 1.14 | 1.99 | 2.84 | 4.4 | 7.1 | 8.3 | 890 | 1780 | 2750 | 8.2 | 7.8 | 7.5 |
| | | 20 + 25 + 25 + 25 | 1.49 | 1.87 | 1.87 | 1.87 | 4.4 | 7.1 | 8.3 | 890 | 1780 | 2750 | 8.2 | 7.8 | 7.5 |
| | | 20 + 25 + 25 + 35 | 1.35 | 1.69 | 1.69 | 2.37 | 4.4 | 7.1 | 8.3 | 890 | 1780 | 2750 | 8.2 | 7.8 | 7.5 |
| | | 20 + 25 + 25 + 50 | 1.18 | 1.48 | 1.48 | 2.96 | 4.4 | 7.1 | 8.3 | 890 | 1780 | 2750 | 8.2 | 7.8 | 7.5 |
| | | 20 + 25 + 35 + 35 | 1.23 | 1.54 | 2.16 | 2.16 | 4.4 | 7.1 | 8.3 | 890 | 1780 | 2750 | 8.2 | 7.8 | 7.5 |
| | | 20 + 35 + 35 + 35 | 1.14 | 1.99 | 1.99 | 1.99 | 4.4 | 7.1 | 8.3 | 890 | 1780 | 2750 | 8.2 | 7.8 | 7.5 |
| | | 25 + 25 + 25 + 25 | 1.78 | 1.78 | 1.78 | 1.78 | 4.4 | 7.1 | 8.3 | 890 | 1780 | 2750 | 8.2 | 7.8 | 7.5 |
| | | 25 + 25 + 25 + 35 | 1.61 | 1.61 | 1.61 | 2.26 | 4.4 | 7.1 | 8.3 | 890 | 1780 | 2750 | 8.2 | 7.8 | 7.5 |
| | | 25 + 25 + 25 + 50 | 1.42 | 1.42 | 1.42 | 2.84 | 4.4 | 7.1 | 8.3 | 890 | 1780 | 2750 | 8.2 | 7.8 | 7.5 |
| | | 25 + 25 + 35 + 35 | 1.48 | 1.48 | 2.07 | 2.07 | 4.4 | 7.1 | 8.3 | 890 | 1780 | 2750 | 8.2 | 7.8 | 7.5 |

## SCM80ZS-W Table of Indoor unit combination only with SRK-ZSX type

| Indoor unit combination | | | Heating capacity (kW) | | | | | | | Power consumption(W) | | | Standard current(A) | | |
|---|---|---|---|---|---|---|---|---|---|---|---|---|---|---|---|
| | | | Room heating capacity | | | | Total capacity | | | | | | | | |
| | | | A | B | C | D | Min. | Standard | Max. | Min. | Standard | Max. | 220V | 230V | 240V |
| Heating operation | 1 room | 20 | 3.00 | - | - | - | 1.1 | 3.0 | 3.7 | 390 | 840 | 1330 | 4.0 | 3.8 | 3.6 |
| | | 25 | 3.40 | - | - | - | 1.1 | 3.4 | 4.2 | 390 | 1000 | 1510 | 4.7 | 4.5 | 4.3 |
| | | 35 | 4.50 | - | - | - | 1.1 | 4.5 | 5.0 | 390 | 1330 | 1790 | 6.2 | 5.9 | 5.7 |
| | | 50 | 5.80 | - | - | - | 1.1 | 5.8 | 6.5 | 390 | 1780 | 2310 | 8.3 | 7.9 | 7.6 |
| | | 60 | 6.80 | - | - | - | 1.1 | 6.8 | 7.5 | 390 | 2100 | 2660 | 9.7 | 9.3 | 8.9 |
| | 2 room | 20 + 20 | 2.70 | 2.70 | - | - | 1.5 | 5.4 | 7.4 | 350 | 1280 | 1870 | 6.0 | 5.7 | 5.5 |
| | | 20 + 25 | 2.62 | 3.28 | - | - | 1.5 | 5.9 | 7.7 | 350 | 1410 | 2130 | 6.6 | 6.3 | 6.0 |
| | | 20 + 35 | 2.51 | 4.39 | - | - | 1.5 | 6.9 | 8.3 | 350 | 1680 | 2650 | 7.8 | 7.5 | 7.1 |
| | | 20 + 50 | 2.46 | 6.14 | - | - | 1.5 | 8.6 | 9.5 | 350 | 2100 | 3120 | 9.7 | 9.3 | 8.9 |
| | | 20 + 60 | 2.33 | 6.98 | - | - | 1.5 | 9.3 | 9.5 | 350 | 2300 | 3120 | 10.7 | 10.2 | 9.8 |
| | | 25 + 25 | 3.20 | 3.20 | - | - | 1.5 | 6.4 | 8.1 | 350 | 1540 | 2480 | 7.1 | 6.8 | 6.5 |
| | | 25 + 35 | 3.08 | 4.32 | - | - | 1.5 | 7.4 | 8.6 | 350 | 1810 | 2910 | 8.4 | 8.0 | 7.7 |
| | | 25 + 50 | 2.87 | 5.57 | - | - | 1.5 | 8.6 | 9.5 | 350 | 2100 | 3120 | 9.7 | 9.3 | 8.9 |
| | | 25 + 60 | 2.74 | 6.56 | - | - | 1.5 | 9.3 | 9.5 | 350 | 2300 | 3120 | 10.7 | 10.2 | 9.8 |
| | | 35 + 35 | 4.30 | 4.30 | - | - | 1.5 | 8.6 | 9.5 | 350 | 2100 | 3120 | 9.7 | 9.3 | 8.9 |
| | | 35 + 50 | 3.83 | 5.47 | - | - | 1.5 | 9.3 | 9.5 | 350 | 2300 | 3120 | 10.7 | 10.2 | 9.8 |
| | | 35 + 60 | 3.43 | 5.87 | - | - | 1.5 | 9.3 | 9.5 | 350 | 2300 | 3120 | 10.7 | 10.2 | 9.8 |
| | | 50 + 50 | 4.65 | 4.65 | - | - | 1.5 | 9.3 | 9.5 | 350 | 2300 | 3120 | 10.7 | 10.2 | 9.8 |
| | | 50 + 60 | 4.23 | 5.07 | - | - | 1.5 | 9.3 | 9.5 | 350 | 2300 | 3120 | 10.7 | 10.2 | 9.8 |
| | | 60 + 60 | 4.65 | 4.65 | - | - | 1.5 | 9.3 | 9.5 | 350 | 2300 | 3120 | 10.7 | 10.2 | 9.8 |
| | 3 room | 20 + 20 + 20 | 2.57 | 2.57 | 2.57 | - | 1.6 | 7.7 | 9.6 | 370 | 1830 | 3120 | 8.5 | 8.1 | 7.8 |
| | | 20 + 20 + 25 | 2.46 | 2.46 | 3.08 | - | 1.6 | 8.0 | 9.6 | 370 | 1930 | 3120 | 9.0 | 8.6 | 8.2 |
| | | 20 + 20 + 35 | 2.29 | 2.29 | 4.01 | - | 1.6 | 8.6 | 9.6 | 370 | 2060 | 3120 | 9.6 | 9.1 | 8.8 |
| | | 20 + 20 + 50 | 2.07 | 2.07 | 5.17 | - | 1.6 | 9.3 | 9.6 | 370 | 2250 | 3120 | 10.4 | 10.0 | 9.6 |
| | | 20 + 20 + 60 | 1.86 | 1.86 | 5.58 | - | 1.6 | 9.3 | 9.6 | 370 | 2250 | 3120 | 10.4 | 10.0 | 9.6 |
| | | 20 + 25 + 25 | 2.46 | 3.07 | 3.07 | - | 1.6 | 8.6 | 9.6 | 370 | 2060 | 3120 | 9.6 | 9.1 | 8.8 |
| | | 20 + 25 + 35 | 2.33 | 2.91 | 4.07 | - | 1.6 | 9.3 | 9.6 | 370 | 2250 | 3120 | 10.4 | 10.0 | 9.6 |
| | | 20 + 25 + 50 | 1.96 | 2.45 | 4.89 | - | 1.6 | 9.3 | 9.6 | 370 | 2250 | 3120 | 10.4 | 10.0 | 9.6 |
| | | 20 + 25 + 60 | 1.77 | 2.21 | 5.31 | - | 1.6 | 9.3 | 9.6 | 370 | 2250 | 3120 | 10.4 | 10.0 | 9.6 |
| | | 20 + 35 + 35 | 2.07 | 3.62 | 3.62 | - | 1.6 | 9.3 | 9.6 | 370 | 2250 | 3120 | 10.4 | 10.0 | 9.6 |
| | | 20 + 35 + 50 | 1.77 | 3.10 | 4.43 | - | 1.6 | 9.3 | 9.6 | 370 | 2250 | 3120 | 10.4 | 10.0 | 9.6 |
| | | 20 + 35 + 60 | 1.62 | 2.83 | 4.85 | - | 1.6 | 9.3 | 9.6 | 370 | 2250 | 3120 | 10.4 | 10.0 | 9.6 |
| | | 20 + 50 + 50 | 1.55 | 3.88 | 3.88 | - | 1.6 | 9.3 | 9.6 | 370 | 2250 | 3120 | 10.4 | 10.0 | 9.6 |
| | | 20 + 50 + 60 | 1.43 | 3.58 | 4.29 | - | 1.6 | 9.3 | 9.6 | 370 | 2250 | 3120 | 10.4 | 10.0 | 9.6 |
| | | 25 + 25 + 25 | 2.87 | 2.87 | 2.87 | - | 1.6 | 8.6 | 9.6 | 370 | 2060 | 3120 | 9.6 | 9.1 | 8.8 |
| | | 25 + 25 + 35 | 2.74 | 2.74 | 3.83 | - | 1.6 | 9.3 | 9.6 | 370 | 2250 | 3120 | 10.4 | 10.0 | 9.6 |
| | | 25 + 25 + 50 | 2.33 | 2.33 | 4.65 | - | 1.6 | 9.3 | 9.6 | 370 | 2250 | 3120 | 10.4 | 10.0 | 9.6 |
| | | 25 + 25 + 60 | 2.11 | 2.11 | 5.07 | - | 1.6 | 9.3 | 9.6 | 370 | 2250 | 3120 | 10.4 | 10.0 | 9.6 |
| | | 25 + 35 + 35 | 2.45 | 3.43 | 3.43 | - | 1.6 | 9.3 | 9.6 | 370 | 2250 | 3120 | 10.4 | 10.0 | 9.6 |
| | | 25 + 35 + 50 | 2.11 | 2.96 | 4.23 | - | 1.6 | 9.3 | 9.6 | 370 | 2250 | 3120 | 10.4 | 10.0 | 9.6 |
| | | 25 + 35 + 60 | 1.94 | 2.71 | 4.65 | - | 1.6 | 9.3 | 9.6 | 370 | 2250 | 3120 | 10.4 | 10.0 | 9.6 |
| | | 25 + 50 + 50 | 1.86 | 3.72 | 3.72 | - | 1.6 | 9.3 | 9.6 | 370 | 2250 | 3120 | 10.4 | 10.0 | 9.6 |
| | | 25 + 50 + 60 | 1.72 | 3.44 | 4.13 | - | 1.6 | 9.3 | 9.6 | 370 | 2250 | 3120 | 10.4 | 10.0 | 9.6 |
| | | 35 + 35 + 35 | 3.10 | 3.10 | 3.10 | - | 1.6 | 9.3 | 9.6 | 370 | 2250 | 3120 | 10.4 | 10.0 | 9.6 |
| | | 35 + 35 + 50 | 2.71 | 2.71 | 3.88 | - | 1.6 | 9.3 | 9.6 | 370 | 2250 | 3120 | 10.4 | 10.0 | 9.6 |
| | | 35 + 35 + 60 | 2.50 | 2.50 | 4.29 | - | 1.6 | 9.3 | 9.6 | 370 | 2250 | 3120 | 10.4 | 10.0 | 9.6 |
| | | 35 + 50 + 50 | 2.41 | 3.44 | 3.44 | - | 1.6 | 9.3 | 9.6 | 370 | 2250 | 3120 | 10.4 | 10.0 | 9.6 |
| | 4 room | 20 + 20 + 20 + 20 | 2.33 | 2.33 | 2.33 | 2.33 | 1.7 | 9.3 | 9.8 | 350 | 1950 | 3120 | 9.0 | 8.6 | 8.2 |
| | | 20 + 20 + 20 + 25 | 2.19 | 2.19 | 2.19 | 2.74 | 1.7 | 9.3 | 9.8 | 350 | 1950 | 3120 | 9.0 | 8.6 | 8.2 |
| | | 20 + 20 + 20 + 35 | 1.96 | 1.96 | 1.96 | 3.43 | 1.7 | 9.3 | 9.8 | 350 | 1950 | 3120 | 9.0 | 8.6 | 8.2 |
| | | 20 + 20 + 20 + 50 | 1.69 | 1.69 | 1.69 | 4.23 | 1.7 | 9.3 | 9.8 | 350 | 1950 | 3120 | 9.0 | 8.6 | 8.2 |
| | | 20 + 20 + 20 + 60 | 1.55 | 1.55 | 1.55 | 4.65 | 1.7 | 9.3 | 9.8 | 350 | 1950 | 3120 | 9.0 | 8.6 | 8.2 |
| | | 20 + 20 + 25 + 25 | 2.07 | 2.07 | 2.58 | 2.58 | 1.7 | 9.3 | 9.8 | 350 | 1950 | 3120 | 9.0 | 8.6 | 8.2 |
| | | 20 + 20 + 25 + 35 | 1.86 | 1.86 | 2.33 | 3.26 | 1.7 | 9.3 | 9.8 | 350 | 1950 | 3120 | 9.0 | 8.6 | 8.2 |
| | | 20 + 20 + 25 + 50 | 1.62 | 1.62 | 2.02 | 4.04 | 1.7 | 9.3 | 9.8 | 350 | 1950 | 3120 | 9.0 | 8.6 | 8.2 |
| | | 20 + 20 + 25 + 60 | 1.49 | 1.49 | 1.86 | 4.46 | 1.7 | 9.3 | 9.8 | 350 | 1950 | 3120 | 9.0 | 8.6 | 8.2 |
| | | 20 + 20 + 35 + 35 | 1.69 | 1.69 | 2.96 | 2.96 | 1.7 | 9.3 | 9.8 | 350 | 1950 | 3120 | 9.0 | 8.6 | 8.2 |
| | | 20 + 20 + 35 + 50 | 1.49 | 1.49 | 2.60 | 3.72 | 1.7 | 9.3 | 9.8 | 350 | 1950 | 3120 | 9.0 | 8.6 | 8.2 |
| | | 20 + 20 + 35 + 60 | 1.38 | 1.38 | 2.41 | 4.13 | 1.7 | 9.3 | 9.8 | 350 | 1950 | 3120 | 9.0 | 8.6 | 8.2 |
| | | 20 + 25 + 25 + 25 | 1.96 | 2.45 | 2.45 | 2.45 | 1.7 | 9.3 | 9.8 | 350 | 1950 | 3120 | 9.0 | 8.6 | 8.2 |
| | | 20 + 25 + 25 + 35 | 1.77 | 2.21 | 2.21 | 3.10 | 1.7 | 9.3 | 9.8 | 350 | 1950 | 3120 | 9.0 | 8.6 | 8.2 |
| | | 20 + 25 + 25 + 50 | 1.55 | 1.94 | 1.94 | 3.88 | 1.7 | 9.3 | 9.8 | 350 | 1950 | 3120 | 9.0 | 8.6 | 8.2 |
| | | 20 + 25 + 25 + 60 | 1.43 | 1.79 | 1.79 | 4.29 | 1.7 | 9.3 | 9.8 | 350 | 1950 | 3120 | 9.0 | 8.6 | 8.2 |
| | | 20 + 25 + 35 + 35 | 1.62 | 2.02 | 2.83 | 2.83 | 1.7 | 9.3 | 9.8 | 350 | 1950 | 3120 | 9.0 | 8.6 | 8.2 |
| | | 20 + 25 + 35 + 50 | 1.43 | 1.79 | 2.50 | 3.58 | 1.7 | 9.3 | 9.8 | 350 | 1950 | 3120 | 9.0 | 8.6 | 8.2 |
| | | 20 + 35 + 35 + 35 | 1.49 | 2.60 | 2.60 | 2.60 | 1.7 | 9.3 | 9.8 | 350 | 1950 | 3120 | 9.0 | 8.6 | 8.2 |
| | | 25 + 25 + 25 + 25 | 2.33 | 2.33 | 2.33 | 2.33 | 1.7 | 9.3 | 9.8 | 350 | 1950 | 3120 | 9.0 | 8.6 | 8.2 |
| | | 25 + 25 + 25 + 35 | 2.11 | 2.11 | 2.11 | 2.96 | 1.7 | 9.3 | 9.8 | 350 | 1950 | 3120 | 9.0 | 8.6 | 8.2 |
| | | 25 + 25 + 25 + 50 | 1.86 | 1.86 | 1.86 | 3.72 | 1.7 | 9.3 | 9.8 | 350 | 1950 | 3120 | 9.0 | 8.6 | 8.2 |
| | | 25 + 25 + 25 + 60 | 1.72 | 1.72 | 1.72 | 4.13 | 1.7 | 9.3 | 9.8 | 350 | 1950 | 3120 | 9.0 | 8.6 | 8.2 |
| | | 25 + 25 + 35 + 35 | 1.94 | 1.94 | 2.71 | 2.71 | 1.7 | 9.3 | 9.8 | 350 | 1950 | 3120 | 9.0 | 8.6 | 8.2 |
| | | 25 + 25 + 35 + 50 | 1.72 | 1.72 | 2.41 | 3.44 | 1.7 | 9.3 | 9.8 | 350 | 1950 | 3120 | 9.0 | 8.6 | 8.2 |
| | | 25 + 35 + 35 + 35 | 1.79 | 2.50 | 2.50 | 2.50 | 1.7 | 9.3 | 9.8 | 350 | 1950 | 3120 | 9.0 | 8.6 | 8.2 |

# MULTI-SPLIT SYSTEM

| Indoor unit combination | | | Cooling capacity (kW) | | | | | | | Power consumption(W) | | | Standard current(A) | | |
|---|---|---|---|---|---|---|---|---|---|---|---|---|---|---|---|
| | | | Room cooling capacity | | | | Total capacity | | | | | | | | |
| | | | A | B | C | D | Min. | Standard | Max. | Min. | Standard | Max. | 220V | 230V | 240V |
| Cooling operation | 1 room | 20 | 2.00 | - | - | - | 1.8 | 2.0 | 2.8 | 480 | 500 | 950 | 2.4 | 2.3 | 2.2 |
| | | 25 | 2.50 | - | - | - | 1.8 | 2.5 | 3.4 | 480 | 680 | 1080 | 3.2 | 3.1 | 3.0 |
| | | 35 | 3.50 | - | - | - | 1.8 | 3.5 | 3.9 | 480 | 1010 | 1240 | 4.7 | 4.5 | 4.3 |
| | | 50 | 5.00 | - | - | - | 1.8 | 5.0 | 6.1 | 480 | 1530 | 2100 | 7.0 | 6.7 | 6.4 |
| | | 60 | 6.00 | - | - | - | 1.8 | 6.0 | 7.0 | 480 | 1880 | 2700 | 8.6 | 8.3 | 7.9 |
| | 2 room | 20 + 20 | 2.00 | 2.00 | - | - | 3.0 | 4.0 | 6.1 | 550 | 840 | 1910 | 4.0 | 3.8 | 3.6 |
| | | 20 + 25 | 2.00 | 2.50 | - | - | 3.0 | 4.5 | 6.4 | 550 | 990 | 2060 | 4.6 | 4.4 | 4.3 |
| | | 20 + 35 | 2.00 | 3.50 | - | - | 3.0 | 5.5 | 6.9 | 550 | 1320 | 2320 | 6.1 | 5.8 | 5.6 |
| | | 20 + 50 | 2.03 | 5.07 | - | - | 3.0 | 7.1 | 8.5 | 550 | 1970 | 2830 | 9.0 | 8.7 | 8.3 |
| | | 20 + 60 | 2.00 | 6.00 | - | - | 3.0 | 8.0 | 8.5 | 550 | 2420 | 2830 | 11.1 | 10.6 | 10.2 |
| | | 25 + 25 | 2.50 | 2.50 | - | - | 3.0 | 5.0 | 6.8 | 550 | 1150 | 2270 | 5.4 | 5.1 | 4.9 |
| | | 25 + 35 | 2.46 | 3.44 | - | - | 3.0 | 5.9 | 7.2 | 550 | 1560 | 2470 | 7.2 | 6.9 | 6.6 |
| | | 25 + 50 | 2.47 | 4.93 | - | - | 3.0 | 7.4 | 8.5 | 550 | 2090 | 2830 | 9.6 | 9.2 | 8.8 |
| | | 25 + 60 | 2.35 | 5.65 | - | - | 3.0 | 8.0 | 8.5 | 550 | 2420 | 2830 | 11.1 | 10.6 | 10.2 |
| | | 35 + 35 | 3.55 | 3.55 | - | - | 3.0 | 7.1 | 8.5 | 550 | 1970 | 2830 | 9.0 | 8.7 | 8.3 |
| | | 35 + 50 | 3.29 | 4.71 | - | - | 3.0 | 8.0 | 8.5 | 550 | 2420 | 2830 | 11.1 | 10.6 | 10.2 |
| | | 35 + 60 | 2.95 | 5.05 | - | - | 3.0 | 8.0 | 8.5 | 550 | 2420 | 2830 | 11.1 | 10.6 | 10.2 |
| | | 50 + 50 | 4.00 | 4.00 | - | - | 3.0 | 8.0 | 8.5 | 550 | 2420 | 2830 | 11.1 | 10.6 | 10.2 |
| | | 50 + 60 | 3.64 | 4.36 | - | - | 3.0 | 8.0 | 8.5 | 550 | 2420 | 2830 | 11.1 | 10.6 | 10.2 |
| | | 60 + 60 | 4.00 | 4.00 | - | - | 3.0 | 8.0 | 8.5 | 550 | 2420 | 2830 | 11.1 | 10.6 | 10.2 |
| | 3 room | 20 + 20 + 20 | 2.00 | 2.00 | 2.00 | - | 3.7 | 6.0 | 8.8 | 670 | 1240 | 2830 | 5.8 | 5.5 | 5.3 |
| | | 20 + 20 + 25 | 2.00 | 2.00 | 2.50 | - | 3.7 | 6.5 | 8.8 | 670 | 1390 | 2830 | 6.4 | 6.1 | 5.9 |
| | | 20 + 20 + 35 | 1.89 | 1.89 | 3.31 | - | 3.7 | 7.1 | 8.8 | 670 | 1520 | 2830 | 7.0 | 6.7 | 6.4 |
| | | 20 + 20 + 50 | 1.78 | 1.78 | 4.44 | - | 3.7 | 8.0 | 8.8 | 670 | 1910 | 2830 | 8.8 | 8.4 | 8.0 |
| | | 20 + 20 + 60 | 1.60 | 1.60 | 4.80 | - | 3.7 | 8.0 | 8.8 | 670 | 1910 | 2830 | 8.8 | 8.4 | 8.0 |
| | | 20 + 25 + 25 | 2.03 | 2.54 | 2.54 | - | 3.7 | 7.1 | 8.8 | 670 | 1520 | 2830 | 7.0 | 6.7 | 6.4 |
| | | 20 + 25 + 35 | 2.00 | 2.50 | 3.50 | - | 3.7 | 8.0 | 8.8 | 670 | 1910 | 2830 | 8.8 | 8.4 | 8.0 |
| | | 20 + 25 + 50 | 1.68 | 2.11 | 4.21 | - | 3.7 | 8.0 | 8.8 | 670 | 1910 | 2830 | 8.8 | 8.4 | 8.0 |
| | | 20 + 25 + 60 | 1.52 | 1.90 | 4.57 | - | 3.7 | 8.0 | 8.8 | 670 | 1910 | 2830 | 8.8 | 8.4 | 8.0 |
| | | 20 + 35 + 35 | 1.78 | 3.11 | 3.11 | - | 3.7 | 8.0 | 8.8 | 670 | 1910 | 2830 | 8.8 | 8.4 | 8.0 |
| | | 20 + 35 + 50 | 1.52 | 2.67 | 3.81 | - | 3.7 | 8.0 | 8.8 | 670 | 1910 | 2830 | 8.8 | 8.4 | 8.0 |
| | | 20 + 35 + 60 | 1.39 | 2.43 | 4.17 | - | 3.7 | 8.0 | 8.8 | 670 | 1910 | 2830 | 8.8 | 8.4 | 8.0 |
| | | 20 + 50 + 50 | 1.33 | 3.33 | 3.33 | - | 3.7 | 8.0 | 8.8 | 670 | 1910 | 2830 | 8.8 | 8.4 | 8.0 |
| | | 20 + 50 + 60 | 1.23 | 3.08 | 3.69 | - | 3.7 | 8.0 | 8.8 | 670 | 1910 | 2830 | 8.8 | 8.4 | 8.0 |
| | | 25 + 25 + 25 | 2.37 | 2.37 | 2.37 | - | 3.7 | 7.1 | 8.8 | 670 | 1520 | 2830 | 7.0 | 6.7 | 6.4 |
| | | 25 + 25 + 35 | 2.35 | 2.35 | 3.29 | - | 3.7 | 8.0 | 8.8 | 670 | 1910 | 2830 | 8.8 | 8.4 | 8.0 |
| | | 25 + 25 + 50 | 2.00 | 2.00 | 4.00 | - | 3.7 | 8.0 | 8.8 | 670 | 1910 | 2830 | 8.8 | 8.4 | 8.0 |
| | | 25 + 25 + 60 | 1.82 | 1.82 | 4.36 | - | 3.7 | 8.0 | 8.8 | 670 | 1910 | 2830 | 8.8 | 8.4 | 8.0 |
| | | 25 + 35 + 35 | 2.11 | 2.95 | 2.95 | - | 3.7 | 8.0 | 8.8 | 670 | 1910 | 2830 | 8.8 | 8.4 | 8.0 |
| | | 25 + 35 + 50 | 1.82 | 2.55 | 3.64 | - | 3.7 | 8.0 | 8.8 | 670 | 1910 | 2830 | 8.8 | 8.4 | 8.0 |
| | | 25 + 35 + 60 | 1.67 | 2.33 | 4.00 | - | 3.7 | 8.0 | 8.8 | 670 | 1910 | 2830 | 8.8 | 8.4 | 8.0 |
| | | 25 + 50 + 50 | 1.60 | 3.20 | 3.20 | - | 3.7 | 8.0 | 8.8 | 670 | 1910 | 2830 | 8.8 | 8.4 | 8.0 |
| | | 25 + 50 + 60 | 1.48 | 2.96 | 3.56 | - | 3.7 | 8.0 | 8.8 | 670 | 1910 | 2830 | 8.8 | 8.4 | 8.0 |
| | | 35 + 35 + 35 | 2.67 | 2.67 | 2.67 | - | 3.7 | 8.0 | 8.8 | 670 | 1910 | 2830 | 8.8 | 8.4 | 8.0 |
| | | 35 + 35 + 50 | 2.33 | 2.33 | 3.33 | - | 3.7 | 8.0 | 8.8 | 670 | 1910 | 2830 | 8.8 | 8.4 | 8.0 |
| | | 35 + 35 + 60 | 2.15 | 2.15 | 3.69 | - | 3.7 | 8.0 | 8.8 | 670 | 1910 | 2830 | 8.8 | 8.4 | 8.0 |
| | | 35 + 50 + 50 | 2.07 | 2.96 | 2.96 | - | 3.7 | 8.0 | 8.8 | 670 | 1910 | 2830 | 8.8 | 8.4 | 8.0 |
| | 4 room | 20 + 20 + 20 + 20 | 2.00 | 2.00 | 2.00 | 2.00 | 4.4 | 8.0 | 9.2 | 890 | 1700 | 2830 | 7.8 | 7.5 | 7.2 |
| | | 20 + 20 + 20 + 25 | 1.88 | 1.88 | 1.88 | 2.35 | 4.4 | 8.0 | 9.2 | 890 | 1700 | 2830 | 7.8 | 7.5 | 7.2 |
| | | 20 + 20 + 20 + 35 | 1.68 | 1.68 | 1.68 | 2.95 | 4.4 | 8.0 | 9.2 | 890 | 1700 | 2830 | 7.8 | 7.5 | 7.2 |
| | | 20 + 20 + 20 + 50 | 1.45 | 1.45 | 1.45 | 3.64 | 4.4 | 8.0 | 9.2 | 890 | 1700 | 2830 | 7.8 | 7.5 | 7.2 |
| | | 20 + 20 + 20 + 60 | 1.33 | 1.33 | 1.33 | 4.00 | 4.4 | 8.0 | 9.2 | 890 | 1700 | 2830 | 7.8 | 7.5 | 7.2 |
| | | 20 + 20 + 25 + 25 | 1.78 | 1.78 | 2.22 | 2.22 | 4.4 | 8.0 | 9.2 | 890 | 1700 | 2830 | 7.8 | 7.5 | 7.2 |
| | | 20 + 20 + 25 + 35 | 1.60 | 1.60 | 2.00 | 2.80 | 4.4 | 8.0 | 9.2 | 890 | 1700 | 2830 | 7.8 | 7.5 | 7.2 |
| | | 20 + 20 + 25 + 50 | 1.39 | 1.39 | 1.74 | 3.48 | 4.4 | 8.0 | 9.2 | 890 | 1700 | 2830 | 7.8 | 7.5 | 7.2 |
| | | 20 + 20 + 25 + 60 | 1.28 | 1.28 | 1.60 | 3.84 | 4.4 | 8.0 | 9.2 | 890 | 1700 | 2830 | 7.8 | 7.5 | 7.2 |
| | | 20 + 20 + 35 + 35 | 1.45 | 1.45 | 2.55 | 2.55 | 4.4 | 8.0 | 9.2 | 890 | 1700 | 2830 | 7.8 | 7.5 | 7.2 |
| | | 20 + 20 + 35 + 50 | 1.28 | 1.28 | 2.24 | 3.20 | 4.4 | 8.0 | 9.2 | 890 | 1700 | 2830 | 7.8 | 7.5 | 7.2 |
| | | 20 + 20 + 35 + 60 | 1.19 | 1.19 | 2.07 | 3.56 | 4.4 | 8.0 | 9.2 | 890 | 1700 | 2830 | 7.8 | 7.5 | 7.2 |
| | | 20 + 25 + 25 + 25 | 1.68 | 2.11 | 2.11 | 2.11 | 4.4 | 8.0 | 9.2 | 890 | 1700 | 2830 | 7.8 | 7.5 | 7.2 |
| | | 20 + 25 + 25 + 35 | 1.52 | 1.90 | 1.90 | 2.67 | 4.4 | 8.0 | 9.2 | 890 | 1700 | 2830 | 7.8 | 7.5 | 7.2 |
| | | 20 + 25 + 25 + 50 | 1.33 | 1.67 | 1.67 | 3.33 | 4.4 | 8.0 | 9.2 | 890 | 1700 | 2830 | 7.8 | 7.5 | 7.2 |
| | | 20 + 25 + 25 + 60 | 1.23 | 1.54 | 1.54 | 3.69 | 4.4 | 8.0 | 9.2 | 890 | 1700 | 2830 | 7.8 | 7.5 | 7.2 |
| | | 20 + 25 + 35 + 35 | 1.39 | 1.74 | 2.43 | 2.43 | 4.4 | 8.0 | 9.2 | 890 | 1700 | 2830 | 7.8 | 7.5 | 7.2 |
| | | 20 + 25 + 35 + 50 | 1.23 | 1.54 | 2.15 | 3.08 | 4.4 | 8.0 | 9.2 | 890 | 1700 | 2830 | 7.8 | 7.5 | 7.2 |
| | | 20 + 35 + 35 + 35 | 1.28 | 2.24 | 2.24 | 2.24 | 4.4 | 8.0 | 9.2 | 890 | 1700 | 2830 | 7.8 | 7.5 | 7.2 |
| | | 25 + 25 + 25 + 25 | 2.00 | 2.00 | 2.00 | 2.00 | 4.4 | 8.0 | 9.2 | 890 | 1700 | 2830 | 7.8 | 7.5 | 7.2 |
| | | 25 + 25 + 25 + 35 | 1.82 | 1.82 | 1.82 | 2.55 | 4.4 | 8.0 | 9.2 | 890 | 1700 | 2830 | 7.8 | 7.5 | 7.2 |
| | | 25 + 25 + 25 + 50 | 1.60 | 1.60 | 1.60 | 3.20 | 4.4 | 8.0 | 9.2 | 890 | 1700 | 2830 | 7.8 | 7.5 | 7.2 |
| | | 25 + 25 + 25 + 60 | 1.48 | 1.48 | 1.48 | 3.56 | 4.4 | 8.0 | 9.2 | 890 | 1700 | 2830 | 7.8 | 7.5 | 7.2 |
| | | 25 + 25 + 35 + 35 | 1.67 | 1.67 | 2.33 | 2.33 | 4.4 | 8.0 | 9.2 | 890 | 1700 | 2830 | 7.8 | 7.5 | 7.2 |
| | | 25 + 25 + 35 + 50 | 1.48 | 1.48 | 2.07 | 2.96 | 4.4 | 8.0 | 9.2 | 890 | 1700 | 2830 | 7.8 | 7.5 | 7.2 |
| | | 25 + 35 + 35 + 35 | 1.54 | 2.15 | 2.15 | 2.15 | 4.4 | 8.0 | 9.2 | 890 | 1700 | 2830 | 7.8 | 7.5 | 7.2 |

## SCM80ZS-W Table of Indoor unit combination with other indoor unit

| Indoor unit combination | | | Heating capacity (kW) | | | | | | | Power consumption(W) | | | Standard current(A) | | |
|---|---|---|---|---|---|---|---|---|---|---|---|---|---|---|---|
| | | | Room heating capacity | | | | Total capacity | | | | | | | | |
| | | | A | B | C | D | Min. | Standard | Max. | Min. | Standard | Max. | 220V | 230V | 240V |
| Heating operation | 1 room | 20 | 3.00 | - | - | - | 1.1 | 3.0 | 3.5 | 390 | 1060 | 1330 | 5.0 | 4.8 | 4.6 |
| | | 25 | 3.40 | - | - | - | 1.1 | 3.4 | 4.0 | 390 | 1220 | 1510 | 5.7 | 5.5 | 5.2 |
| | | 35 | 4.50 | - | - | - | 1.1 | 4.5 | 4.8 | 390 | 1510 | 1790 | 7.0 | 6.7 | 6.4 |
| | | 50 | 5.80 | - | - | - | 1.1 | 5.8 | 6.2 | 390 | 1950 | 2310 | 9.0 | 8.7 | 8.3 |
| | | 60 | 6.80 | - | - | - | 1.1 | 6.8 | 7.1 | 390 | 2240 | 2660 | 10.4 | 9.9 | 9.5 |
| | | 71 | 8.00 | - | - | - | 1.1 | 8.0 | 8.1 | 390 | 2740 | 3120 | 12.7 | 12.2 | 11.6 |
| | 2 room | 20 + 20 | 2.70 | 2.70 | - | - | 1.5 | 5.4 | 7.0 | 350 | 1370 | 1870 | 6.4 | 6.1 | 5.9 |
| | | 20 + 25 | 2.62 | 3.28 | - | - | 1.5 | 5.9 | 7.3 | 350 | 1560 | 2130 | 7.3 | 6.9 | 6.7 |
| | | 20 + 35 | 2.51 | 4.39 | - | - | 1.5 | 6.9 | 7.9 | 350 | 1930 | 2650 | 9.0 | 8.6 | 8.2 |
| | | 20 + 50 | 2.46 | 6.14 | - | - | 1.5 | 8.6 | 9.4 | 350 | 2460 | 3120 | 11.4 | 10.9 | 10.5 |
| | | 20 + 60 | 2.33 | 6.98 | - | - | 1.5 | 9.3 | 9.4 | 350 | 2650 | 3120 | 12.3 | 11.8 | 11.3 |
| | | 20 + 71 | 2.04 | 7.26 | - | - | 1.5 | 9.3 | 9.4 | 350 | 2650 | 3120 | 12.3 | 11.8 | 11.3 |
| | | 25 + 25 | 3.20 | 3.20 | - | - | 1.5 | 6.4 | 7.7 | 350 | 1740 | 2480 | 8.1 | 7.7 | 7.4 |
| | | 25 + 35 | 3.08 | 4.32 | - | - | 1.5 | 7.4 | 8.2 | 350 | 2130 | 2910 | 9.9 | 9.4 | 9.1 |
| | | 25 + 50 | 2.87 | 5.73 | - | - | 1.5 | 8.6 | 9.4 | 350 | 2460 | 3120 | 11.4 | 10.9 | 10.5 |
| | | 25 + 60 | 2.74 | 6.56 | - | - | 1.5 | 9.3 | 9.4 | 350 | 2650 | 3120 | 12.3 | 11.8 | 11.3 |
| | | 25 + 71 | 2.42 | 6.88 | - | - | 1.5 | 9.3 | 9.4 | 350 | 2650 | 3120 | 12.3 | 11.8 | 11.3 |
| | | 35 + 35 | 4.30 | 4.30 | - | - | 1.5 | 8.6 | 9.4 | 350 | 2460 | 3120 | 11.4 | 10.9 | 10.5 |
| | | 35 + 50 | 3.83 | 5.47 | - | - | 1.5 | 9.3 | 9.4 | 350 | 2650 | 3120 | 12.3 | 11.8 | 11.3 |
| | | 35 + 60 | 3.43 | 5.87 | - | - | 1.5 | 9.3 | 9.4 | 350 | 2650 | 3120 | 12.3 | 11.8 | 11.3 |
| | | 35 + 71 | 3.07 | 6.23 | - | - | 1.5 | 9.3 | 9.4 | 350 | 2650 | 3120 | 12.3 | 11.8 | 11.3 |
| | | 50 + 50 | 4.65 | 4.65 | - | - | 1.5 | 9.3 | 9.4 | 350 | 2650 | 3120 | 12.3 | 11.8 | 11.3 |
| | | 50 + 60 | 4.23 | 5.07 | - | - | 1.5 | 9.3 | 9.4 | 350 | 2650 | 3120 | 12.3 | 11.8 | 11.3 |
| | | 50 + 71 | 3.84 | 5.46 | - | - | 1.5 | 9.3 | 9.4 | 350 | 2650 | 3120 | 12.3 | 11.8 | 11.3 |
| | | 60 + 60 | 4.65 | 4.65 | - | - | 1.5 | 9.3 | 9.4 | 350 | 2650 | 3120 | 12.3 | 11.8 | 11.3 |
| | | 60 + 71 | 4.26 | 5.04 | - | - | 1.5 | 9.3 | 9.4 | 350 | 2650 | 3120 | 12.3 | 11.8 | 11.3 |
| | 3 room | 20 + 20 + 20 | 2.57 | 2.57 | 2.57 | - | 1.6 | 7.7 | 9.5 | 370 | 1870 | 3120 | 8.7 | 8.3 | 8.0 |
| | | 20 + 20 + 25 | 2.46 | 2.46 | 3.08 | - | 1.6 | 8.0 | 9.5 | 370 | 1970 | 3120 | 9.1 | 8.7 | 8.4 |
| | | 20 + 20 + 35 | 2.29 | 2.29 | 4.01 | - | 1.6 | 8.6 | 9.5 | 370 | 2410 | 3120 | 11.2 | 10.7 | 10.2 |
| | | 20 + 20 + 50 | 2.07 | 2.07 | 5.17 | - | 1.6 | 9.3 | 9.5 | 370 | 2600 | 3120 | 12.1 | 11.5 | 11.1 |
| | | 20 + 20 + 60 | 1.86 | 1.86 | 5.58 | - | 1.6 | 9.3 | 9.5 | 370 | 2600 | 3120 | 12.1 | 11.5 | 11.1 |
| | | 20 + 20 + 71 | 1.68 | 1.68 | 5.95 | - | 1.6 | 9.3 | 9.5 | 370 | 2600 | 3120 | 12.1 | 11.5 | 11.1 |
| | | 20 + 25 + 25 | 2.46 | 3.07 | 3.07 | - | 1.6 | 8.6 | 9.5 | 370 | 2410 | 3120 | 11.2 | 10.7 | 10.2 |
| | | 20 + 25 + 35 | 2.33 | 2.91 | 4.07 | - | 1.6 | 9.3 | 9.5 | 370 | 2600 | 3120 | 12.1 | 11.5 | 11.1 |
| | | 20 + 25 + 50 | 1.96 | 2.45 | 4.89 | - | 1.6 | 9.3 | 9.5 | 370 | 2600 | 3120 | 12.1 | 11.5 | 11.1 |
| | | 20 + 25 + 60 | 1.77 | 2.21 | 5.31 | - | 1.6 | 9.3 | 9.5 | 370 | 2600 | 3120 | 12.1 | 11.5 | 11.1 |
| | | 20 + 25 + 71 | 1.60 | 2.00 | 5.69 | - | 1.6 | 9.3 | 9.5 | 370 | 2600 | 3120 | 12.1 | 11.5 | 11.1 |
| | | 20 + 35 + 35 | 2.07 | 3.62 | 3.62 | - | 1.6 | 9.3 | 9.5 | 370 | 2600 | 3120 | 12.1 | 11.5 | 11.1 |
| | | 20 + 35 + 50 | 1.77 | 3.10 | 4.43 | - | 1.6 | 9.3 | 9.5 | 370 | 2600 | 3120 | 12.1 | 11.5 | 11.1 |
| | | 20 + 35 + 60 | 1.62 | 2.83 | 4.85 | - | 1.6 | 9.3 | 9.5 | 370 | 2600 | 3120 | 12.1 | 11.5 | 11.1 |
| | | 20 + 35 + 71 | 1.48 | 2.58 | 5.24 | - | 1.6 | 9.3 | 9.5 | 370 | 2600 | 3120 | 12.1 | 11.5 | 11.1 |
| | | 20 + 50 + 50 | 1.55 | 3.88 | 3.88 | - | 1.6 | 9.3 | 9.5 | 370 | 2600 | 3120 | 12.1 | 11.5 | 11.1 |
| | | 20 + 50 + 60 | 1.43 | 3.58 | 4.29 | - | 1.6 | 9.3 | 9.5 | 370 | 2600 | 3120 | 12.1 | 11.5 | 11.1 |
| | | 25 + 25 + 25 | 2.87 | 2.87 | 2.87 | - | 1.6 | 8.6 | 9.5 | 370 | 2410 | 3120 | 11.2 | 10.7 | 10.2 |
| | | 25 + 25 + 35 | 2.74 | 2.74 | 3.83 | - | 1.6 | 9.3 | 9.5 | 370 | 2600 | 3120 | 12.1 | 11.5 | 11.1 |
| | | 25 + 25 + 50 | 2.33 | 2.33 | 4.65 | - | 1.6 | 9.3 | 9.5 | 370 | 2600 | 3120 | 12.1 | 11.5 | 11.1 |
| | | 25 + 25 + 60 | 2.11 | 2.11 | 5.07 | - | 1.6 | 9.3 | 9.5 | 370 | 2600 | 3120 | 12.1 | 11.5 | 11.1 |
| | | 25 + 25 + 71 | 1.92 | 1.92 | 5.46 | - | 1.6 | 9.3 | 9.5 | 370 | 2600 | 3120 | 12.1 | 11.5 | 11.1 |
| | | 25 + 35 + 35 | 2.45 | 3.43 | 3.43 | - | 1.6 | 9.3 | 9.5 | 370 | 2600 | 3120 | 12.1 | 11.5 | 11.1 |
| | | 25 + 35 + 50 | 2.11 | 2.96 | 4.23 | - | 1.6 | 9.3 | 9.5 | 370 | 2600 | 3120 | 12.1 | 11.5 | 11.1 |
| | | 25 + 35 + 60 | 1.94 | 2.71 | 4.65 | - | 1.6 | 9.3 | 9.5 | 370 | 2600 | 3120 | 12.1 | 11.5 | 11.1 |
| | | 25 + 35 + 71 | 1.77 | 2.48 | 5.04 | - | 1.6 | 9.3 | 9.5 | 370 | 2600 | 3120 | 12.1 | 11.5 | 11.1 |
| | | 25 + 50 + 50 | 1.86 | 3.72 | 3.72 | - | 1.6 | 9.3 | 9.5 | 370 | 2600 | 3120 | 12.1 | 11.5 | 11.1 |
| | | 25 + 50 + 60 | 1.72 | 3.44 | 4.13 | - | 1.6 | 9.3 | 9.5 | 370 | 2600 | 3120 | 12.1 | 11.5 | 11.1 |
| | | 35 + 35 + 35 | 3.10 | 3.10 | 3.10 | - | 1.6 | 9.3 | 9.5 | 370 | 2600 | 3120 | 12.1 | 11.5 | 11.1 |
| | | 35 + 35 + 50 | 2.71 | 2.71 | 3.88 | - | 1.6 | 9.3 | 9.5 | 370 | 2600 | 3120 | 12.1 | 11.5 | 11.1 |
| | | 35 + 35 + 60 | 2.50 | 2.50 | 4.29 | - | 1.6 | 9.3 | 9.5 | 370 | 2600 | 3120 | 12.1 | 11.5 | 11.1 |
| | | 35 + 50 + 50 | 2.41 | 3.44 | 3.44 | - | 1.6 | 9.3 | 9.5 | 370 | 2600 | 3120 | 12.1 | 11.5 | 11.1 |
| | 4 room | 20 + 20 + 20 + 20 | 2.33 | 2.33 | 2.33 | 2.33 | 1.7 | 9.3 | 9.6 | 350 | 2170 | 3120 | 10.1 | 9.6 | 9.2 |
| | | 20 + 20 + 20 + 25 | 2.19 | 2.19 | 2.19 | 2.74 | 1.7 | 9.3 | 9.6 | 350 | 2170 | 3120 | 10.1 | 9.6 | 9.2 |
| | | 20 + 20 + 20 + 35 | 1.96 | 1.96 | 1.96 | 3.43 | 1.7 | 9.3 | 9.6 | 350 | 2170 | 3120 | 10.1 | 9.6 | 9.2 |
| | | 20 + 20 + 20 + 50 | 1.69 | 1.69 | 1.69 | 4.23 | 1.7 | 9.3 | 9.6 | 350 | 2170 | 3120 | 10.1 | 9.6 | 9.2 |
| | | 20 + 20 + 20 + 60 | 1.55 | 1.55 | 1.55 | 4.65 | 1.7 | 9.3 | 9.6 | 350 | 2170 | 3120 | 10.1 | 9.6 | 9.2 |
| | | 20 + 20 + 25 + 25 | 2.07 | 2.07 | 2.58 | 2.58 | 1.7 | 9.3 | 9.6 | 350 | 2170 | 3120 | 10.1 | 9.6 | 9.2 |
| | | 20 + 20 + 25 + 35 | 1.86 | 1.86 | 2.33 | 3.26 | 1.7 | 9.3 | 9.6 | 350 | 2170 | 3120 | 10.1 | 9.6 | 9.2 |
| | | 20 + 20 + 25 + 50 | 1.62 | 1.62 | 2.02 | 4.04 | 1.7 | 9.3 | 9.6 | 350 | 2170 | 3120 | 10.1 | 9.6 | 9.2 |
| | | 20 + 20 + 25 + 60 | 1.49 | 1.49 | 1.86 | 4.46 | 1.7 | 9.3 | 9.6 | 350 | 2170 | 3120 | 10.1 | 9.6 | 9.2 |
| | | 20 + 20 + 35 + 35 | 1.69 | 1.69 | 2.96 | 2.96 | 1.7 | 9.3 | 9.6 | 350 | 2170 | 3120 | 10.1 | 9.6 | 9.2 |
| | | 20 + 20 + 35 + 50 | 1.49 | 1.49 | 2.60 | 3.72 | 1.7 | 9.3 | 9.6 | 350 | 2170 | 3120 | 10.1 | 9.6 | 9.2 |
| | | 20 + 20 + 35 + 60 | 1.38 | 1.38 | 2.41 | 4.13 | 1.7 | 9.3 | 9.6 | 350 | 2170 | 3120 | 10.1 | 9.6 | 9.2 |
| | | 20 + 25 + 25 + 25 | 1.96 | 2.45 | 2.45 | 2.45 | 1.7 | 9.3 | 9.6 | 350 | 2170 | 3120 | 10.1 | 9.6 | 9.2 |
| | | 20 + 25 + 25 + 35 | 1.77 | 2.21 | 2.21 | 3.10 | 1.7 | 9.3 | 9.6 | 350 | 2170 | 3120 | 10.1 | 9.6 | 9.2 |
| | | 20 + 25 + 25 + 50 | 1.55 | 1.94 | 1.94 | 3.88 | 1.7 | 9.3 | 9.6 | 350 | 2170 | 3120 | 10.1 | 9.6 | 9.2 |
| | | 20 + 25 + 25 + 60 | 1.43 | 1.79 | 1.79 | 4.29 | 1.7 | 9.3 | 9.6 | 350 | 2170 | 3120 | 10.1 | 9.6 | 9.2 |
| | | 20 + 25 + 35 + 35 | 1.62 | 2.02 | 2.83 | 2.83 | 1.7 | 9.3 | 9.6 | 350 | 2170 | 3120 | 10.1 | 9.6 | 9.2 |

# MULTI-SPLIT SYSTEM

| Indoor unit combination | | | Heating capacity (kW) | | | | | | | Power consumption(W) | | | Standard current(A) | | |
|---|---|---|---|---|---|---|---|---|---|---|---|---|---|---|---|
| | | | Room heating capacity | | | | Total capacity | | | | | | | | |
| | | | A | B | C | D | Min. | Standard | Max. | Min. | Standard | Max. | 220V | 230V | 240V |
| Heating operation | 4 room | 20 + 25 + 35 + 50 | 1.43 | 1.79 | 2.50 | 3.58 | 1.7 | 9.3 | 9.6 | 350 | 2170 | 3120 | 10.1 | 9.6 | 9.2 |
| | | 20 + 35 + 35 + 35 | 1.49 | 2.60 | 2.60 | 2.60 | 1.7 | 9.3 | 9.6 | 350 | 2170 | 3120 | 10.1 | 9.6 | 9.2 |
| | | 25 + 25 + 25 + 25 | 2.33 | 2.33 | 2.33 | 2.33 | 1.7 | 9.3 | 9.6 | 350 | 2170 | 3120 | 10.1 | 9.6 | 9.2 |
| | | 25 + 25 + 25 + 35 | 2.11 | 2.11 | 2.11 | 2.96 | 1.7 | 9.3 | 9.6 | 350 | 2170 | 3120 | 10.1 | 9.6 | 9.2 |
| | | 25 + 25 + 25 + 50 | 1.86 | 1.86 | 1.86 | 3.72 | 1.7 | 9.3 | 9.6 | 350 | 2170 | 3120 | 10.1 | 9.6 | 9.2 |
| | | 25 + 25 + 25 + 60 | 1.72 | 1.72 | 1.72 | 4.13 | 1.7 | 9.3 | 9.6 | 350 | 2170 | 3120 | 10.1 | 9.6 | 9.2 |
| | | 25 + 25 + 35 + 35 | 1.94 | 1.94 | 2.71 | 2.71 | 1.7 | 9.3 | 9.6 | 350 | 2170 | 3120 | 10.1 | 9.6 | 9.2 |
| | | 25 + 25 + 35 + 50 | 1.72 | 1.72 | 2.41 | 3.44 | 1.7 | 9.3 | 9.6 | 350 | 2170 | 3120 | 10.1 | 9.6 | 9.2 |
| | | 25 + 35 + 35 + 35 | 1.79 | 2.50 | 2.50 | 2.50 | 1.7 | 9.3 | 9.6 | 350 | 2170 | 3120 | 10.1 | 9.6 | 9.2 |

| Indoor unit combination | | | Cooling capacity (kW) | | | | | | | Power consumption(W) | | | Standard current(A) | | |
|---|---|---|---|---|---|---|---|---|---|---|---|---|---|---|---|
| | | | Room cooling capacity | | | | Total capacity | | | | | | | | |
| | | | A | B | C | D | Min. | Standard | Max. | Min. | Standard | Max. | 220V | 230V | 240V |
| Cooling operation | 1 room | 20 | 2.00 | - | - | - | 1.8 | 2.0 | 2.7 | 480 | 530 | 950 | 2.5 | 2.4 | 2.3 |
| | | 25 | 2.50 | - | - | - | 1.8 | 2.5 | 3.2 | 480 | 730 | 1080 | 3.5 | 3.3 | 3.2 |
| | | 35 | 3.50 | - | - | - | 1.8 | 3.5 | 3.7 | 480 | 1120 | 1240 | 5.2 | 5.0 | 4.8 |
| | | 50 | 5.00 | - | - | - | 1.8 | 5.0 | 5.8 | 480 | 1710 | 2100 | 7.9 | 7.5 | 7.2 |
| | | 60 | 6.00 | - | - | - | 1.8 | 6.0 | 6.7 | 480 | 2140 | 2700 | 9.8 | 9.4 | 9.0 |
| | | 71 | 7.10 | - | - | - | 1.8 | 7.1 | 7.2 | 480 | 2430 | 2830 | 11.2 | 10.7 | 10.2 |
| | 2 room | 20 + 20 | 2.00 | 2.00 | - | - | 3.0 | 4.0 | 5.8 | 550 | 930 | 1910 | 4.4 | 4.2 | 4.0 |
| | | 20 + 25 | 2.00 | 2.50 | - | - | 3.0 | 4.5 | 6.1 | 550 | 1170 | 2060 | 5.5 | 5.2 | 5.0 |
| | | 20 + 35 | 2.00 | 3.50 | - | - | 3.0 | 5.5 | 6.6 | 550 | 1590 | 2320 | 7.3 | 7.0 | 6.7 |
| | | 20 + 50 | 2.03 | 5.07 | - | - | 3.0 | 7.1 | 8.3 | 550 | 2340 | 2830 | 10.7 | 10.3 | 9.8 |
| | | 20 + 60 | 2.00 | 6.00 | - | - | 3.0 | 8.0 | 8.3 | 550 | 2720 | 2830 | 12.5 | 11.9 | 11.4 |
| | | 20 + 71 | 1.76 | 6.24 | - | - | 3.0 | 8.0 | 8.3 | 550 | 2720 | 2830 | 12.5 | 11.9 | 11.4 |
| | | 25 + 25 | 2.50 | 2.50 | - | - | 3.0 | 5.0 | 6.5 | 550 | 1360 | 2270 | 6.3 | 6.0 | 5.8 |
| | | 25 + 35 | 2.46 | 3.44 | - | - | 3.0 | 5.9 | 6.8 | 550 | 1780 | 2470 | 8.2 | 7.8 | 7.5 |
| | | 25 + 50 | 2.47 | 4.93 | - | - | 3.0 | 7.4 | 8.3 | 550 | 2430 | 2830 | 11.2 | 10.7 | 10.2 |
| | | 25 + 60 | 2.35 | 5.65 | - | - | 3.0 | 8.0 | 8.3 | 550 | 2720 | 2830 | 12.5 | 11.9 | 11.4 |
| | | 25 + 71 | 2.08 | 5.92 | - | - | 3.0 | 8.0 | 8.3 | 550 | 2720 | 2830 | 12.5 | 11.9 | 11.4 |
| | | 35 + 35 | 3.55 | 3.55 | - | - | 3.0 | 7.1 | 8.3 | 550 | 2340 | 2830 | 10.7 | 10.3 | 9.8 |
| | | 35 + 50 | 3.29 | 4.71 | - | - | 3.0 | 8.0 | 8.3 | 550 | 2720 | 2830 | 12.5 | 11.9 | 11.4 |
| | | 35 + 60 | 2.95 | 5.05 | - | - | 3.0 | 8.0 | 8.3 | 550 | 2720 | 2830 | 12.5 | 11.9 | 11.4 |
| | | 35 + 71 | 2.64 | 5.36 | - | - | 3.0 | 8.0 | 8.3 | 550 | 2720 | 2830 | 12.5 | 11.9 | 11.4 |
| | | 50 + 50 | 4.00 | 4.00 | - | - | 3.0 | 8.0 | 8.3 | 550 | 2720 | 2830 | 12.5 | 11.9 | 11.4 |
| | | 50 + 60 | 3.64 | 4.36 | - | - | 3.0 | 8.0 | 8.3 | 550 | 2720 | 2830 | 12.5 | 11.9 | 11.4 |
| | | 50 + 71 | 3.31 | 4.69 | - | - | 3.0 | 8.0 | 8.3 | 550 | 2720 | 2830 | 12.5 | 11.9 | 11.4 |
| | | 60 + 60 | 4.00 | 4.00 | - | - | 3.0 | 8.0 | 8.3 | 550 | 2720 | 2830 | 12.5 | 11.9 | 11.4 |
| | | 60 + 71 | 3.66 | 4.34 | - | - | 3.0 | 8.0 | 8.3 | 550 | 2720 | 2830 | 12.5 | 11.9 | 11.4 |
| | 3 room | 20 + 20 + 20 | 2.00 | 2.00 | 2.00 | - | 3.7 | 6.0 | 8.5 | 670 | 1440 | 2830 | 6.6 | 6.4 | 6.1 |
| | | 20 + 20 + 25 | 2.00 | 2.00 | 2.50 | - | 3.7 | 6.5 | 8.5 | 670 | 1630 | 2830 | 7.5 | 7.2 | 6.9 |
| | | 20 + 20 + 35 | 1.89 | 1.89 | 3.31 | - | 3.7 | 7.1 | 8.5 | 670 | 1870 | 2830 | 8.6 | 8.2 | 7.9 |
| | | 20 + 20 + 50 | 1.78 | 1.78 | 4.44 | - | 3.7 | 8.0 | 8.5 | 670 | 2290 | 2830 | 10.5 | 10.1 | 9.6 |
| | | 20 + 20 + 60 | 1.60 | 1.60 | 4.80 | - | 3.7 | 8.0 | 8.5 | 670 | 2290 | 2830 | 10.5 | 10.1 | 9.6 |
| | | 20 + 20 + 71 | 1.44 | 1.44 | 5.12 | - | 3.7 | 8.0 | 8.5 | 670 | 2290 | 2830 | 10.5 | 10.1 | 9.6 |
| | | 20 + 25 + 25 | 2.03 | 2.54 | 2.54 | - | 3.7 | 7.1 | 8.5 | 670 | 1870 | 2830 | 8.6 | 8.2 | 7.9 |
| | | 20 + 25 + 35 | 2.00 | 2.50 | 3.50 | - | 3.7 | 8.0 | 8.5 | 670 | 2290 | 2830 | 10.5 | 10.1 | 9.6 |
| | | 20 + 25 + 50 | 1.68 | 2.11 | 4.21 | - | 3.7 | 8.0 | 8.5 | 670 | 2290 | 2830 | 10.5 | 10.1 | 9.6 |
| | | 20 + 25 + 60 | 1.52 | 1.90 | 4.57 | - | 3.7 | 8.0 | 8.5 | 670 | 2290 | 2830 | 10.5 | 10.1 | 9.6 |
| | | 20 + 25 + 71 | 1.38 | 1.72 | 4.90 | - | 3.7 | 8.0 | 8.5 | 670 | 2290 | 2830 | 10.5 | 10.1 | 9.6 |
| | | 20 + 35 + 35 | 1.78 | 3.11 | 3.11 | - | 3.7 | 8.0 | 8.5 | 670 | 2290 | 2830 | 10.5 | 10.1 | 9.6 |
| | | 20 + 35 + 50 | 1.52 | 2.67 | 3.81 | - | 3.7 | 8.0 | 8.5 | 670 | 2290 | 2830 | 10.5 | 10.1 | 9.6 |
| | | 20 + 35 + 60 | 1.39 | 2.43 | 4.17 | - | 3.7 | 8.0 | 8.5 | 670 | 2290 | 2830 | 10.5 | 10.1 | 9.6 |
| | | 20 + 35 + 71 | 1.27 | 2.22 | 4.51 | - | 3.7 | 8.0 | 8.5 | 670 | 2290 | 2830 | 10.5 | 10.1 | 9.6 |
| | | 20 + 50 + 50 | 1.33 | 3.33 | 3.33 | - | 3.7 | 8.0 | 8.5 | 670 | 2290 | 2830 | 10.5 | 10.1 | 9.6 |
| | | 20 + 50 + 60 | 1.23 | 3.08 | 3.69 | - | 3.7 | 8.0 | 8.5 | 670 | 2290 | 2830 | 10.5 | 10.1 | 9.6 |
| | | 25 + 25 + 25 | 2.37 | 2.37 | 2.37 | - | 3.7 | 7.1 | 8.5 | 670 | 1870 | 2830 | 8.6 | 8.2 | 7.9 |
| | | 25 + 25 + 35 | 2.35 | 2.35 | 3.29 | - | 3.7 | 8.0 | 8.5 | 670 | 2290 | 2830 | 10.5 | 10.1 | 9.6 |
| | | 25 + 25 + 50 | 2.00 | 2.00 | 4.00 | - | 3.7 | 8.0 | 8.5 | 670 | 2290 | 2830 | 10.5 | 10.1 | 9.6 |
| | | 25 + 25 + 60 | 1.82 | 1.82 | 4.36 | - | 3.7 | 8.0 | 8.5 | 670 | 2290 | 2830 | 10.5 | 10.1 | 9.6 |
| | | 25 + 25 + 71 | 1.65 | 1.65 | 4.69 | - | 3.7 | 8.0 | 8.5 | 670 | 2290 | 2830 | 10.5 | 10.1 | 9.6 |
| | | 25 + 35 + 35 | 2.11 | 2.95 | 2.95 | - | 3.7 | 8.0 | 8.5 | 670 | 2290 | 2830 | 10.5 | 10.1 | 9.6 |
| | | 25 + 35 + 50 | 1.82 | 2.55 | 3.64 | - | 3.7 | 8.0 | 8.5 | 670 | 2290 | 2830 | 10.5 | 10.1 | 9.6 |
| | | 25 + 35 + 60 | 1.67 | 2.33 | 4.00 | - | 3.7 | 8.0 | 8.5 | 670 | 2290 | 2830 | 10.5 | 10.1 | 9.6 |
| | | 25 + 35 + 71 | 1.53 | 2.14 | 4.34 | - | 3.7 | 8.0 | 8.5 | 670 | 2290 | 2830 | 10.5 | 10.1 | 9.6 |
| | | 25 + 50 + 50 | 1.60 | 3.20 | 3.20 | - | 3.7 | 8.0 | 8.5 | 670 | 2290 | 2830 | 10.5 | 10.1 | 9.6 |
| | | 25 + 50 + 60 | 1.48 | 2.96 | 3.56 | - | 3.7 | 8.0 | 8.5 | 670 | 2290 | 2830 | 10.5 | 10.1 | 9.6 |
| | | 35 + 35 + 35 | 2.67 | 2.67 | 2.67 | - | 3.7 | 8.0 | 8.5 | 670 | 2290 | 2830 | 10.5 | 10.1 | 9.6 |
| | | 35 + 35 + 50 | 2.33 | 2.33 | 3.33 | - | 3.7 | 8.0 | 8.5 | 670 | 2290 | 2830 | 10.5 | 10.1 | 9.6 |
| | | 35 + 35 + 60 | 2.15 | 2.15 | 3.69 | - | 3.7 | 8.0 | 8.5 | 670 | 2290 | 2830 | 10.5 | 10.1 | 9.6 |
| | | 35 + 50 + 50 | 2.07 | 2.96 | 2.96 | - | 3.7 | 8.0 | 8.5 | 670 | 2290 | 2830 | 10.5 | 10.1 | 9.6 |
| | 4 room | 20 + 20 + 20 + 20 | 2.00 | 2.00 | 2.00 | 2.00 | 4.4 | 8.0 | 8.7 | 890 | 2170 | 2830 | 10.0 | 9.5 | 9.1 |
| | | 20 + 20 + 20 + 25 | 1.88 | 1.88 | 1.88 | 2.35 | 4.4 | 8.0 | 8.7 | 890 | 2170 | 2830 | 10.0 | 9.5 | 9.1 |
| | | 20 + 20 + 20 + 35 | 1.68 | 1.68 | 1.68 | 2.95 | 4.4 | 8.0 | 8.7 | 890 | 2170 | 2830 | 10.0 | 9.5 | 9.1 |
| | | 20 + 20 + 20 + 50 | 1.45 | 1.45 | 1.45 | 3.64 | 4.4 | 8.0 | 8.7 | 890 | 2170 | 2830 | 10.0 | 9.5 | 9.1 |

| Indoor unit combination | | | Cooling capacity (kW) | | | | | | | Power consumption(W) | | | Standard current(A) | | |
|---|---|---|---|---|---|---|---|---|---|---|---|---|---|---|---|
| | | | Room cooling capacity | | | | Total capacity | | | | | | | | |
| | | | A | B | C | D | Min. | Standard | Max. | Min. | Standard | Max. | 220V | 230V | 240V |
| Cooling operation | 4 room | 20 + 20 + 20 + 60 | 1.33 | 1.33 | 1.33 | 4.00 | 4.4 | 8.0 | 8.7 | 890 | 2170 | 2830 | 10.0 | 9.5 | 9.1 |
| | | 20 + 20 + 25 + 25 | 1.78 | 1.78 | 2.22 | 2.22 | 4.4 | 8.0 | 8.7 | 890 | 2170 | 2830 | 10.0 | 9.5 | 9.1 |
| | | 20 + 20 + 25 + 35 | 1.60 | 1.60 | 2.00 | 2.80 | 4.4 | 8.0 | 8.7 | 890 | 2170 | 2830 | 10.0 | 9.5 | 9.1 |
| | | 20 + 20 + 25 + 50 | 1.39 | 1.39 | 1.74 | 3.48 | 4.4 | 8.0 | 8.7 | 890 | 2170 | 2830 | 10.0 | 9.5 | 9.1 |
| | | 20 + 20 + 25 + 60 | 1.28 | 1.28 | 1.60 | 3.84 | 4.4 | 8.0 | 8.7 | 890 | 2170 | 2830 | 10.0 | 9.5 | 9.1 |
| | | 20 + 20 + 35 + 35 | 1.45 | 1.45 | 2.55 | 2.55 | 4.4 | 8.0 | 8.7 | 890 | 2170 | 2830 | 10.0 | 9.5 | 9.1 |
| | | 20 + 20 + 35 + 50 | 1.28 | 1.28 | 2.24 | 3.20 | 4.4 | 8.0 | 8.7 | 890 | 2170 | 2830 | 10.0 | 9.5 | 9.1 |
| | | 20 + 20 + 35 + 60 | 1.19 | 1.19 | 2.07 | 3.56 | 4.4 | 8.0 | 8.7 | 890 | 2170 | 2830 | 10.0 | 9.5 | 9.1 |
| | | 20 + 25 + 25 + 25 | 1.68 | 2.11 | 2.11 | 2.11 | 4.4 | 8.0 | 8.7 | 890 | 2170 | 2830 | 10.0 | 9.5 | 9.1 |
| | | 20 + 25 + 25 + 35 | 1.52 | 1.90 | 1.90 | 2.67 | 4.4 | 8.0 | 8.7 | 890 | 2170 | 2830 | 10.0 | 9.5 | 9.1 |
| | | 20 + 25 + 25 + 50 | 1.33 | 1.67 | 1.67 | 3.33 | 4.4 | 8.0 | 8.7 | 890 | 2170 | 2830 | 10.0 | 9.5 | 9.1 |
| | | 20 + 25 + 25 + 60 | 1.23 | 1.54 | 1.54 | 3.69 | 4.4 | 8.0 | 8.7 | 890 | 2170 | 2830 | 10.0 | 9.5 | 9.1 |
| | | 20 + 25 + 35 + 35 | 1.39 | 1.74 | 2.43 | 2.43 | 4.4 | 8.0 | 8.7 | 890 | 2170 | 2830 | 10.0 | 9.5 | 9.1 |
| | | 20 + 25 + 35 + 50 | 1.23 | 1.54 | 2.15 | 3.08 | 4.4 | 8.0 | 8.7 | 890 | 2170 | 2830 | 10.0 | 9.5 | 9.1 |
| | | 20 + 35 + 35 + 35 | 1.28 | 2.24 | 2.24 | 2.24 | 4.4 | 8.0 | 8.7 | 890 | 2170 | 2830 | 10.0 | 9.5 | 9.1 |
| | | 25 + 25 + 25 + 25 | 2.00 | 2.00 | 2.00 | 2.00 | 4.4 | 8.0 | 8.7 | 890 | 2170 | 2830 | 10.0 | 9.5 | 9.1 |
| | | 25 + 25 + 25 + 35 | 1.82 | 1.82 | 1.82 | 2.55 | 4.4 | 8.0 | 8.7 | 890 | 2170 | 2830 | 10.0 | 9.5 | 9.1 |
| | | 25 + 25 + 25 + 50 | 1.60 | 1.60 | 1.60 | 3.20 | 4.4 | 8.0 | 8.7 | 890 | 2170 | 2830 | 10.0 | 9.5 | 9.1 |
| | | 25 + 25 + 25 + 60 | 1.48 | 1.48 | 1.48 | 3.56 | 4.4 | 8.0 | 8.7 | 890 | 2170 | 2830 | 10.0 | 9.5 | 9.1 |
| | | 25 + 25 + 35 + 35 | 1.67 | 1.67 | 2.33 | 2.33 | 4.4 | 8.0 | 8.7 | 890 | 2170 | 2830 | 10.0 | 9.5 | 9.1 |
| | | 25 + 25 + 35 + 50 | 1.48 | 1.48 | 2.07 | 2.96 | 4.4 | 8.0 | 8.7 | 890 | 2170 | 2830 | 10.0 | 9.5 | 9.1 |
| | | 25 + 35 + 35 + 35 | 1.54 | 2.15 | 2.15 | 2.15 | 4.4 | 8.0 | 8.7 | 890 | 2170 | 2830 | 10.0 | 9.5 | 9.1 |

## SCM100ZS-W Table of Indoor unit combination with all indoor unit

| Indoor unit combination | | | Heating capacity (kW) | | | | | | | | Power consumption(W) | | | Standard current(A) | | |
|---|---|---|---|---|---|---|---|---|---|---|---|---|---|---|---|---|
| | | | Room heating capacity | | | | | Total capacity | | | | | | | | |
| | | | A | B | C | D | E | Min. | Standard | Max. | Min. | Standard | Max. | 220V | 230V | 240V |
| Heating operation | 1 room | 20 | 3.00 | - | - | - | - | 0.9 | 3.0 | 3.5 | 490 | 1060 | 1330 | 5.1 | 4.8 | 4.6 |
| | | 25 | 3.40 | - | - | - | - | 0.9 | 3.4 | 4.0 | 490 | 1140 | 1400 | 5.4 | 5.2 | 5.0 |
| | | 35 | 4.50 | - | - | - | - | 0.9 | 4.5 | 4.8 | 490 | 1350 | 1570 | 6.3 | 6.1 | 5.8 |
| | | 50 | 5.80 | - | - | - | - | 0.9 | 5.8 | 6.2 | 490 | 1610 | 1770 | 7.4 | 7.1 | 6.8 |
| | | 60 | 6.80 | - | - | - | - | 0.9 | 6.8 | 7.1 | 490 | 1800 | 1920 | 8.3 | 7.9 | 7.6 |
| | | 71 | 8.00 | - | - | - | - | 0.9 | 8.0 | 8.1 | 490 | 2030 | 2110 | 9.3 | 8.9 | 8.5 |
| | | 80 | 9.00 | - | - | - | - | 0.9 | 9.0 | 9.1 | 490 | 2220 | 2260 | 10.2 | 9.7 | 9.3 |
| | 2 room | 20 + 20 | 2.70 | 2.70 | - | - | - | 1.2 | 5.4 | 7.0 | 460 | 1170 | 1610 | 5.5 | 5.2 | 5.0 |
| | | 20 + 25 | 2.62 | 3.28 | - | - | - | 1.2 | 5.9 | 7.3 | 460 | 1310 | 1690 | 6.0 | 5.8 | 5.5 |
| | | 20 + 35 | 2.51 | 4.39 | - | - | - | 1.2 | 6.9 | 7.9 | 460 | 1580 | 1860 | 7.3 | 6.9 | 6.6 |
| | | 20 + 50 | 2.51 | 6.29 | - | - | - | 1.2 | 8.8 | 9.2 | 460 | 2130 | 2240 | 9.8 | 9.4 | 9.0 |
| | | 20 + 60 | 2.45 | 7.35 | - | - | - | 1.2 | 9.8 | 10.3 | 460 | 2430 | 2580 | 11.2 | 10.7 | 10.2 |
| | | 20 + 71 | 2.31 | 8.19 | - | - | - | 1.2 | 10.5 | 11.2 | 460 | 2620 | 2900 | 12.0 | 11.5 | 11.0 |
| | | 20 + 80 | 2.10 | 8.40 | - | - | - | 1.2 | 10.5 | 11.2 | 460 | 2620 | 2900 | 12.0 | 11.5 | 11.0 |
| | | 25 + 25 | 3.20 | 3.20 | - | - | - | 1.2 | 6.4 | 7.7 | 460 | 1440 | 1810 | 6.6 | 6.3 | 6.1 |
| | | 25 + 35 | 3.25 | 4.55 | - | - | - | 1.2 | 7.8 | 8.2 | 460 | 1830 | 1950 | 8.4 | 8.0 | 7.7 |
| | | 25 + 50 | 3.07 | 6.13 | - | - | - | 1.2 | 9.2 | 9.6 | 460 | 2240 | 2370 | 10.3 | 9.8 | 9.4 |
| | | 25 + 60 | 3.00 | 7.20 | - | - | - | 1.2 | 10.2 | 10.7 | 460 | 2550 | 2710 | 11.7 | 11.2 | 10.7 |
| | | 25 + 71 | 2.73 | 7.77 | - | - | - | 1.2 | 10.5 | 11.2 | 460 | 2620 | 2900 | 12.0 | 11.5 | 11.0 |
| | | 25 + 80 | 2.50 | 8.00 | - | - | - | 1.2 | 10.5 | 11.2 | 460 | 2620 | 2900 | 12.0 | 11.5 | 11.0 |
| | | 35 + 35 | 4.50 | 4.50 | - | - | - | 1.2 | 9.0 | 9.4 | 460 | 2180 | 2310 | 10.0 | 9.6 | 9.2 |
| | | 35 + 50 | 4.24 | 6.06 | - | - | - | 1.2 | 10.3 | 10.8 | 460 | 2560 | 2740 | 11.8 | 11.2 | 10.8 |
| | | 35 + 60 | 3.87 | 6.63 | - | - | - | 1.2 | 10.5 | 11.2 | 460 | 2620 | 2900 | 12.0 | 11.5 | 11.0 |
| | | 35 + 71 | 3.47 | 7.03 | - | - | - | 1.2 | 10.5 | 11.2 | 460 | 2620 | 2900 | 12.0 | 11.5 | 11.0 |
| | | 35 + 80 | 3.20 | 7.30 | - | - | - | 1.2 | 10.5 | 11.2 | 460 | 2620 | 2900 | 12.0 | 11.5 | 11.0 |
| | | 50 + 50 | 5.25 | 5.25 | - | - | - | 1.2 | 10.5 | 11.2 | 460 | 2620 | 2900 | 12.0 | 11.5 | 11.0 |
| | | 50 + 60 | 4.77 | 5.73 | - | - | - | 1.2 | 10.5 | 11.2 | 460 | 2620 | 2900 | 12.0 | 11.5 | 11.0 |
| | | 50 + 71 | 4.34 | 6.16 | - | - | - | 1.2 | 10.5 | 11.2 | 460 | 2620 | 2900 | 12.0 | 11.5 | 11.0 |
| | | 50 + 80 | 4.04 | 6.46 | - | - | - | 1.2 | 10.5 | 11.2 | 460 | 2620 | 2900 | 12.0 | 11.5 | 11.0 |
| | | 60 + 60 | 5.25 | 5.25 | - | - | - | 1.2 | 10.5 | 11.2 | 460 | 2620 | 2900 | 12.0 | 11.5 | 11.0 |
| | | 60 + 71 | 4.81 | 5.69 | - | - | - | 1.2 | 10.5 | 11.2 | 460 | 2620 | 2900 | 12.0 | 11.5 | 11.0 |
| | | 60 + 80 | 4.50 | 6.00 | - | - | - | 1.2 | 10.5 | 11.2 | 460 | 2620 | 2900 | 12.0 | 11.5 | 11.0 |
| | | 71 + 71 | 5.25 | 5.25 | - | - | - | 1.2 | 10.5 | 11.2 | 460 | 2620 | 2900 | 12.0 | 11.5 | 11.0 |
| | | 71 + 80 | 4.94 | 5.56 | - | - | - | 1.2 | 10.5 | 11.2 | 460 | 2620 | 2900 | 12.0 | 11.5 | 11.0 |
| | | 80 + 80 | 5.25 | 5.25 | - | - | - | 1.2 | 10.5 | 11.2 | 460 | 2620 | 2900 | 12.0 | 11.5 | 11.0 |
| | 3 room | 20 + 20 + 20 | 3.00 | 3.00 | 3.00 | - | - | 1.4 | 9.0 | 9.6 | 430 | 2140 | 2320 | 9.8 | 9.4 | 9.0 |
| | | 20 + 20 + 25 | 2.89 | 2.89 | 3.62 | - | - | 1.4 | 9.4 | 10.0 | 430 | 2260 | 2440 | 10.4 | 9.9 | 9.5 |
| | | 20 + 20 + 35 | 2.80 | 2.80 | 4.90 | - | - | 1.4 | 10.5 | 11.3 | 430 | 2540 | 2900 | 11.7 | 11.2 | 10.7 |
| | | 20 + 20 + 50 | 2.33 | 2.33 | 5.83 | - | - | 1.4 | 10.5 | 11.3 | 430 | 2540 | 2900 | 11.7 | 11.2 | 10.7 |
| | | 20 + 20 + 60 | 2.10 | 2.10 | 6.30 | - | - | 1.4 | 10.5 | 11.3 | 430 | 2540 | 2900 | 11.7 | 11.2 | 10.7 |
| | | 20 + 20 + 71 | 1.89 | 1.89 | 6.72 | - | - | 1.4 | 10.5 | 11.3 | 430 | 2540 | 2900 | 11.7 | 11.2 | 10.7 |
| | | 20 + 20 + 80 | 1.75 | 1.75 | 7.00 | - | - | 1.4 | 10.5 | 11.3 | 430 | 2540 | 2900 | 11.7 | 11.2 | 10.7 |
| | | 20 + 25 + 25 | 3.00 | 3.75 | 3.75 | - | - | 1.4 | 10.5 | 11.3 | 430 | 2540 | 2900 | 11.7 | 11.2 | 10.7 |
| | | 20 + 25 + 35 | 2.63 | 3.28 | 4.59 | - | - | 1.4 | 10.5 | 11.3 | 430 | 2540 | 2900 | 11.7 | 11.2 | 10.7 |
| | | 20 + 25 + 50 | 2.21 | 2.76 | 5.53 | - | - | 1.4 | 10.5 | 11.3 | 430 | 2540 | 2900 | 11.7 | 11.2 | 10.7 |

# MULTI-SPLIT SYSTEM

| Indoor unit combination | | | Heating capacity (kW) | | | | | | | | Power consumption(W) | | | Standard current(A) | | |
|---|---|---|---|---|---|---|---|---|---|---|---|---|---|---|---|---|
| | | | Room heating capacity | | | | | Total capacity | | | Min. | Standard | Max. | 220V | 230V | 240V |
| | | | A | B | C | D | E | Min. | Standard | Max. | | | | | | |
| Heating operation | 3 room | 20 + 25 + 60 | 2.00 | 2.50 | 6.00 | - | - | 1.4 | 10.5 | 11.3 | 430 | 2540 | 2900 | 11.7 | 11.2 | 10.7 |
| | | 20 + 35 + 35 | 2.33 | 4.08 | 4.08 | - | - | 1.4 | 10.5 | 11.3 | 430 | 2540 | 2900 | 11.7 | 11.2 | 10.7 |
| | | 20 + 35 + 50 | 2.00 | 3.50 | 5.00 | - | - | 1.4 | 10.5 | 11.3 | 430 | 2540 | 2900 | 11.7 | 11.2 | 10.7 |
| | | 20 + 35 + 60 | 1.83 | 3.20 | 5.48 | - | - | 1.4 | 10.5 | 11.3 | 430 | 2540 | 2900 | 11.7 | 11.2 | 10.7 |
| | | 20 + 35 + 71 | 1.67 | 2.92 | 5.92 | - | - | 1.4 | 10.5 | 11.3 | 430 | 2540 | 2900 | 11.7 | 11.2 | 10.7 |
| | | 20 + 35 + 80 | 1.56 | 2.72 | 6.22 | - | - | 1.4 | 10.5 | 11.3 | 430 | 2540 | 2900 | 11.7 | 11.2 | 10.7 |
| | | 20 + 50 + 50 | 1.75 | 4.38 | 4.38 | - | - | 1.4 | 10.5 | 11.3 | 430 | 2540 | 2900 | 11.7 | 11.2 | 10.7 |
| | | 20 + 50 + 60 | 1.62 | 4.04 | 4.85 | - | - | 1.4 | 10.5 | 11.3 | 430 | 2540 | 2900 | 11.7 | 11.2 | 10.7 |
| | | 20 + 50 + 71 | 1.49 | 3.72 | 5.29 | - | - | 1.4 | 10.5 | 11.3 | 430 | 2540 | 2900 | 11.7 | 11.2 | 10.7 |
| | | 20 + 50 + 80 | 1.40 | 3.50 | 5.60 | - | - | 1.4 | 10.5 | 11.3 | 430 | 2540 | 2900 | 11.7 | 11.2 | 10.7 |
| | | 20 + 60 + 60 | 1.50 | 4.50 | 4.50 | - | - | 1.4 | 10.5 | 11.3 | 430 | 2540 | 2900 | 11.7 | 11.2 | 10.7 |
| | | 20 + 60 + 71 | 1.39 | 4.17 | 4.94 | - | - | 1.4 | 10.5 | 11.3 | 430 | 2540 | 2900 | 11.7 | 11.2 | 10.7 |
| | | 20 + 60 + 80 | 1.31 | 3.94 | 5.25 | - | - | 1.4 | 10.5 | 11.3 | 430 | 2540 | 2900 | 11.7 | 11.2 | 10.7 |
| | | 25 + 25 + 25 | 3.50 | 3.50 | 3.50 | - | - | 1.4 | 10.5 | 11.3 | 430 | 2540 | 2900 | 11.7 | 11.2 | 10.7 |
| | | 25 + 25 + 35 | 3.09 | 3.09 | 4.32 | - | - | 1.4 | 10.5 | 11.3 | 430 | 2540 | 2900 | 11.7 | 11.2 | 10.7 |
| | | 25 + 25 + 50 | 2.63 | 2.63 | 5.25 | - | - | 1.4 | 10.5 | 11.3 | 430 | 2540 | 2900 | 11.7 | 11.2 | 10.7 |
| | | 25 + 25 + 60 | 2.39 | 2.39 | 5.73 | - | - | 1.4 | 10.5 | 11.3 | 430 | 2540 | 2900 | 11.7 | 11.2 | 10.7 |
| | | 25 + 25 + 71 | 2.17 | 2.17 | 6.16 | - | - | 1.4 | 10.5 | 11.3 | 430 | 2540 | 2900 | 11.7 | 11.2 | 10.7 |
| | | 25 + 25 + 80 | 2.02 | 2.02 | 6.46 | - | - | 1.4 | 10.5 | 11.3 | 430 | 2540 | 2900 | 11.7 | 11.2 | 10.7 |
| | | 25 + 35 + 35 | 2.76 | 3.87 | 3.87 | - | - | 1.4 | 10.5 | 11.3 | 430 | 2540 | 2900 | 11.7 | 11.2 | 10.7 |
| | | 25 + 35 + 50 | 2.39 | 3.34 | 4.77 | - | - | 1.4 | 10.5 | 11.3 | 430 | 2540 | 2900 | 11.7 | 11.2 | 10.7 |
| | | 25 + 35 + 60 | 2.19 | 3.06 | 5.25 | - | - | 1.4 | 10.5 | 11.3 | 430 | 2540 | 2900 | 11.7 | 11.2 | 10.7 |
| | | 25 + 35 + 71 | 2.00 | 2.81 | 5.69 | - | - | 1.4 | 10.5 | 11.3 | 430 | 2540 | 2900 | 11.7 | 11.2 | 10.7 |
| | | 25 + 35 + 80 | 1.88 | 2.63 | 6.00 | - | - | 1.4 | 10.5 | 11.3 | 430 | 2540 | 2900 | 11.7 | 11.2 | 10.7 |
| | | 25 + 50 + 50 | 2.10 | 4.20 | 4.20 | - | - | 1.4 | 10.5 | 11.3 | 430 | 2540 | 2900 | 11.7 | 11.2 | 10.7 |
| | | 25 + 50 + 60 | 1.94 | 3.89 | 4.67 | - | - | 1.4 | 10.5 | 11.3 | 430 | 2540 | 2900 | 11.7 | 11.2 | 10.7 |
| | | 25 + 50 + 71 | 1.80 | 3.60 | 5.11 | - | - | 1.4 | 10.5 | 11.3 | 430 | 2540 | 2900 | 11.7 | 11.2 | 10.7 |
| | | 25 + 50 + 80 | 1.69 | 3.39 | 5.42 | - | - | 1.4 | 10.5 | 11.3 | 430 | 2540 | 2900 | 11.7 | 11.2 | 10.7 |
| | | 25 + 60 + 60 | 1.81 | 4.34 | 4.34 | - | - | 1.4 | 10.5 | 11.3 | 430 | 2540 | 2900 | 11.7 | 11.2 | 10.7 |
| | | 25 + 60 + 71 | 1.68 | 4.04 | 4.78 | - | - | 1.4 | 10.5 | 11.3 | 430 | 2540 | 2900 | 11.7 | 11.2 | 10.7 |
| | | 35 + 35 + 35 | 3.50 | 3.50 | 3.50 | - | - | 1.4 | 10.5 | 11.3 | 430 | 2540 | 2900 | 11.7 | 11.2 | 10.7 |
| | | 35 + 35 + 50 | 3.06 | 3.06 | 4.38 | - | - | 1.4 | 10.5 | 11.3 | 430 | 2540 | 2900 | 11.7 | 11.2 | 10.7 |
| | | 35 + 35 + 60 | 2.83 | 2.83 | 4.85 | - | - | 1.4 | 10.5 | 11.3 | 430 | 2540 | 2900 | 11.7 | 11.2 | 10.7 |
| | | 35 + 35 + 71 | 2.61 | 2.61 | 5.29 | - | - | 1.4 | 10.5 | 11.3 | 430 | 2540 | 2900 | 11.7 | 11.2 | 10.7 |
| | | 35 + 35 + 80 | 2.45 | 2.45 | 5.60 | - | - | 1.4 | 10.5 | 11.3 | 430 | 2540 | 2900 | 11.7 | 11.2 | 10.7 |
| | | 35 + 50 + 50 | 2.72 | 3.89 | 3.89 | - | - | 1.4 | 10.5 | 11.3 | 430 | 2540 | 2900 | 11.7 | 11.2 | 10.7 |
| | | 35 + 50 + 60 | 2.53 | 3.62 | 4.34 | - | - | 1.4 | 10.5 | 11.3 | 430 | 2540 | 2900 | 11.7 | 11.2 | 10.7 |
| | | 35 + 50 + 71 | 2.36 | 3.37 | 4.78 | - | - | 1.4 | 10.5 | 11.3 | 430 | 2540 | 2900 | 11.7 | 11.2 | 10.7 |
| | | 35 + 60 + 60 | 2.37 | 4.06 | 4.06 | - | - | 1.4 | 10.5 | 11.3 | 430 | 2540 | 2900 | 11.7 | 11.2 | 10.7 |
| | | 50 + 50 + 50 | 3.50 | 3.50 | 3.50 | - | - | 1.4 | 10.5 | 11.3 | 430 | 2540 | 2900 | 11.7 | 11.2 | 10.7 |
| | | 50 + 50 + 60 | 3.28 | 3.28 | 3.94 | - | - | 1.4 | 10.5 | 11.3 | 430 | 2540 | 2900 | 11.7 | 11.2 | 10.7 |
| | 4 room | 20 + 20 + 20 + 20 | 2.63 | 2.63 | 2.63 | 2.63 | - | 1.6 | 10.5 | 11.4 | 400 | 2460 | 2900 | 11.3 | 10.8 | 10.4 |
| | | 20 + 20 + 20 + 25 | 2.47 | 2.47 | 2.47 | 3.09 | - | 1.6 | 10.5 | 11.4 | 400 | 2460 | 2900 | 11.3 | 10.8 | 10.4 |
| | | 20 + 20 + 20 + 35 | 2.21 | 2.21 | 2.21 | 3.87 | - | 1.6 | 10.5 | 11.4 | 400 | 2460 | 2900 | 11.3 | 10.8 | 10.4 |
| | | 20 + 20 + 20 + 50 | 1.91 | 1.91 | 1.91 | 4.77 | - | 1.6 | 10.5 | 11.4 | 400 | 2460 | 2900 | 11.3 | 10.8 | 10.4 |
| | | 20 + 20 + 20 + 60 | 1.75 | 1.75 | 1.75 | 5.25 | - | 1.6 | 10.5 | 11.4 | 400 | 2460 | 2900 | 11.3 | 10.8 | 10.4 |
| | | 20 + 20 + 20 + 71 | 1.60 | 1.60 | 1.60 | 5.69 | - | 1.6 | 10.5 | 11.4 | 400 | 2460 | 2900 | 11.3 | 10.8 | 10.4 |
| | | 20 + 20 + 20 + 80 | 1.50 | 1.50 | 1.50 | 6.00 | - | 1.6 | 10.5 | 11.4 | 400 | 2460 | 2900 | 11.3 | 10.8 | 10.4 |
| | | 20 + 20 + 25 + 25 | 2.33 | 2.33 | 2.92 | 2.92 | - | 1.6 | 10.5 | 11.4 | 400 | 2460 | 2900 | 11.3 | 10.8 | 10.4 |
| | | 20 + 20 + 25 + 35 | 2.10 | 2.10 | 2.63 | 3.68 | - | 1.6 | 10.5 | 11.4 | 400 | 2460 | 2900 | 11.3 | 10.8 | 10.4 |
| | | 20 + 20 + 25 + 50 | 1.83 | 1.83 | 2.28 | 4.57 | - | 1.6 | 10.5 | 11.4 | 400 | 2460 | 2900 | 11.3 | 10.8 | 10.4 |
| | | 20 + 20 + 25 + 60 | 1.68 | 1.68 | 2.10 | 5.04 | - | 1.6 | 10.5 | 11.4 | 400 | 2460 | 2900 | 11.3 | 10.8 | 10.4 |
| | | 20 + 20 + 25 + 71 | 1.54 | 1.54 | 1.93 | 5.48 | - | 1.6 | 10.5 | 11.4 | 400 | 2460 | 2900 | 11.3 | 10.8 | 10.4 |
| | | 20 + 20 + 25 + 80 | 1.45 | 1.45 | 1.81 | 5.79 | - | 1.6 | 10.5 | 11.4 | 400 | 2460 | 2900 | 11.3 | 10.8 | 10.4 |
| | | 20 + 20 + 35 + 35 | 1.91 | 1.91 | 3.34 | 3.34 | - | 1.6 | 10.5 | 11.4 | 400 | 2460 | 2900 | 11.3 | 10.8 | 10.4 |
| | | 20 + 20 + 35 + 50 | 1.68 | 1.68 | 2.94 | 4.20 | - | 1.6 | 10.5 | 11.4 | 400 | 2460 | 2900 | 11.3 | 10.8 | 10.4 |
| | | 20 + 20 + 35 + 60 | 1.56 | 1.56 | 2.72 | 4.67 | - | 1.6 | 10.5 | 11.4 | 400 | 2460 | 2900 | 11.3 | 10.8 | 10.4 |
| | | 20 + 20 + 35 + 71 | 1.44 | 1.44 | 2.52 | 5.11 | - | 1.6 | 10.5 | 11.4 | 400 | 2460 | 2900 | 11.3 | 10.8 | 10.4 |
| | | 20 + 20 + 35 + 80 | 1.35 | 1.35 | 2.37 | 5.42 | - | 1.6 | 10.5 | 11.4 | 400 | 2460 | 2900 | 11.3 | 10.8 | 10.4 |
| | | 20 + 20 + 50 + 50 | 1.50 | 1.50 | 3.75 | 3.75 | - | 1.6 | 10.5 | 11.4 | 400 | 2460 | 2900 | 11.3 | 10.8 | 10.4 |
| | | 20 + 20 + 50 + 60 | 1.40 | 1.40 | 3.50 | 4.20 | - | 1.6 | 10.5 | 11.4 | 400 | 2460 | 2900 | 11.3 | 10.8 | 10.4 |
| | | 20 + 20 + 60 + 60 | 1.31 | 1.31 | 3.94 | 3.94 | - | 1.6 | 10.5 | 11.4 | 400 | 2460 | 2900 | 11.3 | 10.8 | 10.4 |
| | | 20 + 25 + 25 + 25 | 2.21 | 2.76 | 2.76 | 2.76 | - | 1.6 | 10.5 | 11.4 | 400 | 2460 | 2900 | 11.3 | 10.8 | 10.4 |
| | | 20 + 25 + 25 + 35 | 2.00 | 2.50 | 2.50 | 3.50 | - | 1.6 | 10.5 | 11.4 | 400 | 2460 | 2900 | 11.3 | 10.8 | 10.4 |
| | | 20 + 25 + 25 + 50 | 1.75 | 2.19 | 2.19 | 4.38 | - | 1.6 | 10.5 | 11.4 | 400 | 2460 | 2900 | 11.3 | 10.8 | 10.4 |
| | | 20 + 25 + 25 + 60 | 1.62 | 2.02 | 2.02 | 4.85 | - | 1.6 | 10.5 | 11.4 | 400 | 2460 | 2900 | 11.3 | 10.8 | 10.4 |
| | | 20 + 25 + 25 + 71 | 1.49 | 1.86 | 1.86 | 5.29 | - | 1.6 | 10.5 | 11.4 | 400 | 2460 | 2900 | 11.3 | 10.8 | 10.4 |
| | | 20 + 25 + 25 + 80 | 1.40 | 1.75 | 1.75 | 5.60 | - | 1.6 | 10.5 | 11.4 | 400 | 2460 | 2900 | 11.3 | 10.8 | 10.4 |
| | | 20 + 25 + 35 + 35 | 1.83 | 2.28 | 3.20 | 3.20 | - | 1.6 | 10.5 | 11.4 | 400 | 2460 | 2900 | 11.3 | 10.8 | 10.4 |
| | | 20 + 25 + 35 + 50 | 1.62 | 2.02 | 2.83 | 4.04 | - | 1.6 | 10.5 | 11.4 | 400 | 2460 | 2900 | 11.3 | 10.8 | 10.4 |
| | | 20 + 25 + 35 + 60 | 1.50 | 1.88 | 2.63 | 4.50 | - | 1.6 | 10.5 | 11.4 | 400 | 2460 | 2900 | 11.3 | 10.8 | 10.4 |
| | | 20 + 25 + 35 + 71 | 1.39 | 1.74 | 2.43 | 4.94 | - | 1.6 | 10.5 | 11.4 | 400 | 2460 | 2900 | 11.3 | 10.8 | 10.4 |
| | | 20 + 25 + 35 + 80 | 1.31 | 1.64 | 2.30 | 5.25 | - | 1.6 | 10.5 | 11.4 | 400 | 2460 | 2900 | 11.3 | 10.8 | 10.4 |
| | | 20 + 25 + 50 + 50 | 1.45 | 1.81 | 3.62 | 3.62 | - | 1.6 | 10.5 | 11.4 | 400 | 2460 | 2900 | 11.3 | 10.8 | 10.4 |
| | | 20 + 25 + 50 + 60 | 1.35 | 1.69 | 3.39 | 4.06 | - | 1.6 | 10.5 | 11.4 | 400 | 2460 | 2900 | 11.3 | 10.8 | 10.4 |

| Indoor unit combination | | | Heating capacity (kW) | | | | | | | | Power consumption(W) | | | Standard current(A) | | |
|---|---|---|---|---|---|---|---|---|---|---|---|---|---|---|---|---|
| | | | Room heating capacity | | | | | Total capacity | | | | | | | | |
| | | | A | B | C | D | E | Min. | Standard | Max. | Min. | Standard | Max. | 220V | 230V | 240V |
| Heating operation | 4 room | 20 + 35 + 35 + 35 | 1.68 | 2.94 | 2.94 | 2.94 | - | 1.6 | 10.5 | 11.4 | 400 | 2460 | 2900 | 11.3 | 10.8 | 10.4 |
| | | 20 + 35 + 35 + 50 | 1.50 | 2.63 | 2.63 | 3.75 | - | 1.6 | 10.5 | 11.4 | 400 | 2460 | 2900 | 11.3 | 10.8 | 10.4 |
| | | 20 + 35 + 35 + 60 | 1.40 | 2.45 | 2.45 | 4.20 | - | 1.6 | 10.5 | 11.4 | 400 | 2460 | 2900 | 11.3 | 10.8 | 10.4 |
| | | 20 + 35 + 50 + 50 | 1.35 | 2.37 | 3.39 | 3.39 | - | 1.6 | 10.5 | 11.4 | 400 | 2460 | 2900 | 11.3 | 10.8 | 10.4 |
| | | 25 + 25 + 25 + 25 | 2.63 | 2.63 | 2.63 | 2.63 | - | 1.6 | 10.5 | 11.4 | 400 | 2460 | 2900 | 11.3 | 10.8 | 10.4 |
| | | 25 + 25 + 25 + 35 | 2.39 | 2.39 | 2.39 | 3.34 | - | 1.6 | 10.5 | 11.4 | 400 | 2460 | 2900 | 11.3 | 10.8 | 10.4 |
| | | 25 + 25 + 25 + 50 | 2.10 | 2.10 | 2.10 | 4.20 | - | 1.6 | 10.5 | 11.4 | 400 | 2460 | 2900 | 11.3 | 10.8 | 10.4 |
| | | 25 + 25 + 25 + 60 | 1.94 | 1.94 | 1.94 | 4.67 | - | 1.6 | 10.5 | 11.4 | 400 | 2460 | 2900 | 11.3 | 10.8 | 10.4 |
| | | 25 + 25 + 25 + 71 | 1.80 | 1.80 | 1.80 | 5.11 | - | 1.6 | 10.5 | 11.4 | 400 | 2460 | 2900 | 11.3 | 10.8 | 10.4 |
| | | 25 + 25 + 25 + 80 | 1.69 | 1.69 | 1.69 | 5.42 | - | 1.6 | 10.5 | 11.4 | 400 | 2460 | 2900 | 11.3 | 10.8 | 10.4 |
| | | 25 + 25 + 35 + 35 | 2.19 | 2.19 | 3.06 | 3.06 | - | 1.6 | 10.5 | 11.4 | 400 | 2460 | 2900 | 11.3 | 10.8 | 10.4 |
| | | 25 + 25 + 35 + 50 | 1.94 | 1.94 | 2.72 | 3.89 | - | 1.6 | 10.5 | 11.4 | 400 | 2460 | 2900 | 11.3 | 10.8 | 10.4 |
| | | 25 + 25 + 35 + 60 | 1.81 | 1.81 | 2.53 | 4.34 | - | 1.6 | 10.5 | 11.4 | 400 | 2460 | 2900 | 11.3 | 10.8 | 10.4 |
| | | 25 + 25 + 35 + 71 | 1.68 | 1.68 | 2.36 | 4.78 | - | 1.6 | 10.5 | 11.4 | 400 | 2460 | 2900 | 11.3 | 10.8 | 10.4 |
| | | 25 + 25 + 50 + 50 | 1.75 | 1.75 | 3.50 | 3.50 | - | 1.6 | 10.5 | 11.4 | 400 | 2460 | 2900 | 11.3 | 10.8 | 10.4 |
| | | 25 + 25 + 50 + 60 | 1.64 | 1.64 | 3.28 | 3.94 | - | 1.6 | 10.5 | 11.4 | 400 | 2460 | 2900 | 11.3 | 10.8 | 10.4 |
| | | 25 + 35 + 35 + 35 | 2.02 | 2.83 | 2.83 | 2.83 | - | 1.6 | 10.5 | 11.4 | 400 | 2460 | 2900 | 11.3 | 10.8 | 10.4 |
| | | 25 + 35 + 35 + 50 | 1.81 | 2.53 | 2.53 | 3.62 | - | 1.6 | 10.5 | 11.4 | 400 | 2460 | 2900 | 11.3 | 10.8 | 10.4 |
| | | 25 + 35 + 35 + 60 | 1.69 | 2.37 | 2.37 | 4.06 | - | 1.6 | 10.5 | 11.4 | 400 | 2460 | 2900 | 11.3 | 10.8 | 10.4 |
| | | 25 + 35 + 50 + 50 | 1.64 | 2.30 | 3.28 | 3.28 | - | 1.6 | 10.5 | 11.4 | 400 | 2460 | 2900 | 11.3 | 10.8 | 10.4 |
| | | 35 + 35 + 35 + 35 | 2.63 | 2.63 | 2.63 | 2.63 | - | 1.6 | 10.5 | 11.4 | 400 | 2460 | 2900 | 11.3 | 10.8 | 10.4 |
| | | 35 + 35 + 35 + 50 | 2.37 | 2.37 | 2.37 | 3.39 | - | 1.6 | 10.5 | 11.4 | 400 | 2460 | 2900 | 11.3 | 10.8 | 10.4 |
| | 5 room | 20 + 20 + 20 + 20 + 20 | 2.10 | 2.10 | 2.10 | 2.10 | 2.10 | 1.8 | 10.5 | 11.5 | 370 | 2380 | 2900 | 10.9 | 10.5 | 10.0 |
| | | 20 + 20 + 20 + 20 + 25 | 2.00 | 2.00 | 2.00 | 2.00 | 2.50 | 1.8 | 10.5 | 11.5 | 370 | 2380 | 2900 | 10.9 | 10.5 | 10.0 |
| | | 20 + 20 + 20 + 20 + 35 | 1.83 | 1.83 | 1.83 | 1.83 | 3.20 | 1.8 | 10.5 | 11.5 | 370 | 2380 | 2900 | 10.9 | 10.5 | 10.0 |
| | | 20 + 20 + 20 + 20 + 50 | 1.62 | 1.62 | 1.62 | 1.62 | 4.04 | 1.8 | 10.5 | 11.5 | 370 | 2380 | 2900 | 10.9 | 10.5 | 10.0 |
| | | 20 + 20 + 20 + 20 + 60 | 1.50 | 1.50 | 1.50 | 1.50 | 4.50 | 1.8 | 10.5 | 11.5 | 370 | 2380 | 2900 | 10.9 | 10.5 | 10.0 |
| | | 20 + 20 + 20 + 25 + 25 | 1.91 | 1.91 | 1.91 | 2.39 | 2.39 | 1.8 | 10.5 | 11.5 | 370 | 2380 | 2900 | 10.9 | 10.5 | 10.0 |
| | | 20 + 20 + 20 + 25 + 35 | 1.75 | 1.75 | 1.75 | 2.19 | 3.06 | 1.8 | 10.5 | 11.5 | 370 | 2380 | 2900 | 10.9 | 10.5 | 10.0 |
| | | 20 + 20 + 20 + 25 + 50 | 1.56 | 1.56 | 1.56 | 1.94 | 3.89 | 1.8 | 10.5 | 11.5 | 370 | 2380 | 2900 | 10.9 | 10.5 | 10.0 |
| | | 20 + 20 + 20 + 25 + 60 | 1.45 | 1.45 | 1.45 | 1.81 | 4.34 | 1.8 | 10.5 | 11.5 | 370 | 2380 | 2900 | 10.9 | 10.5 | 10.0 |
| | | 20 + 20 + 20 + 35 + 35 | 1.62 | 1.62 | 1.62 | 2.83 | 2.83 | 1.8 | 10.5 | 11.5 | 370 | 2380 | 2900 | 10.9 | 10.5 | 10.0 |
| | | 20 + 20 + 20 + 35 + 50 | 1.45 | 1.45 | 1.45 | 2.53 | 3.62 | 1.8 | 10.5 | 11.5 | 370 | 2380 | 2900 | 10.9 | 10.5 | 10.0 |
| | | 20 + 20 + 20 + 35 + 60 | 1.35 | 1.35 | 1.35 | 2.37 | 4.06 | 1.8 | 10.5 | 11.5 | 370 | 2380 | 2900 | 10.9 | 10.5 | 10.0 |
| | | 20 + 20 + 25 + 25 + 25 | 1.83 | 1.83 | 2.28 | 2.28 | 2.28 | 1.8 | 10.5 | 11.5 | 370 | 2380 | 2900 | 10.9 | 10.5 | 10.0 |
| | | 20 + 20 + 25 + 25 + 35 | 1.68 | 1.68 | 2.10 | 2.10 | 2.94 | 1.8 | 10.5 | 11.5 | 370 | 2380 | 2900 | 10.9 | 10.5 | 10.0 |
| | | 20 + 20 + 25 + 25 + 50 | 1.50 | 1.50 | 1.88 | 1.88 | 3.75 | 1.8 | 10.5 | 11.5 | 370 | 2380 | 2900 | 10.9 | 10.5 | 10.0 |
| | | 20 + 20 + 25 + 25 + 60 | 1.40 | 1.40 | 1.75 | 1.75 | 4.20 | 1.8 | 10.5 | 11.5 | 370 | 2380 | 2900 | 10.9 | 10.5 | 10.0 |
| | | 20 + 20 + 25 + 35 + 35 | 1.56 | 1.56 | 1.94 | 2.72 | 2.72 | 1.8 | 10.5 | 11.5 | 370 | 2380 | 2900 | 10.9 | 10.5 | 10.0 |
| | | 20 + 20 + 25 + 35 + 50 | 1.40 | 1.40 | 1.75 | 2.45 | 3.50 | 1.8 | 10.5 | 11.5 | 370 | 2380 | 2900 | 10.9 | 10.5 | 10.0 |
| | | 20 + 20 + 25 + 35 + 60 | 1.31 | 1.31 | 1.64 | 2.30 | 3.94 | 1.8 | 10.5 | 11.5 | 370 | 2380 | 2900 | 10.9 | 10.5 | 10.0 |
| | | 20 + 20 + 35 + 35 + 35 | 1.45 | 1.45 | 2.53 | 2.53 | 2.53 | 1.8 | 10.5 | 11.5 | 370 | 2380 | 2900 | 10.9 | 10.5 | 10.0 |
| | | 20 + 20 + 35 + 35 + 50 | 1.31 | 1.31 | 2.30 | 2.30 | 3.28 | 1.8 | 10.5 | 11.5 | 370 | 2380 | 2900 | 10.9 | 10.5 | 10.0 |
| | | 20 + 25 + 25 + 25 + 25 | 1.75 | 2.19 | 2.19 | 2.19 | 2.19 | 1.8 | 10.5 | 11.5 | 370 | 2380 | 2900 | 10.9 | 10.5 | 10.0 |
| | | 20 + 25 + 25 + 25 + 35 | 1.62 | 2.02 | 2.02 | 2.02 | 2.83 | 1.8 | 10.5 | 11.5 | 370 | 2380 | 2900 | 10.9 | 10.5 | 10.0 |
| | | 20 + 25 + 25 + 25 + 50 | 1.45 | 1.81 | 1.81 | 1.81 | 3.62 | 1.8 | 10.5 | 11.5 | 370 | 2380 | 2900 | 10.9 | 10.5 | 10.0 |
| | | 20 + 25 + 25 + 25 + 60 | 1.35 | 1.69 | 1.69 | 1.69 | 4.06 | 1.8 | 10.5 | 11.5 | 370 | 2380 | 2900 | 10.9 | 10.5 | 10.0 |
| | | 20 + 25 + 25 + 35 + 35 | 1.50 | 1.88 | 1.88 | 2.63 | 2.63 | 1.8 | 10.5 | 11.5 | 370 | 2380 | 2900 | 10.9 | 10.5 | 10.0 |
| | | 20 + 25 + 25 + 35 + 50 | 1.35 | 1.69 | 1.69 | 2.37 | 3.39 | 1.8 | 10.5 | 11.5 | 370 | 2380 | 2900 | 10.9 | 10.5 | 10.0 |
| | | 20 + 25 + 35 + 35 + 35 | 1.40 | 1.75 | 2.45 | 2.45 | 2.45 | 1.8 | 10.5 | 11.5 | 370 | 2380 | 2900 | 10.9 | 10.5 | 10.0 |
| | | 20 + 35 + 35 + 35 + 35 | 1.31 | 2.30 | 2.30 | 2.30 | 2.30 | 1.8 | 10.5 | 11.5 | 370 | 2380 | 2900 | 10.9 | 10.5 | 10.0 |
| | | 25 + 25 + 25 + 25 + 25 | 2.10 | 2.10 | 2.10 | 2.10 | 2.10 | 1.8 | 10.5 | 11.5 | 370 | 2380 | 2900 | 10.9 | 10.5 | 10.0 |
| | | 25 + 25 + 25 + 25 + 35 | 1.94 | 1.94 | 1.94 | 1.94 | 2.72 | 1.8 | 10.5 | 11.5 | 370 | 2380 | 2900 | 10.9 | 10.5 | 10.0 |
| | | 25 + 25 + 25 + 25 + 50 | 1.75 | 1.75 | 1.75 | 1.75 | 3.50 | 1.8 | 10.5 | 11.5 | 370 | 2380 | 2900 | 10.9 | 10.5 | 10.0 |
| | | 25 + 25 + 25 + 25 + 60 | 1.64 | 1.64 | 1.64 | 1.64 | 3.94 | 1.8 | 10.5 | 11.5 | 370 | 2380 | 2900 | 10.9 | 10.5 | 10.0 |
| | | 25 + 25 + 25 + 35 + 35 | 1.81 | 1.81 | 1.81 | 2.53 | 2.53 | 1.8 | 10.5 | 11.5 | 370 | 2380 | 2900 | 10.9 | 10.5 | 10.0 |
| | | 25 + 25 + 25 + 35 + 50 | 1.64 | 1.64 | 1.64 | 2.30 | 3.28 | 1.8 | 10.5 | 11.5 | 370 | 2380 | 2900 | 10.9 | 10.5 | 10.0 |
| | | 25 + 25 + 35 + 35 + 35 | 1.69 | 1.69 | 2.37 | 2.37 | 2.37 | 1.8 | 10.5 | 11.5 | 370 | 2380 | 2900 | 10.9 | 10.5 | 10.0 |

# MULTI-SPLIT SYSTEM

| Indoor unit combination | | | Cooling capacity (kW) | | | | | | | | Power consumption(W) | | | Standard current(A) | | |
|---|---|---|---|---|---|---|---|---|---|---|---|---|---|---|---|---|
| | | | Room cooling capacity | | | | | Total capacity | | | | | | | | |
| | | | A | B | C | D | E | Min. | Standard | Max. | Min. | Standard | Max. | 220V | 230V | 240V |
| Cooling operation | 1 room | 20 | 2.00 | - | - | - | - | 1.7 | 2.0 | 2.7 | 500 | 530 | 950 | 2.5 | 2.4 | 2.3 |
| | | 25 | 2.50 | - | - | - | - | 1.7 | 2.5 | 3.2 | 500 | 690 | 1008 | 3.3 | 3.1 | 3.0 |
| | | 35 | 3.50 | - | - | - | - | 1.7 | 3.5 | 3.7 | 500 | 1010 | 1340 | 4.8 | 4.6 | 4.4 |
| | | 50 | 5.00 | - | - | - | - | 1.7 | 5.0 | 5.8 | 500 | 1490 | 1730 | 6.9 | 6.6 | 6.3 |
| | | 60 | 6.00 | - | - | - | - | 1.7 | 6.0 | 6.7 | 500 | 1810 | 1990 | 8.3 | 8.0 | 7.6 |
| | | 71 | 7.10 | - | - | - | - | 1.7 | 7.10 | 7.2 | 500 | 2170 | 2270 | 10.1 | 9.6 | 9.2 |
| | | 80 | 8.00 | - | - | - | - | 1.7 | 8.00 | 8.1 | 500 | 2450 | 2500 | 11.4 | 10.9 | 10.4 |
| | 2 room | 20 + 20 | 2.00 | 2.00 | - | - | - | 1.9 | 4.0 | 5.8 | 495 | 850 | 1430 | 4.0 | 3.8 | 3.7 |
| | | 20 + 25 | 2.00 | 2.50 | - | - | - | 1.9 | 4.5 | 6.1 | 495 | 1010 | 1540 | 4.7 | 4.5 | 4.3 |
| | | 20 + 35 | 2.00 | 3.50 | - | - | - | 1.9 | 5.5 | 6.6 | 495 | 1330 | 1720 | 6.2 | 5.9 | 5.7 |
| | | 20 + 50 | 2.00 | 5.00 | - | - | - | 1.9 | 7.0 | 7.7 | 495 | 1880 | 2170 | 8.6 | 8.2 | 7.9 |
| | | 20 + 60 | 2.00 | 6.00 | - | - | - | 1.9 | 8.0 | 8.8 | 495 | 2300 | 2690 | 10.7 | 10.2 | 9.8 |
| | | 20 + 71 | 2.00 | 7.10 | - | - | - | 1.9 | 9.1 | 10.0 | 495 | 2850 | 3420 | 13.2 | 12.6 | 12.1 |
| | | 20 + 80 | 2.00 | 8.00 | - | - | - | 1.9 | 10.0 | 10.3 | 495 | 3450 | 3650 | 16.0 | 15.3 | 14.7 |
| | | 25 + 25 | 2.50 | 2.50 | - | - | - | 1.9 | 5.0 | 6.5 | 495 | 1170 | 1690 | 5.4 | 5.2 | 5.0 |
| | | 25 + 35 | 2.50 | 3.50 | - | - | - | 1.9 | 6.0 | 6.8 | 495 | 1600 | 1800 | 7.4 | 7.1 | 6.8 |
| | | 25 + 50 | 2.50 | 5.00 | - | - | - | 1.9 | 7.5 | 8.4 | 495 | 2080 | 2490 | 9.6 | 9.2 | 8.8 |
| | | 25 + 60 | 2.50 | 6.00 | - | - | - | 1.9 | 8.5 | 9.4 | 495 | 2630 | 3020 | 12.2 | 11.7 | 11.2 |
| | | 25 + 71 | 2.50 | 7.10 | - | - | - | 1.9 | 9.6 | 10.2 | 495 | 3140 | 3570 | 14.6 | 13.9 | 13.4 |
| | | 25 + 80 | 2.38 | 7.62 | - | - | - | 1.9 | 10.0 | 10.3 | 495 | 3450 | 3650 | 16.0 | 15.3 | 14.7 |
| | | 35 + 35 | 3.50 | 3.50 | - | - | - | 1.9 | 7.0 | 7.7 | 495 | 1880 | 2170 | 8.6 | 8.2 | 7.9 |
| | | 35 + 50 | 3.50 | 5.00 | - | - | - | 1.9 | 8.5 | 9.4 | 495 | 2630 | 3020 | 12.2 | 11.7 | 11.2 |
| | | 35 + 60 | 3.50 | 6.00 | - | - | - | 1.9 | 9.5 | 10.2 | 495 | 3080 | 3570 | 14.3 | 13.7 | 13.1 |
| | | 35 + 71 | 3.30 | 6.70 | - | - | - | 1.9 | 10.0 | 10.3 | 495 | 3450 | 3650 | 16.0 | 15.3 | 14.7 |
| | | 35 + 80 | 3.04 | 6.96 | - | - | - | 1.9 | 10.0 | 10.3 | 495 | 3450 | 3650 | 16.0 | 15.3 | 14.7 |
| | | 50 + 50 | 5.00 | 5.00 | - | - | - | 1.9 | 10.0 | 10.3 | 495 | 3450 | 3650 | 16.0 | 15.3 | 14.7 |
| | | 50 + 60 | 4.55 | 5.45 | - | - | - | 1.9 | 10.0 | 10.3 | 495 | 3450 | 3650 | 16.0 | 15.3 | 14.7 |
| | | 50 + 71 | 4.13 | 5.87 | - | - | - | 1.9 | 10.0 | 10.3 | 495 | 3450 | 3650 | 16.0 | 15.3 | 14.7 |
| | | 50 + 80 | 3.85 | 6.15 | - | - | - | 1.9 | 10.0 | 10.3 | 495 | 3450 | 3650 | 16.0 | 15.3 | 14.7 |
| | | 60 + 60 | 5.00 | 5.00 | - | - | - | 1.9 | 10.0 | 10.3 | 495 | 3450 | 3650 | 16.0 | 15.3 | 14.7 |
| | | 60 + 71 | 4.58 | 5.42 | - | - | - | 1.9 | 10.0 | 10.3 | 495 | 3450 | 3650 | 16.0 | 15.3 | 14.7 |
| | | 60 + 80 | 4.29 | 5.71 | - | - | - | 1.9 | 10.0 | 10.3 | 495 | 3450 | 3650 | 16.0 | 15.3 | 14.7 |
| | | 71 + 71 | 5.00 | 5.00 | - | - | - | 1.9 | 10.0 | 10.3 | 495 | 3450 | 3650 | 16.0 | 15.3 | 14.7 |
| | | 71 + 80 | 4.70 | 5.30 | - | - | - | 1.9 | 10.0 | 10.3 | 495 | 3450 | 3650 | 16.0 | 15.3 | 14.7 |
| | | 80 + 80 | 5.00 | 5.00 | - | - | - | 1.9 | 10.0 | 10.3 | 495 | 3450 | 3650 | 16.0 | 15.3 | 14.7 |
| | 3 room | 20 + 20 + 20 | 2.00 | 2.00 | 2.00 | - | - | 2.1 | 6.0 | 7.4 | 490 | 1430 | 1930 | 6.6 | 6.3 | 6.1 |
| | | 20 + 20 + 25 | 2.00 | 2.00 | 2.50 | - | - | 2.1 | 6.5 | 7.7 | 490 | 1600 | 2050 | 7.4 | 7.1 | 6.8 |
| | | 20 + 20 + 35 | 2.00 | 2.00 | 3.50 | - | - | 2.1 | 7.5 | 8.6 | 490 | 1970 | 2430 | 9.1 | 8.7 | 8.4 |
| | | 20 + 20 + 50 | 2.00 | 2.00 | 5.00 | - | - | 2.1 | 9.0 | 9.6 | 490 | 2610 | 2920 | 12.1 | 11.6 | 11.1 |
| | | 20 + 20 + 60 | 2.00 | 2.00 | 6.00 | - | - | 2.1 | 10.0 | 10.7 | 490 | 3230 | 3650 | 15.0 | 14.3 | 13.7 |
| | | 20 + 20 + 71 | 1.80 | 1.80 | 6.40 | - | - | 2.1 | 10.0 | 10.7 | 490 | 3230 | 3650 | 15.0 | 14.3 | 13.7 |
| | | 20 + 20 + 80 | 1.67 | 1.67 | 6.67 | - | - | 2.1 | 10.0 | 10.7 | 490 | 3230 | 3650 | 15.0 | 14.3 | 13.7 |
| | | 20 + 25 + 25 | 2.00 | 2.50 | 2.50 | - | - | 2.1 | 7.0 | 8.0 | 490 | 1780 | 2170 | 8.2 | 7.8 | 7.5 |
| | | 20 + 25 + 35 | 2.00 | 2.50 | 3.50 | - | - | 2.1 | 8.0 | 9.0 | 490 | 2170 | 2160 | 10.1 | 9.6 | 9.2 |
| | | 20 + 25 + 50 | 2.00 | 2.50 | 5.00 | - | - | 2.1 | 9.5 | 10.3 | 490 | 2870 | 3340 | 13.3 | 12.7 | 12.2 |
| | | 20 + 25 + 60 | 1.90 | 2.38 | 5.71 | - | - | 2.1 | 10.0 | 10.7 | 490 | 3230 | 3650 | 15.0 | 14.3 | 13.7 |
| | | 20 + 35 + 35 | 2.00 | 3.50 | 3.50 | - | - | 2.1 | 9.0 | 9.6 | 490 | 2610 | 2920 | 12.1 | 11.6 | 11.1 |
| | | 20 + 35 + 50 | 1.90 | 3.33 | 4.76 | - | - | 2.1 | 10.0 | 10.7 | 490 | 3230 | 3650 | 15.0 | 14.3 | 13.7 |
| | | 20 + 35 + 60 | 1.74 | 3.04 | 5.22 | - | - | 2.1 | 10.0 | 10.7 | 490 | 3230 | 3650 | 15.0 | 14.3 | 13.7 |
| | | 20 + 35 + 71 | 1.59 | 2.78 | 5.63 | - | - | 2.1 | 10.0 | 10.7 | 490 | 3230 | 3650 | 15.0 | 14.3 | 13.7 |
| | | 20 + 35 + 80 | 1.48 | 2.59 | 5.93 | - | - | 2.1 | 10.0 | 10.7 | 490 | 3230 | 3650 | 15.0 | 14.3 | 13.7 |
| | | 20 + 50 + 50 | 1.67 | 4.17 | 4.17 | - | - | 2.1 | 10.0 | 10.7 | 490 | 3230 | 3650 | 15.0 | 14.3 | 13.7 |
| | | 20 + 50 + 60 | 1.54 | 3.85 | 4.62 | - | - | 2.1 | 10.0 | 10.7 | 490 | 3230 | 3650 | 15.0 | 14.3 | 13.7 |
| | | 20 + 50 + 71 | 1.42 | 3.55 | 5.04 | - | - | 2.1 | 10.0 | 10.7 | 490 | 3230 | 3650 | 15.0 | 14.3 | 13.7 |
| | | 20 + 50 + 80 | 1.33 | 3.33 | 5.33 | - | - | 2.1 | 10.0 | 10.7 | 490 | 3230 | 3650 | 15.0 | 14.3 | 13.7 |
| | | 20 + 60 + 60 | 1.43 | 4.29 | 4.29 | - | - | 2.1 | 10.0 | 10.7 | 490 | 3230 | 3650 | 15.0 | 14.3 | 13.7 |
| | | 20 + 60 + 71 | 1.32 | 3.97 | 4.70 | - | - | 2.1 | 10.0 | 10.7 | 490 | 3230 | 3650 | 15.0 | 14.3 | 13.7 |
| | | 20 + 60 + 80 | 1.25 | 3.75 | 5.00 | - | - | 2.1 | 10.0 | 10.7 | 490 | 3230 | 3650 | 15.0 | 14.3 | 13.7 |
| | | 25 + 25 + 25 | 2.50 | 2.50 | 2.50 | - | - | 2.1 | 7.5 | 8.6 | 490 | 1970 | 2430 | 9.1 | 8.7 | 8.4 |
| | | 25 + 25 + 35 | 2.50 | 2.50 | 3.50 | - | - | 2.1 | 8.5 | 9.2 | 490 | 2380 | 2710 | 11.0 | 10.6 | 10.1 |
| | | 25 + 25 + 50 | 2.50 | 2.50 | 5.00 | - | - | 2.1 | 10.0 | 10.7 | 490 | 3230 | 3650 | 15.0 | 14.3 | 13.7 |
| | | 25 + 25 + 60 | 2.27 | 2.27 | 5.45 | - | - | 2.1 | 10.0 | 10.7 | 490 | 3230 | 3650 | 15.0 | 14.3 | 13.7 |
| | | 25 + 25 + 71 | 2.07 | 2.07 | 5.87 | - | - | 2.1 | 10.0 | 10.7 | 490 | 3230 | 3650 | 15.0 | 14.3 | 13.7 |
| | | 25 + 25 + 80 | 1.92 | 1.92 | 6.15 | - | - | 2.1 | 10.0 | 10.7 | 490 | 3230 | 3650 | 15.0 | 14.3 | 13.7 |
| | | 25 + 35 + 35 | 2.50 | 3.50 | 3.50 | - | - | 2.1 | 9.5 | 10.3 | 490 | 2870 | 3340 | 13.3 | 12.7 | 12.2 |
| | | 25 + 35 + 50 | 2.27 | 3.18 | 4.55 | - | - | 2.1 | 10.0 | 10.7 | 490 | 3230 | 3650 | 15.0 | 14.3 | 13.7 |
| | | 25 + 35 + 60 | 2.08 | 2.92 | 5.00 | - | - | 2.1 | 10.0 | 10.7 | 490 | 3230 | 3650 | 15.0 | 14.3 | 13.7 |
| | | 25 + 35 + 71 | 1.91 | 2.67 | 5.42 | - | - | 2.1 | 10.0 | 10.7 | 490 | 3230 | 3650 | 15.0 | 14.3 | 13.7 |
| | | 25 + 35 + 80 | 1.79 | 2.50 | 5.71 | - | - | 2.1 | 10.0 | 10.7 | 490 | 3230 | 3650 | 15.0 | 14.3 | 13.7 |
| | | 25 + 50 + 50 | 2.00 | 4.00 | 4.00 | - | - | 2.1 | 10.0 | 10.7 | 490 | 3230 | 3650 | 15.0 | 14.3 | 13.7 |
| | | 25 + 50 + 60 | 1.85 | 3.70 | 4.44 | - | - | 2.1 | 10.0 | 10.7 | 490 | 3230 | 3650 | 15.0 | 14.3 | 13.7 |
| | | 25 + 50 + 71 | 1.71 | 3.42 | 4.86 | - | - | 2.1 | 10.0 | 10.7 | 490 | 3230 | 3650 | 15.0 | 14.3 | 13.7 |
| | | 25 + 50 + 80 | 1.61 | 3.23 | 5.16 | - | - | 2.1 | 10.0 | 10.7 | 490 | 3230 | 3650 | 15.0 | 14.3 | 13.7 |
| | | 25 + 60 + 60 | 1.72 | 4.14 | 4.14 | - | - | 2.1 | 10.0 | 10.7 | 490 | 3230 | 3650 | 15.0 | 14.3 | 13.7 |
| | | 25 + 60 + 71 | 1.60 | 3.85 | 4.55 | - | - | 2.1 | 10.0 | 10.7 | 490 | 3230 | 3650 | 15.0 | 14.3 | 13.7 |

| Indoor unit combination | | | Cooling capacity (kW) | | | | | | | | Power consumption(W) | | | Standard current(A) | | |
|---|---|---|---|---|---|---|---|---|---|---|---|---|---|---|---|---|
| | | | Room cooling capacity | | | | | Total capacity | | | | | | | | |
| | | | A | B | C | D | E | Min. | Standard | Max. | Min. | Standard | Max. | 220V | 230V | 240V |
| Cooling operation | 3 room | 35 + 35 + 35 | 3.33 | 3.33 | 3.33 | - | - | 2.1 | 10.0 | 10.7 | 490 | 3230 | 3650 | 15.0 | 14.3 | 13.7 |
| | | 35 + 35 + 50 | 2.92 | 2.92 | 4.17 | - | - | 2.1 | 10.0 | 10.7 | 490 | 3230 | 3650 | 15.0 | 14.3 | 13.7 |
| | | 35 + 35 + 60 | 2.69 | 2.69 | 4.62 | - | - | 2.1 | 10.0 | 10.7 | 490 | 3230 | 3650 | 15.0 | 14.3 | 13.7 |
| | | 35 + 35 + 71 | 2.48 | 2.48 | 5.04 | - | - | 2.1 | 10.0 | 10.7 | 490 | 3230 | 3650 | 15.0 | 14.3 | 13.7 |
| | | 35 + 35 + 80 | 2.33 | 2.33 | 5.33 | - | - | 2.1 | 10.0 | 10.7 | 490 | 3230 | 3650 | 15.0 | 14.3 | 13.7 |
| | | 35 + 50 + 50 | 2.59 | 3.70 | 3.70 | - | - | 2.1 | 10.0 | 10.7 | 490 | 3230 | 3650 | 15.0 | 14.3 | 13.7 |
| | | 35 + 50 + 60 | 2.41 | 3.45 | 4.14 | - | - | 2.1 | 10.0 | 10.7 | 490 | 3230 | 3650 | 15.0 | 14.3 | 13.7 |
| | | 35 + 50 + 71 | 2.24 | 3.21 | 4.55 | - | - | 2.1 | 10.0 | 10.7 | 490 | 3230 | 3650 | 15.0 | 14.3 | 13.7 |
| | | 35 + 60 + 60 | 2.26 | 3.87 | 3.87 | - | - | 2.1 | 10.0 | 10.7 | 490 | 3230 | 3650 | 15.0 | 14.3 | 13.7 |
| | | 50 + 50 + 50 | 3.33 | 3.33 | 3.33 | - | - | 2.1 | 10.0 | 10.7 | 490 | 3230 | 3650 | 15.0 | 14.3 | 13.7 |
| | | 50 + 50 + 60 | 3.13 | 3.13 | 3.75 | - | - | 2.1 | 10.0 | 10.7 | 490 | 3230 | 3650 | 15.0 | 14.3 | 13.7 |
| | 4 room | 20 + 20 + 20 + 20 | 2.00 | 2.00 | 2.00 | 2.00 | - | 2.3 | 8.0 | 8.8 | 485 | 2020 | 2330 | 9.4 | 9.0 | 8.6 |
| | | 20 + 20 + 20 + 25 | 2.00 | 2.00 | 2.00 | 2.50 | - | 2.3 | 8.5 | 9.4 | 485 | 2210 | 2590 | 10.3 | 9.8 | 9.4 |
| | | 20 + 20 + 20 + 35 | 2.00 | 2.00 | 2.00 | 3.50 | - | 2.3 | 9.5 | 10.5 | 485 | 2640 | 3150 | 12.2 | 11.7 | 11.2 |
| | | 20 + 20 + 20 + 50 | 1.82 | 1.82 | 1.82 | 4.55 | - | 2.3 | 10.0 | 11.3 | 485 | 2950 | 3650 | 13.7 | 13.1 | 12.5 |
| | | 20 + 20 + 20 + 60 | 1.67 | 1.67 | 1.67 | 5.00 | - | 2.3 | 10.0 | 11.3 | 485 | 2950 | 3650 | 13.7 | 13.1 | 12.5 |
| | | 20 + 20 + 20 + 71 | 1.53 | 1.53 | 1.53 | 5.42 | - | 2.3 | 10.0 | 11.3 | 485 | 2950 | 3650 | 13.7 | 13.1 | 12.5 |
| | | 20 + 20 + 20 + 80 | 1.43 | 1.43 | 1.43 | 5.71 | - | 2.3 | 10.0 | 11.3 | 485 | 2950 | 3650 | 13.7 | 13.1 | 12.5 |
| | | 20 + 20 + 25 + 25 | 2.00 | 2.00 | 2.50 | 2.50 | - | 2.3 | 9.0 | 9.9 | 485 | 2420 | 2830 | 11.2 | 10.7 | 10.3 |
| | | 20 + 20 + 25 + 35 | 2.00 | 2.00 | 2.50 | 3.50 | - | 2.3 | 10.0 | 11.3 | 485 | 2950 | 3650 | 13.7 | 13.1 | 12.5 |
| | | 20 + 20 + 25 + 50 | 1.74 | 1.74 | 2.17 | 4.35 | - | 2.3 | 10.0 | 11.3 | 485 | 2950 | 3650 | 13.7 | 13.1 | 12.5 |
| | | 20 + 20 + 25 + 60 | 1.60 | 1.60 | 2.00 | 4.80 | - | 2.3 | 10.0 | 11.3 | 485 | 2950 | 3650 | 13.7 | 13.1 | 12.5 |
| | | 20 + 20 + 25 + 71 | 1.47 | 1.47 | 1.84 | 5.22 | - | 2.3 | 10.0 | 11.3 | 485 | 2950 | 3650 | 13.7 | 13.1 | 12.5 |
| | | 20 + 20 + 25 + 80 | 1.38 | 1.38 | 1.72 | 5.52 | - | 2.3 | 10.0 | 11.3 | 485 | 2950 | 3650 | 13.7 | 13.1 | 12.5 |
| | | 20 + 20 + 35 + 35 | 1.82 | 1.82 | 3.18 | 3.18 | - | 2.3 | 10.0 | 11.3 | 485 | 2950 | 3650 | 13.7 | 13.1 | 12.5 |
| | | 20 + 20 + 35 + 50 | 1.60 | 1.60 | 2.80 | 4.00 | - | 2.3 | 10.0 | 11.3 | 485 | 2950 | 3650 | 13.7 | 13.1 | 12.5 |
| | | 20 + 20 + 35 + 60 | 1.48 | 1.48 | 2.59 | 4.44 | - | 2.3 | 10.0 | 11.3 | 485 | 2950 | 3650 | 13.7 | 13.1 | 12.5 |
| | | 20 + 20 + 35 + 71 | 1.37 | 1.37 | 2.40 | 4.86 | - | 2.3 | 10.0 | 11.3 | 485 | 2950 | 3650 | 13.7 | 13.1 | 12.5 |
| | | 20 + 20 + 35 + 80 | 1.29 | 1.29 | 2.26 | 5.16 | - | 2.3 | 10.0 | 11.3 | 485 | 2950 | 3650 | 13.7 | 13.1 | 12.5 |
| | | 20 + 20 + 50 + 50 | 1.43 | 1.43 | 3.57 | 3.57 | - | 2.3 | 10.0 | 11.3 | 485 | 2950 | 3650 | 13.7 | 13.1 | 12.5 |
| | | 20 + 20 + 50 + 60 | 1.33 | 1.33 | 3.33 | 4.00 | - | 2.3 | 10.0 | 11.3 | 485 | 2950 | 3650 | 13.7 | 13.1 | 12.5 |
| | | 20 + 20 + 60 + 60 | 1.25 | 1.25 | 3.75 | 3.75 | - | 2.3 | 10.0 | 11.3 | 485 | 2950 | 3650 | 13.7 | 13.1 | 12.5 |
| | | 20 + 25 + 25 + 25 | 2.00 | 2.50 | 2.50 | 2.50 | - | 2.3 | 9.5 | 10.5 | 485 | 2640 | 3150 | 12.2 | 11.7 | 11.2 |
| | | 20 + 25 + 25 + 35 | 1.90 | 2.38 | 2.38 | 3.33 | - | 2.3 | 10.0 | 11.1 | 485 | 2950 | 3650 | 13.7 | 13.1 | 12.5 |
| | | 20 + 25 + 25 + 50 | 1.67 | 2.08 | 2.08 | 4.17 | - | 2.3 | 10.0 | 11.1 | 485 | 2950 | 3650 | 13.7 | 13.1 | 12.5 |
| | | 20 + 25 + 25 + 60 | 1.54 | 1.92 | 1.92 | 4.62 | - | 2.3 | 10.0 | 11.1 | 485 | 2950 | 3650 | 13.7 | 13.1 | 12.5 |
| | | 20 + 25 + 25 + 71 | 1.42 | 1.77 | 1.77 | 5.04 | - | 2.3 | 10.0 | 11.1 | 485 | 2950 | 3650 | 13.7 | 13.1 | 12.5 |
| | | 20 + 25 + 25 + 80 | 1.33 | 1.67 | 1.67 | 5.33 | - | 2.3 | 10.0 | 11.1 | 485 | 2950 | 3650 | 13.7 | 13.1 | 12.5 |
| | | 20 + 25 + 35 + 35 | 1.74 | 2.17 | 3.04 | 3.04 | - | 2.3 | 10.0 | 11.1 | 485 | 2950 | 3650 | 13.7 | 13.1 | 12.5 |
| | | 20 + 25 + 35 + 50 | 1.54 | 1.92 | 2.69 | 3.85 | - | 2.3 | 10.0 | 11.1 | 485 | 2950 | 3650 | 13.7 | 13.1 | 12.5 |
| | | 20 + 25 + 35 + 60 | 1.43 | 1.79 | 2.50 | 4.29 | - | 2.3 | 10.0 | 11.1 | 485 | 2950 | 3650 | 13.7 | 13.1 | 12.5 |
| | | 20 + 25 + 35 + 71 | 1.32 | 1.66 | 2.32 | 4.70 | - | 2.3 | 10.0 | 11.1 | 485 | 2950 | 3650 | 13.7 | 13.1 | 12.5 |
| | | 20 + 25 + 35 + 80 | 1.25 | 1.56 | 2.19 | 5.00 | - | 2.3 | 10.0 | 11.1 | 485 | 2950 | 3650 | 13.7 | 13.1 | 12.5 |
| | | 20 + 25 + 50 + 50 | 1.38 | 1.72 | 3.45 | 3.45 | - | 2.3 | 10.0 | 11.1 | 485 | 2950 | 3650 | 13.7 | 13.1 | 12.5 |
| | | 20 + 25 + 50 + 60 | 1.29 | 1.61 | 3.23 | 3.87 | - | 2.3 | 10.0 | 11.1 | 485 | 2950 | 3650 | 13.7 | 13.1 | 12.5 |
| | | 20 + 35 + 35 + 35 | 1.60 | 2.80 | 2.80 | 2.80 | - | 2.3 | 10.0 | 11.1 | 485 | 2950 | 3650 | 13.7 | 13.1 | 12.5 |
| | | 20 + 35 + 35 + 50 | 1.43 | 2.50 | 2.50 | 3.57 | - | 2.3 | 10.0 | 11.1 | 485 | 2950 | 3650 | 13.7 | 13.1 | 12.5 |
| | | 20 + 35 + 35 + 60 | 1.33 | 2.33 | 2.33 | 4.00 | - | 2.3 | 10.0 | 11.1 | 485 | 2950 | 3650 | 13.7 | 13.1 | 12.5 |
| | | 20 + 35 + 50 + 50 | 1.29 | 2.26 | 3.23 | 3.23 | - | 2.3 | 10.0 | 11.1 | 485 | 2950 | 3650 | 13.7 | 13.1 | 12.5 |
| | | 25 + 25 + 25 + 25 | 2.50 | 2.50 | 2.50 | 2.50 | - | 2.3 | 10.0 | 11.1 | 485 | 2950 | 3650 | 13.7 | 13.1 | 12.5 |
| | | 25 + 25 + 25 + 35 | 2.27 | 2.27 | 2.27 | 3.18 | - | 2.3 | 10.0 | 11.1 | 485 | 2950 | 3650 | 13.7 | 13.1 | 12.5 |
| | | 25 + 25 + 25 + 50 | 2.00 | 2.00 | 2.00 | 4.00 | - | 2.3 | 10.0 | 11.1 | 485 | 2950 | 3650 | 13.7 | 13.1 | 12.5 |
| | | 25 + 25 + 25 + 60 | 1.85 | 1.85 | 1.85 | 4.44 | - | 2.3 | 10.0 | 11.1 | 485 | 2950 | 3650 | 13.7 | 13.1 | 12.5 |
| | | 25 + 25 + 25 + 71 | 1.71 | 1.71 | 1.71 | 4.86 | - | 2.3 | 10.0 | 11.1 | 485 | 2950 | 3650 | 13.7 | 13.1 | 12.5 |
| | | 25 + 25 + 25 + 80 | 1.61 | 1.61 | 1.61 | 5.16 | - | 2.3 | 10.0 | 11.1 | 485 | 2950 | 3650 | 13.7 | 13.1 | 12.5 |
| | | 25 + 25 + 35 + 35 | 2.08 | 2.08 | 2.92 | 2.92 | - | 2.3 | 10.0 | 11.1 | 485 | 2950 | 3650 | 13.7 | 13.1 | 12.5 |
| | | 25 + 25 + 35 + 50 | 1.85 | 1.85 | 2.59 | 3.70 | - | 2.3 | 10.0 | 11.1 | 485 | 2950 | 3650 | 13.7 | 13.1 | 12.5 |
| | | 25 + 25 + 35 + 60 | 1.72 | 1.72 | 2.41 | 4.14 | - | 2.3 | 10.0 | 11.1 | 485 | 2950 | 3650 | 13.7 | 13.1 | 12.5 |
| | | 25 + 25 + 35 + 71 | 1.60 | 1.60 | 2.24 | 4.55 | - | 2.3 | 10.0 | 11.1 | 485 | 2950 | 3650 | 13.7 | 13.1 | 12.5 |
| | | 25 + 25 + 50 + 50 | 1.67 | 1.67 | 3.33 | 3.33 | - | 2.3 | 10.0 | 11.1 | 485 | 2950 | 3650 | 13.7 | 13.1 | 12.5 |
| | | 25 + 25 + 50 + 60 | 1.56 | 1.56 | 3.13 | 3.75 | - | 2.3 | 10.0 | 11.1 | 485 | 2950 | 3650 | 13.7 | 13.1 | 12.5 |
| | | 25 + 35 + 35 + 35 | 1.92 | 2.69 | 2.69 | 2.69 | - | 2.3 | 10.0 | 11.1 | 485 | 2950 | 3650 | 13.7 | 13.1 | 12.5 |
| | | 25 + 35 + 35 + 50 | 1.72 | 2.41 | 2.41 | 3.45 | - | 2.3 | 10.0 | 11.1 | 485 | 2950 | 3650 | 13.7 | 13.1 | 12.5 |
| | | 25 + 35 + 35 + 60 | 1.61 | 2.26 | 2.26 | 3.87 | - | 2.3 | 10.0 | 11.1 | 485 | 2950 | 3650 | 13.7 | 13.1 | 12.5 |
| | | 25 + 35 + 50 + 50 | 1.56 | 2.19 | 3.13 | 3.13 | - | 2.3 | 10.0 | 11.1 | 485 | 2950 | 3650 | 13.7 | 13.1 | 12.5 |
| | | 35 + 35 + 35 + 35 | 2.50 | 2.50 | 2.50 | 2.50 | - | 2.3 | 10.0 | 11.1 | 485 | 2950 | 3650 | 13.7 | 13.1 | 12.5 |
| | | 35 + 35 + 35 + 50 | 2.26 | 2.26 | 2.26 | 3.23 | - | 2.3 | 10.0 | 11.1 | 485 | 2950 | 3650 | 13.7 | 13.1 | 12.5 |
| | 5 room | 20 + 20 + 20 + 20 + 20 | 2.00 | 2.00 | 2.00 | 2.00 | 2.00 | 2.5 | 10.0 | 11.5 | 480 | 2700 | 3650 | 12.4 | 11.9 | 11.4 |
| | | 20 + 20 + 20 + 20 + 25 | 1.90 | 1.90 | 1.90 | 1.90 | 2.38 | 2.5 | 10.0 | 11.5 | 480 | 2700 | 3650 | 12.4 | 11.9 | 11.4 |
| | | 20 + 20 + 20 + 20 + 35 | 1.74 | 1.74 | 1.74 | 1.74 | 3.04 | 2.5 | 10.0 | 11.5 | 480 | 2700 | 3650 | 12.4 | 11.9 | 11.4 |
| | | 20 + 20 + 20 + 20 + 50 | 1.54 | 1.54 | 1.54 | 1.54 | 3.85 | 2.5 | 10.0 | 11.5 | 480 | 2700 | 3650 | 12.4 | 11.9 | 11.4 |
| | | 20 + 20 + 20 + 20 + 60 | 1.43 | 1.43 | 1.43 | 1.43 | 4.29 | 2.5 | 10.0 | 11.5 | 480 | 2700 | 3650 | 12.4 | 11.9 | 11.4 |
| | | 20 + 20 + 20 + 25 + 25 | 1.82 | 1.82 | 1.82 | 2.27 | 2.27 | 2.5 | 10.0 | 11.5 | 480 | 2700 | 3650 | 12.4 | 11.9 | 11.4 |
| | | 20 + 20 + 20 + 25 + 35 | 1.67 | 1.67 | 1.67 | 2.08 | 2.92 | 2.5 | 10.0 | 11.5 | 480 | 2700 | 3650 | 12.4 | 11.9 | 11.4 |
| | | 20 + 20 + 20 + 25 + 50 | 1.48 | 1.48 | 1.48 | 1.85 | 3.70 | 2.5 | 10.0 | 11.5 | 480 | 2700 | 3650 | 12.4 | 11.9 | 11.4 |

# MULTI-SPLIT SYSTEM

| Indoor unit combination | | | Cooling capacity (kW) | | | | | | | | Power consumption(W) | | | Standard current(A) | | |
|---|---|---|---|---|---|---|---|---|---|---|---|---|---|---|---|---|
| | | | Room cooling capacity | | | | | Total capacity | | | | | | | | |
| | | | A | B | C | D | E | Min. | Standard | Max. | Min. | Standard | Max. | 220V | 230V | 240V |
| Cooling operation | 5 room | 20 + 20 + 20 + 25 + 60 | 1.38 | 1.38 | 1.38 | 1.72 | 4.14 | 2.5 | 10.0 | 11.5 | 480 | 2700 | 3650 | 12.4 | 11.9 | 11.4 |
| | | 20 + 20 + 20 + 35 + 35 | 1.54 | 1.54 | 1.54 | 2.69 | 2.69 | 2.5 | 10.0 | 11.5 | 480 | 2700 | 3650 | 12.4 | 11.9 | 11.4 |
| | | 20 + 20 + 20 + 35 + 50 | 1.38 | 1.38 | 1.38 | 2.41 | 3.45 | 2.5 | 10.0 | 11.5 | 480 | 2700 | 3650 | 12.4 | 11.9 | 11.4 |
| | | 20 + 20 + 20 + 35 + 60 | 1.29 | 1.29 | 1.29 | 2.26 | 3.87 | 2.5 | 10.0 | 11.5 | 480 | 2700 | 3650 | 12.4 | 11.9 | 11.4 |
| | | 20 + 20 + 25 + 25 + 25 | 1.74 | 1.74 | 2.17 | 2.17 | 2.17 | 2.5 | 10.0 | 11.5 | 480 | 2700 | 3650 | 12.4 | 11.9 | 11.4 |
| | | 20 + 20 + 25 + 25 + 35 | 1.60 | 1.60 | 2.00 | 2.00 | 2.80 | 2.5 | 10.0 | 11.5 | 480 | 2700 | 3650 | 12.4 | 11.9 | 11.4 |
| | | 20 + 20 + 25 + 25 + 50 | 1.43 | 1.43 | 1.79 | 1.79 | 3.57 | 2.5 | 10.0 | 11.5 | 480 | 2700 | 3650 | 12.4 | 11.9 | 11.4 |
| | | 20 + 20 + 25 + 25 + 60 | 1.33 | 1.33 | 1.67 | 1.67 | 4.00 | 2.5 | 10.0 | 11.5 | 480 | 2700 | 3650 | 12.4 | 11.9 | 11.4 |
| | | 20 + 20 + 25 + 35 + 35 | 1.48 | 1.48 | 1.85 | 2.59 | 2.59 | 2.5 | 10.0 | 11.5 | 480 | 2700 | 3650 | 12.4 | 11.9 | 11.4 |
| | | 20 + 20 + 25 + 35 + 50 | 1.33 | 1.33 | 1.67 | 2.33 | 3.33 | 2.5 | 10.0 | 11.5 | 480 | 2700 | 3650 | 12.4 | 11.9 | 11.4 |
| | | 20 + 20 + 25 + 35 + 60 | 1.25 | 1.25 | 1.56 | 2.19 | 3.75 | 2.5 | 10.0 | 11.5 | 480 | 2700 | 3650 | 12.4 | 11.9 | 11.4 |
| | | 20 + 20 + 35 + 35 + 35 | 1.38 | 1.38 | 2.41 | 2.41 | 2.41 | 2.5 | 10.0 | 11.5 | 480 | 2700 | 3650 | 12.4 | 11.9 | 11.4 |
| | | 20 + 20 + 35 + 35 + 50 | 1.25 | 1.25 | 2.19 | 2.19 | 3.13 | 2.5 | 10.0 | 11.5 | 480 | 2700 | 3650 | 12.4 | 11.9 | 11.4 |
| | | 20 + 25 + 25 + 25 + 25 | 1.67 | 2.08 | 2.08 | 2.08 | 2.08 | 2.5 | 10.0 | 11.5 | 480 | 2700 | 3650 | 12.4 | 11.9 | 11.4 |
| | | 20 + 25 + 25 + 25 + 35 | 1.54 | 1.92 | 1.92 | 1.92 | 2.69 | 2.5 | 10.0 | 11.5 | 480 | 2700 | 3650 | 12.4 | 11.9 | 11.4 |
| | | 20 + 25 + 25 + 25 + 50 | 1.38 | 1.72 | 1.72 | 1.72 | 3.45 | 2.5 | 10.0 | 11.5 | 480 | 2700 | 3650 | 12.4 | 11.9 | 11.4 |
| | | 20 + 25 + 25 + 25 + 60 | 1.29 | 1.61 | 1.61 | 1.61 | 3.87 | 2.5 | 10.0 | 11.5 | 480 | 2700 | 3650 | 12.4 | 11.9 | 11.4 |
| | | 20 + 25 + 25 + 35 + 35 | 1.43 | 1.79 | 1.79 | 2.50 | 2.50 | 2.5 | 10.0 | 11.5 | 480 | 2700 | 3650 | 12.4 | 11.9 | 11.4 |
| | | 20 + 25 + 25 + 35 + 50 | 1.29 | 1.61 | 1.61 | 2.26 | 3.23 | 2.5 | 10.0 | 11.5 | 480 | 2700 | 3650 | 12.4 | 11.9 | 11.4 |
| | | 20 + 25 + 35 + 35 + 35 | 1.33 | 1.67 | 2.33 | 2.33 | 2.33 | 2.5 | 10.0 | 11.5 | 480 | 2700 | 3650 | 12.4 | 11.9 | 11.4 |
| | | 20 + 35 + 35 + 35 + 35 | 1.25 | 2.19 | 2.19 | 2.19 | 2.19 | 2.5 | 10.0 | 11.5 | 480 | 2700 | 3650 | 12.4 | 11.9 | 11.4 |
| | | 25 + 25 + 25 + 25 + 25 | 2.00 | 2.00 | 2.00 | 2.00 | 2.00 | 2.5 | 10.0 | 11.5 | 480 | 2700 | 3650 | 12.4 | 11.9 | 11.4 |
| | | 25 + 25 + 25 + 25 + 35 | 1.85 | 1.85 | 1.85 | 1.85 | 2.59 | 2.5 | 10.0 | 11.5 | 480 | 2700 | 3650 | 12.4 | 11.9 | 11.4 |
| | | 25 + 25 + 25 + 25 + 50 | 1.67 | 1.67 | 1.67 | 1.67 | 3.33 | 2.5 | 10.0 | 11.5 | 480 | 2700 | 3650 | 12.4 | 11.9 | 11.4 |
| | | 25 + 25 + 25 + 25 + 60 | 1.56 | 1.56 | 1.56 | 1.56 | 3.75 | 2.5 | 10.0 | 11.5 | 480 | 2700 | 3650 | 12.4 | 11.9 | 11.4 |
| | | 25 + 25 + 25 + 35 + 35 | 1.72 | 1.72 | 1.72 | 2.41 | 2.41 | 2.5 | 10.0 | 11.5 | 480 | 2700 | 3650 | 12.4 | 11.9 | 11.4 |
| | | 25 + 25 + 25 + 35 + 50 | 1.56 | 1.56 | 1.56 | 2.19 | 3.13 | 2.5 | 10.0 | 11.5 | 480 | 2700 | 3650 | 12.4 | 11.9 | 11.4 |
| | | 25 + 25 + 35 + 35 + 35 | 1.61 | 1.61 | 2.26 | 2.26 | 2.26 | 2.5 | 10.0 | 11.5 | 480 | 2700 | 3650 | 12.4 | 11.9 | 11.4 |

## SCM40ZS-S Table of Indoor unit combination only with SRK-ZSX type

| Indoor unit combination | | | Heating capacity (kW) | | | | | Power consumption(W) | | | Standard current(A) | | |
|---|---|---|---|---|---|---|---|---|---|---|---|---|---|
| | | | Room heating capacity | | Total capacity | | | | | | | | |
| | | | A | B | Min. | Standard | Max. | Min. | Standard | Max. | 220V | 230V | 240V |
| Heating operation | 1*1 room | 20 | 3.0 | - | 1.3 | 3.0 | 3.7 | 520 | 750 | 1070 | 3.7 | 3.5 | 3.4 |
| | | 25 | 3.4 | - | 1.3 | 3.4 | 4.2 | 520 | 920 | 1210 | 4.5 | 4.3 | 4.1 |
| | | 35 | 4.5 | - | 1.3 | 4.5 | 5.0 | 520 | 1210 | 1450 | 5.9 | 5.6 | 5.4 |
| | 2*2 room | 20 + 20 | 2.25 | 2.25 | 2.0 | 4.5 | 6.3 | 550 | 900 | 1700 | 4.4 | 4.2 | 4.0 |
| | | 20 + 25 | 2.36 | 2.94 | 2.0 | 5.3 | 6.3 | 550 | 1150 | 1700 | 5.4 | 5.2 | 5.0 |
| | | 20 + 35 | 2.11 | 3.69 | 2.0 | 5.8 | 6.3 | 550 | 1290 | 1700 | 6.0 | 5.8 | 5.5 |
| | | 25 + 25 | 2.90 | 2.90 | 2.0 | 5.8 | 6.3 | 550 | 1290 | 1700 | 6.0 | 5.8 | 5.5 |
| | | 25 + 35 | 2.42 | 3.38 | 2.0 | 5.8 | 6.3 | 550 | 1290 | 1700 | 6.0 | 5.8 | 5.5 |

The values are for 1 indoor unit (*1) and 2 indoor units (*2) operation.
The same hereinafter.

| Indoor unit combination | | | Cooling capacity (kW) | | | | | Power consumption(W) | | | Standard current(A) | | |
|---|---|---|---|---|---|---|---|---|---|---|---|---|---|
| | | | Room cooling capacity | | Total capacity | | | | | | | | |
| | | | A | B | Min. | Standard | Max. | Min. | Standard | Max. | 220V | 230V | 240V |
| Cooling operation | 1 room | 20 | 2.0 | - | 1.5 | 2.0 | 2.8 | 560 | 590 | 880 | 2.9 | 2.8 | 2.7 |
| | | 25 | 2.5 | - | 1.5 | 2.5 | 3.4 | 560 | 670 | 1040 | 3.3 | 3.2 | 3.1 |
| | | 35 | 3.5 | - | 1.5 | 3.5 | 3.9 | 560 | 970 | 1200 | 4.8 | 4.6 | 4.4 |
| | 2 room | 20 + 20 | 2.00 | 2.00 | 3.0 | 4.0 | 5.7 | 600 | 840 | 1750 | 4.2 | 4.0 | 3.8 |
| | | 20 + 25 | 2.00 | 2.50 | 3.0 | 4.5 | 5.9 | 600 | 1040 | 2030 | 5.0 | 4.8 | 4.6 |
| | | 20 + 35 | 1.89 | 3.31 | 3.0 | 5.2 | 5.9 | 600 | 1430 | 2030 | 6.7 | 6.4 | 6.2 |
| | | 25 + 25 | 2.50 | 2.50 | 3.0 | 5.0 | 5.9 | 600 | 1280 | 2030 | 6.1 | 5.8 | 5.6 |
| | | 25 + 35 | 2.17 | 3.03 | 3.0 | 5.2 | 5.9 | 600 | 1430 | 2030 | 6.7 | 6.4 | 6.2 |

## SCM40ZS-S Table of Indoor unit combination only with SKM-ZSP type

| Indoor unit combination | | | Heating capacity (kW) | | | | | Power consumption(W) | | | Standard current(A) | | |
|---|---|---|---|---|---|---|---|---|---|---|---|---|---|
| | | | Room heating capacity | | Total capacity | | | | | | | | |
| | | | A | B | Min. | Standard | Max. | Min. | Standard | Max. | 220V | 230V | 240V |
| Heating operation | 1 room | 20 | 3.0 | - | 1.3 | 3.0 | 3.5 | 520 | 950 | 1070 | 4.6 | 4.4 | 4.2 |
| | | 25 | 3.4 | - | 1.3 | 3.4 | 4.0 | 520 | 1020 | 1210 | 5.0 | 4.8 | 4.6 |
| | | 35 | 4.5 | - | 1.3 | 4.5 | 4.8 | 520 | 1390 | 1450 | 6.8 | 6.5 | 6.2 |
| | 2 room | 20 + 20 | 2.25 | 2.25 | 2.0 | 4.5 | 6.1 | 550 | 1020 | 1700 | 5.0 | 4.8 | 4.6 |
| | | 20 + 25 | 2.36 | 2.94 | 2.0 | 5.3 | 6.1 | 550 | 1310 | 1700 | 6.2 | 5.9 | 5.7 |
| | | 20 + 35 | 2.11 | 3.69 | 2.0 | 5.8 | 6.1 | 550 | 1400 | 1700 | 6.5 | 6.3 | 6.0 |
| | | 25 + 25 | 2.90 | 2.90 | 2.0 | 5.8 | 6.1 | 550 | 1400 | 1700 | 6.5 | 6.3 | 6.0 |
| | | 25 + 35 | 2.42 | 3.38 | 2.0 | 5.8 | 6.1 | 550 | 1400 | 1700 | 6.5 | 6.3 | 6.0 |

| Indoor unit combination | | | Cooling capacity (kW) | | | | | Power consumption(W) | | | Standard current(A) | | |
|---|---|---|---|---|---|---|---|---|---|---|---|---|---|
| | | | Room cooling capacity | | Total capacity | | | | | | | | |
| | | | A | B | Min. | Standard | Max. | Min. | Standard | Max. | 220V | 230V | 240V |
| Cooling operation | 1 room | 20 | 2.0 | - | 1.5 | 2.0 | 2.7 | 560 | 650 | 880 | 3.2 | 3.1 | 3.0 |
| | | 25 | 2.5 | - | 1.5 | 2.5 | 3.2 | 560 | 830 | 1040 | 4.1 | 4.0 | 3.8 |
| | | 35 | 3.5 | - | 1.5 | 3.5 | 3.7 | 560 | 1100 | 1200 | 5.5 | 5.2 | 5.0 |
| | 2 room | 20 + 20 | 2.00 | 2.00 | 3.0 | 4.0 | 5.6 | 600 | 1050 | 1750 | 5.2 | 5.0 | 4.8 |
| | | 20 + 25 | 2.00 | 2.50 | 3.0 | 4.5 | 5.8 | 600 | 1300 | 2030 | 6.3 | 6.0 | 5.8 |
| | | 20 + 35 | 1.89 | 3.31 | 3.0 | 5.2 | 5.8 | 600 | 1600 | 2030 | 7.5 | 7.2 | 6.9 |
| | | 25 + 25 | 2.50 | 2.50 | 3.0 | 5.0 | 5.8 | 600 | 1420 | 2030 | 6.7 | 6.4 | 6.2 |
| | | 25 + 35 | 2.17 | 3.03 | 3.0 | 5.2 | 5.8 | 600 | 1600 | 2030 | 7.5 | 7.2 | 6.9 |

## SCM40ZS-S Table of Indoor unit combination with other indoor unit

| Indoor unit combination | | | Heating capacity (kW) | | | | | Power consumption(W) | | | Standard current(A) | | |
|---|---|---|---|---|---|---|---|---|---|---|---|---|---|
| | | | Room heating capacity | | Total capacity | | | | | | | | |
| | | | A | B | Min. | Standard | Max. | Min. | Standard | Max. | 220V | 230V | 240V |
| Heating operation | 1 room | 20 | 3.0 | - | 1.3 | 3.0 | 3.5 | 520 | 900 | 1070 | 4.4 | 4.2 | 4.0 |
| | | 25 | 3.4 | - | 1.3 | 3.4 | 4.0 | 520 | 1070 | 1210 | 5.2 | 5.0 | 4.8 |
| | | 35 | 4.5 | - | 1.3 | 4.5 | 4.8 | 520 | 1340 | 1450 | 6.5 | 6.3 | 6.0 |
| | 2 room | 20 + 20 | 2.25 | 2.25 | 2.0 | 4.5 | 6.1 | 550 | 930 | 1700 | 4.5 | 4.3 | 4.2 |
| | | 20 + 25 | 2.36 | 2.94 | 2.0 | 5.3 | 6.1 | 550 | 1240 | 1700 | 5.9 | 5.6 | 5.4 |
| | | 20 + 35 | 2.11 | 3.69 | 2.0 | 5.8 | 6.1 | 550 | 1330 | 1700 | 6.2 | 5.9 | 5.7 |
| | | 25 + 25 | 2.90 | 2.90 | 2.0 | 5.8 | 6.1 | 550 | 1330 | 1700 | 6.2 | 5.9 | 5.7 |
| | | 25 + 35 | 2.42 | 3.38 | 2.0 | 5.8 | 6.1 | 550 | 1330 | 1700 | 6.2 | 5.9 | 5.7 |

| Indoor unit combination | | | Cooling capacity (kW) | | | | | Power consumption(W) | | | Standard current(A) | | |
|---|---|---|---|---|---|---|---|---|---|---|---|---|---|
| | | | Room cooling capacity | | Total capacity | | | | | | | | |
| | | | A | B | Min. | Standard | Max. | Min. | Standard | Max. | 220V | 230V | 240V |
| Cooling operation | 1 room | 20 | 2.0 | - | 1.5 | 2.0 | 2.7 | 560 | 620 | 880 | 3.1 | 3.0 | 2.8 |
| | | 25 | 2.5 | - | 1.5 | 2.5 | 3.2 | 560 | 710 | 1040 | 3.5 | 3.4 | 3.2 |
| | | 35 | 3.5 | - | 1.5 | 3.5 | 3.7 | 560 | 1030 | 1200 | 5.1 | 4.9 | 4.7 |
| | 2 room | 20 + 20 | 2.00 | 2.00 | 3.0 | 4.0 | 5.6 | 600 | 880 | 1750 | 4.4 | 4.2 | 4.0 |
| | | 20 + 25 | 2.00 | 2.50 | 3.0 | 4.5 | 5.8 | 600 | 1090 | 2030 | 5.3 | 5.0 | 4.8 |
| | | 20 + 35 | 1.89 | 3.31 | 3.0 | 5.2 | 5.8 | 600 | 1500 | 2030 | 7.0 | 6.7 | 6.5 |
| | | 25 + 25 | 2.50 | 2.50 | 3.0 | 5.0 | 5.8 | 600 | 1340 | 2030 | 6.4 | 6.1 | 5.8 |
| | | 25 + 35 | 2.17 | 3.03 | 3.0 | 5.2 | 5.8 | 600 | 1500 | 2030 | 7.0 | 6.7 | 6.5 |

R410A

# MULTI-SPLIT SYSTEM

## SCM45ZS-S Table of Indoor unit combination only with SRK-ZSX type

| Indoor unit combination | | | Heating capacity (kW) | | | | | Power consumption(W) | | | Standard current(A) | | |
|---|---|---|---|---|---|---|---|---|---|---|---|---|---|
| | | | Room heating capacity | | Total capacity | | | | | | | | |
| | | | A | B | Min. | Standard | Max. | Min. | Standard | Max. | 220V | 230V | 240V |
| Heating operation | 1 room | 20 | 3.0 | - | 1.3 | 3.0 | 3.7 | 520 | 750 | 1070 | 3.7 | 3.5 | 3.4 |
| | | 25 | 3.4 | - | 1.3 | 3.4 | 4.2 | 520 | 920 | 1210 | 4.5 | 4.3 | 4.1 |
| | | 35 | 4.5 | - | 1.3 | 4.5 | 5.0 | 520 | 1210 | 1450 | 5.9 | 5.6 | 5.4 |
| | 2 room | 20 + 20 | 2.25 | 2.25 | 2.0 | 4.5 | 6.5 | 550 | 900 | 1900 | 4.4 | 4.2 | 4.0 |
| | | 20 + 25 | 2.36 | 2.94 | 2.0 | 5.3 | 6.5 | 550 | 1150 | 1900 | 5.4 | 5.2 | 5.0 |
| | | 20 + 35 | 2.18 | 3.82 | 2.0 | 6.0 | 6.5 | 550 | 1500 | 1900 | 6.9 | 6.6 | 6.3 |
| | | 25 + 25 | 3.00 | 3.00 | 2.0 | 6.0 | 6.5 | 550 | 1500 | 1900 | 6.9 | 6.6 | 6.3 |
| | | 25 + 35 | 2.50 | 3.50 | 2.0 | 6.0 | 6.5 | 550 | 1500 | 1900 | 6.9 | 6.6 | 6.3 |
| | | 35 + 35 | 3.00 | 3.00 | 2.0 | 6.0 | 6.5 | 550 | 1500 | 1900 | 6.9 | 6.6 | 6.3 |

| Indoor unit combination | | | Cooling capacity (kW) | | | | | Power consumption(W) | | | Standard current(A) | | |
|---|---|---|---|---|---|---|---|---|---|---|---|---|---|
| | | | Room cooling capacity | | Total capacity | | | | | | | | |
| | | | A | B | Min. | Standard | Max. | Min. | Standard | Max. | 220V | 230V | 240V |
| Cooling operation | 1 room | 20 | 2.0 | - | 1.5 | 2.0 | 2.8 | 560 | 590 | 880 | 2.9 | 2.8 | 2.7 |
| | | 25 | 2.5 | - | 1.5 | 2.5 | 3.4 | 560 | 670 | 1040 | 3.3 | 3.2 | 3.1 |
| | | 35 | 3.5 | - | 1.5 | 3.5 | 3.9 | 560 | 970 | 1200 | 4.8 | 4.6 | 4.4 |
| | 2 room | 20 + 20 | 2.00 | 2.00 | 3.0 | 4.0 | 5.7 | 600 | 840 | 1750 | 4.2 | 4.0 | 3.8 |
| | | 20 + 25 | 2.00 | 2.50 | 3.0 | 4.5 | 5.9 | 600 | 1040 | 2030 | 5.0 | 4.8 | 4.6 |
| | | 20 + 35 | 2.00 | 3.50 | 3.0 | 5.5 | 6.3 | 600 | 1490 | 2160 | 7.0 | 6.7 | 6.4 |
| | | 25 + 25 | 2.50 | 2.50 | 3.0 | 5.0 | 6.2 | 600 | 1280 | 2110 | 6.1 | 5.8 | 5.6 |
| | | 25 + 35 | 2.42 | 3.38 | 3.0 | 5.8 | 6.4 | 600 | 1740 | 2200 | 8.0 | 7.6 | 7.3 |
| | | 35 + 35 | 2.90 | 2.90 | 3.0 | 5.8 | 6.4 | 600 | 1740 | 2200 | 8.0 | 7.6 | 7.3 |

## SCM45ZS-S Table of Indoor unit combination only with SKM-ZSP type

| Indoor unit combination | | | Heating capacity (kW) | | | | | Power consumption(W) | | | Standard current(A) | | |
|---|---|---|---|---|---|---|---|---|---|---|---|---|---|
| | | | Room heating capacity | | Total capacity | | | | | | | | |
| | | | A | B | Min. | Standard | Max. | Min. | Standard | Max. | 220V | 230V | 240V |
| Heating operation | 1 room | 20 | 3.0 | - | 1.3 | 3.0 | 3.5 | 520 | 950 | 1070 | 4.6 | 4.4 | 4.2 |
| | | 25 | 3.4 | - | 1.3 | 3.4 | 4.0 | 520 | 1020 | 1210 | 5.0 | 4.8 | 4.6 |
| | | 35 | 4.5 | - | 1.3 | 4.5 | 4.8 | 520 | 1390 | 1450 | 6.8 | 6.5 | 6.2 |
| | 2 room | 20 + 20 | 2.25 | 2.25 | 2.0 | 4.5 | 6.3 | 550 | 1020 | 1900 | 5.0 | 4.8 | 4.6 |
| | | 20 + 25 | 2.36 | 2.94 | 2.0 | 5.3 | 6.3 | 550 | 1310 | 1900 | 6.4 | 6.1 | 5.9 |
| | | 20 + 35 | 2.18 | 3.82 | 2.0 | 6.0 | 6.3 | 550 | 1600 | 1900 | 7.3 | 7.0 | 6.7 |
| | | 25 + 25 | 3.00 | 3.00 | 2.0 | 6.0 | 6.3 | 550 | 1600 | 1900 | 7.3 | 7.0 | 6.7 |
| | | 25 + 35 | 2.50 | 3.50 | 2.0 | 6.0 | 6.3 | 550 | 1600 | 1900 | 7.3 | 7.0 | 6.7 |
| | | 35 + 35 | 3.00 | 3.00 | 2.0 | 6.0 | 6.3 | 550 | 1600 | 1900 | 7.3 | 7.0 | 6.7 |

| Indoor unit combination | | | Cooling capacity (kW) | | | | | Power consumption(W) | | | Standard current(A) | | |
|---|---|---|---|---|---|---|---|---|---|---|---|---|---|
| | | | Room cooling capacity | | Total capacity | | | | | | | | |
| | | | A | B | Min. | Standard | Max. | Min. | Standard | Max. | 220V | 230V | 240V |
| Cooling operation | 1 room | 20 | 2.0 | - | 1.5 | 2.0 | 2.7 | 560 | 650 | 880 | 3.2 | 3.1 | 3.0 |
| | | 25 | 2.5 | - | 1.5 | 2.5 | 3.2 | 560 | 830 | 1040 | 4.1 | 4.0 | 3.8 |
| | | 35 | 3.5 | - | 1.5 | 3.5 | 3.7 | 560 | 1100 | 1200 | 5.5 | 5.2 | 5.0 |
| | 2 room | 20 + 20 | 2.00 | 2.00 | 3.0 | 4.0 | 5.6 | 600 | 1050 | 1750 | 5.2 | 5.0 | 4.8 |
| | | 20 + 25 | 2.00 | 2.50 | 3.0 | 4.5 | 5.8 | 600 | 1300 | 2030 | 6.3 | 6.0 | 5.8 |
| | | 20 + 35 | 2.00 | 3.50 | 3.0 | 5.5 | 6.2 | 600 | 1650 | 2160 | 7.7 | 7.4 | 7.1 |
| | | 25 + 25 | 2.50 | 2.50 | 3.0 | 5.0 | 6.1 | 600 | 1380 | 2110 | 6.5 | 6.3 | 6.0 |
| | | 25 + 35 | 2.42 | 3.38 | 3.0 | 5.8 | 6.3 | 600 | 1900 | 2200 | 8.7 | 8.3 | 8.0 |
| | | 35 + 35 | 2.90 | 2.90 | 3.0 | 5.8 | 6.3 | 600 | 1900 | 2200 | 8.7 | 8.3 | 8.0 |

## SCM45ZS-S Table of Indoor unit combination with other indoor unit

| Indoor unit combination | | | Heating capacity (kW) | | | | | Power consumption(W) | | | Standard current(A) | | |
|---|---|---|---|---|---|---|---|---|---|---|---|---|---|
| | | | Room heating capacity | | Total capacity | | | | | | | | |
| | | | A | B | Min. | Standard | Max. | Min. | Standard | Max. | 220V | 230V | 240V |
| Heating operation | 1 room | 20 | 3.0 | - | 1.3 | 3.0 | 3.5 | 520 | 900 | 1070 | 4.4 | 4.2 | 4.0 |
| | | 25 | 3.4 | - | 1.3 | 3.4 | 4.0 | 520 | 1070 | 1210 | 5.2 | 5.0 | 4.8 |
| | | 35 | 4.5 | - | 1.3 | 4.5 | 4.8 | 520 | 1340 | 1450 | 6.5 | 6.3 | 6.0 |
| | 2 room | 20 + 20 | 2.25 | 2.25 | 2.0 | 4.5 | 6.3 | 550 | 930 | 1900 | 4.5 | 4.3 | 4.2 |
| | | 20 + 25 | 2.36 | 2.94 | 2.0 | 5.3 | 6.3 | 550 | 1240 | 1900 | 6.0 | 5.8 | 5.5 |
| | | 20 + 35 | 2.18 | 3.82 | 2.0 | 6.0 | 6.3 | 550 | 1550 | 1900 | 7.1 | 6.8 | 6.5 |
| | | 25 + 25 | 3.00 | 3.00 | 2.0 | 6.0 | 6.3 | 550 | 1550 | 1900 | 7.1 | 6.8 | 6.5 |
| | | 25 + 35 | 2.50 | 3.50 | 2.0 | 6.0 | 6.3 | 550 | 1550 | 1900 | 7.1 | 6.8 | 6.5 |
| | | 35 + 35 | 3.00 | 3.00 | 2.0 | 6.0 | 6.3 | 550 | 1550 | 1900 | 7.1 | 6.8 | 6.5 |

| Indoor unit combination | | | Cooling capacity (kW) | | | | | Power consumption(W) | | | Standard current(A) | | |
|---|---|---|---|---|---|---|---|---|---|---|---|---|---|
| | | | Room cooling capacity | | Total capacity | | | | | | | | |
| | | | A | B | Min. | Standard | Max. | Min. | Standard | Max. | 220V | 230V | 240V |
| Cooling operation | 1 room | 20 | 2.0 | - | 1.5 | 2.0 | 2.7 | 560 | 620 | 880 | 3.1 | 3.0 | 2.8 |
| | | 25 | 2.5 | - | 1.5 | 2.5 | 3.2 | 560 | 710 | 1040 | 3.5 | 3.4 | 3.2 |
| | | 35 | 3.5 | - | 1.5 | 3.5 | 3.7 | 560 | 1030 | 1200 | 5.1 | 4.9 | 4.7 |
| | 2 room | 20 + 20 | 2.00 | 2.00 | 3.0 | 4.0 | 5.6 | 600 | 880 | 1750 | 4.4 | 4.2 | 4.0 |
| | | 20 + 25 | 2.00 | 2.50 | 3.0 | 4.5 | 5.8 | 600 | 1090 | 2030 | 5.3 | 5.0 | 4.8 |
| | | 20 + 35 | 2.00 | 3.50 | 3.0 | 5.5 | 6.2 | 600 | 1560 | 2160 | 7.3 | 7.0 | 6.7 |
| | | 25 + 25 | 2.50 | 2.50 | 3.0 | 5.0 | 6.1 | 600 | 1340 | 2110 | 6.4 | 6.1 | 5.8 |
| | | 25 + 35 | 2.42 | 3.38 | 3.0 | 5.8 | 6.3 | 600 | 1820 | 2200 | 8.4 | 8.0 | 7.7 |
| | | 35 + 35 | 2.90 | 2.90 | 3.0 | 5.8 | 6.3 | 600 | 1820 | 2200 | 8.4 | 8.0 | 7.7 |

## SCM50ZS-S1 Table of Indoor unit combination only with SRK-ZSX type

| Indoor unit combination | | | Heating capacity (kW) | | | | | | Power consumption(W) | | | Standard current(A) | | |
|---|---|---|---|---|---|---|---|---|---|---|---|---|---|---|
| | | | Room heating capacity | | | Total capacity | | | | | | | | |
| | | | A | B | C | Min. | Standard | Max. | Min. | Standard | Max. | 220V | 230V | 240V |
| Heating operation | 1 room | 20 | 3.0 | - | - | 1.4 | 3.0 | 3.7 | 480 | 820 | 1100 | 3.9 | 3.7 | 3.6 |
| | | 25 | 3.4 | - | - | 1.4 | 3.4 | 4.2 | 480 | 980 | 1240 | 4.6 | 4.4 | 4.2 |
| | | 35 | 4.5 | - | - | 1.4 | 4.5 | 5.0 | 480 | 1270 | 1490 | 6.0 | 5.7 | 5.5 |
| | | 50 | 5.8 | - | - | 1.4 | 5.8 | 6.2 | 480 | 1710 | 2260 | 7.9 | 7.6 | 7.3 |
| | 2 room | 20 + 20 | 2.95 | 2.95 | - | 2.0 | 5.9 | 7.3 | 540 | 1450 | 2580 | 6.7 | 6.4 | 6.2 |
| | | 20 + 25 | 2.67 | 3.33 | - | 2.0 | 6.0 | 7.3 | 540 | 1500 | 2580 | 7.0 | 6.7 | 6.4 |
| | | 20 + 35 | 2.29 | 4.01 | - | 2.0 | 6.3 | 7.3 | 540 | 1580 | 2580 | 7.3 | 7.0 | 6.7 |
| | | 20 + 50 | 1.89 | 4.71 | - | 2.0 | 6.6 | 7.3 | 540 | 1670 | 2580 | 7.7 | 7.4 | 7.1 |
| | | 25 + 25 | 3.05 | 3.05 | - | 2.0 | 6.1 | 7.3 | 540 | 1530 | 2580 | 7.1 | 6.8 | 6.5 |
| | | 25 + 35 | 2.67 | 3.73 | - | 2.0 | 6.4 | 7.3 | 540 | 1610 | 2580 | 7.5 | 7.1 | 6.8 |
| | | 25 + 50 | 2.20 | 4.40 | - | 2.0 | 6.6 | 7.3 | 540 | 1670 | 2580 | 7.7 | 7.4 | 7.1 |
| | | 35 + 35 | 3.30 | 3.30 | - | 2.0 | 6.6 | 7.3 | 540 | 1670 | 2580 | 7.7 | 7.4 | 7.1 |
| | | 35 + 50 | 2.72 | 3.88 | - | 2.0 | 6.6 | 7.3 | 540 | 1670 | 2580 | 7.7 | 7.4 | 7.1 |
| | 3 room | 20 + 20 + 20 | 2.00 | 2.00 | 2.00 | 3.0 | 6.0 | 7.5 | 600 | 1210 | 2580 | 5.6 | 5.4 | 5.1 |
| | | 20 + 20 + 25 | 1.91 | 1.91 | 2.38 | 3.0 | 6.2 | 7.5 | 600 | 1370 | 2580 | 6.4 | 6.1 | 5.8 |
| | | 20 + 20 + 35 | 1.76 | 1.76 | 3.08 | 3.0 | 6.6 | 7.5 | 600 | 1520 | 2580 | 7.1 | 6.7 | 6.5 |
| | | 20 + 25 + 25 | 1.83 | 2.29 | 2.29 | 3.0 | 6.4 | 7.5 | 600 | 1430 | 2580 | 6.6 | 6.3 | 6.1 |
| | | 20 + 25 + 35 | 1.70 | 2.13 | 2.98 | 3.0 | 6.8 | 7.5 | 600 | 1580 | 2580 | 7.3 | 7.0 | 6.7 |
| | | 25 + 25 + 25 | 2.20 | 2.20 | 2.20 | 3.0 | 6.6 | 7.5 | 600 | 1520 | 2580 | 7.1 | 6.7 | 6.5 |
| | | 25 + 25 + 35 | 2.06 | 2.06 | 2.88 | 3.0 | 7.0 | 7.5 | 600 | 1640 | 2580 | 7.6 | 7.3 | 7.0 |

| Indoor unit combination | | | Cooling capacity (kW) | | | | | | Power consumption(W) | | | Standard current(A) | | |
|---|---|---|---|---|---|---|---|---|---|---|---|---|---|---|
| | | | Room cooling capacity | | | Total capacity | | | | | | | | |
| | | | A | B | C | Min. | Standard | Max. | Min. | Standard | Max. | 220V | 230V | 240V |
| Cooling operation | 1 room | 20 | 2.0 | - | - | 1.8 | 2.0 | 2.8 | 500 | 550 | 900 | 2.6 | 2.5 | 2.4 |
| | | 25 | 2.5 | - | - | 1.8 | 2.5 | 3.4 | 500 | 720 | 1070 | 3.4 | 3.2 | 3.1 |
| | | 35 | 3.5 | - | - | 1.8 | 3.5 | 3.9 | 500 | 1080 | 1230 | 5.1 | 4.8 | 4.6 |
| | | 50 | 5.0 | - | - | 1.8 | 5.0 | 5.5 | 500 | 1700 | 2000 | 7.9 | 7.5 | 7.2 |
| | 2 room | 20 + 20 | 2.00 | 2.00 | - | 3.0 | 4.0 | 5.7 | 570 | 910 | 1800 | 4.2 | 4.1 | 3.9 |
| | | 20 + 25 | 1.91 | 2.39 | - | 3.0 | 4.3 | 5.9 | 570 | 1070 | 1980 | 5.0 | 4.8 | 4.6 |
| | | 20 + 35 | 1.82 | 3.18 | - | 3.0 | 5.0 | 6.2 | 570 | 1430 | 2070 | 6.6 | 6.3 | 6.1 |
| | | 20 + 50 | 1.71 | 4.29 | - | 3.0 | 6.0 | 6.5 | 570 | 1960 | 2150 | 9.0 | 8.6 | 8.2 |
| | | 25 + 25 | 2.35 | 2.35 | - | 3.0 | 4.7 | 6.2 | 570 | 1270 | 2070 | 5.9 | 5.6 | 5.4 |
| | | 25 + 35 | 2.21 | 3.09 | - | 3.0 | 5.3 | 6.5 | 570 | 1600 | 2150 | 7.4 | 7.1 | 6.8 |
| | | 25 + 50 | 2.00 | 4.00 | - | 3.0 | 6.0 | 6.5 | 570 | 1960 | 2150 | 9.0 | 8.6 | 8.2 |
| | | 35 + 35 | 3.00 | 3.00 | - | 3.0 | 6.0 | 6.5 | 570 | 1960 | 2150 | 9.0 | 8.6 | 8.2 |
| | | 35 + 50 | 2.47 | 3.53 | - | 3.0 | 6.0 | 6.5 | 570 | 1960 | 2150 | 9.0 | 8.6 | 8.2 |
| | 3 room | 20 + 20 + 20 | 1.67 | 1.67 | 1.67 | 3.4 | 5.0 | 7.1 | 690 | 1050 | 2150 | 4.9 | 4.7 | 4.5 |
| | | 20 + 20 + 25 | 1.60 | 1.60 | 2.00 | 3.4 | 5.2 | 7.1 | 690 | 1160 | 2150 | 5.4 | 5.1 | 4.9 |
| | | 20 + 20 + 35 | 1.49 | 1.49 | 2.61 | 3.4 | 5.6 | 7.1 | 690 | 1330 | 2150 | 6.2 | 5.9 | 5.7 |
| | | 20 + 25 + 25 | 1.54 | 1.93 | 1.93 | 3.4 | 5.4 | 7.1 | 690 | 1260 | 2150 | 5.8 | 5.6 | 5.4 |
| | | 20 + 25 + 35 | 1.45 | 1.81 | 2.54 | 3.4 | 5.8 | 7.1 | 690 | 1430 | 2150 | 6.6 | 6.3 | 6.1 |
| | | 25 + 25 + 25 | 1.87 | 1.87 | 1.87 | 3.4 | 5.6 | 7.1 | 690 | 1330 | 2150 | 6.2 | 5.9 | 5.7 |
| | | 25 + 25 + 35 | 1.76 | 1.76 | 2.47 | 3.4 | 6.0 | 7.1 | 690 | 1490 | 2150 | 6.9 | 6.6 | 6.3 |

## SCM50ZS-S1 Table of Indoor unit combination only with SKM-ZSP type

| Indoor unit combination | | | Heating capacity (kW) | | | | | | Power consumption(W) | | | Standard current(A) | | |
|---|---|---|---|---|---|---|---|---|---|---|---|---|---|---|
| | | | Room heating capacity | | | Total capacity | | | | | | | | |
| | | | A | B | C | Min. | Standard | Max. | Min. | Standard | Max. | 220V | 230V | 240V |
| Heating operation | 1 room | 20 | 3.0 | - | - | 1.4 | 3.0 | 3.5 | 480 | 1040 | 1100 | 4.9 | 4.7 | 4.5 |
| | | 25 | 3.4 | - | - | 1.4 | 3.4 | 4.0 | 480 | 1200 | 1240 | 5.7 | 5.4 | 5.2 |
| | | 35 | 4.5 | - | - | 1.4 | 4.5 | 4.8 | 480 | 1490 | 1490 | 7.0 | 6.7 | 6.4 |
| | 2 room | 20 + 20 | 2.95 | 2.95 | - | 2.0 | 5.9 | 7.0 | 540 | 1530 | 2580 | 7.1 | 6.8 | 6.5 |
| | | 20 + 25 | 2.67 | 3.33 | - | 2.0 | 6.0 | 7.0 | 540 | 1580 | 2580 | 7.3 | 7.0 | 6.7 |
| | | 20 + 35 | 2.29 | 4.01 | - | 2.0 | 6.3 | 7.0 | 540 | 1670 | 2580 | 7.7 | 7.4 | 7.1 |
| | | 25 + 25 | 3.05 | 3.05 | - | 2.0 | 6.1 | 7.0 | 540 | 1610 | 2580 | 7.5 | 7.1 | 6.8 |
| | | 25 + 35 | 2.67 | 3.73 | - | 2.0 | 6.4 | 7.0 | 540 | 1700 | 2580 | 7.9 | 7.5 | 7.2 |
| | | 35 + 35 | 3.30 | 3.30 | - | 2.0 | 6.6 | 7.0 | 540 | 1760 | 2580 | 8.1 | 7.8 | 7.4 |
| | 3 room | 20 + 20 + 20 | 2.00 | 2.00 | 2.00 | 3.0 | 6.0 | 7.3 | 600 | 1360 | 2580 | 6.3 | 6.0 | 5.8 |
| | | 20 + 20 + 25 | 1.91 | 1.91 | 2.38 | 3.0 | 6.2 | 7.3 | 600 | 1450 | 2580 | 6.7 | 6.4 | 6.2 |
| | | 20 + 20 + 35 | 1.76 | 1.76 | 3.08 | 3.0 | 6.6 | 7.3 | 600 | 1620 | 2580 | 7.5 | 7.2 | 6.9 |
| | | 20 + 25 + 25 | 1.83 | 2.29 | 2.29 | 3.0 | 6.4 | 7.3 | 600 | 1530 | 2580 | 7.1 | 6.8 | 6.5 |
| | | 20 + 25 + 35 | 1.70 | 2.13 | 2.98 | 3.0 | 6.8 | 7.3 | 600 | 1680 | 2580 | 7.8 | 7.5 | 7.1 |
| | | 25 + 25 + 25 | 2.20 | 2.20 | 2.20 | 3.0 | 6.6 | 7.3 | 600 | 1620 | 2580 | 7.5 | 7.2 | 6.9 |
| | | 25 + 25 + 35 | 2.06 | 2.06 | 2.88 | 3.0 | 7.0 | 7.3 | 600 | 1750 | 2580 | 8.1 | 7.7 | 7.4 |

| Indoor unit combination | | | Cooling capacity (kW) | | | | | | Power consumption(W) | | | Standard current(A) | | |
|---|---|---|---|---|---|---|---|---|---|---|---|---|---|---|
| | | | Room cooling capacity | | | Total capacity | | | | | | | | |
| | | | A | B | C | Min. | Standard | Max. | Min. | Standard | Max. | 220V | 230V | 240V |
| Cooling operation | 1 room | 20 | 2.0 | - | - | 1.8 | 2.0 | 2.7 | 500 | 610 | 900 | 2.9 | 2.8 | 2.6 |
| | | 25 | 2.5 | - | - | 1.8 | 2.5 | 3.2 | 500 | 800 | 1070 | 3.8 | 3.6 | 3.5 |
| | | 35 | 3.5 | - | - | 1.8 | 3.5 | 3.7 | 500 | 1170 | 1230 | 5.5 | 5.2 | 5.0 |
| | 2 room | 20 + 20 | 2.00 | 2.00 | - | 3.0 | 4.0 | 5.6 | 570 | 1000 | 1800 | 4.7 | 4.5 | 4.3 |
| | | 20 + 25 | 1.91 | 2.39 | - | 3.0 | 4.3 | 5.8 | 570 | 1150 | 1980 | 5.4 | 5.1 | 4.9 |
| | | 20 + 35 | 1.82 | 3.18 | - | 3.0 | 5.0 | 6.1 | 570 | 1530 | 2070 | 7.1 | 6.8 | 6.5 |
| | | 25 + 25 | 2.35 | 2.35 | - | 3.0 | 4.7 | 6.1 | 570 | 1520 | 2070 | 7.1 | 6.8 | 6.5 |
| | | 25 + 35 | 2.21 | 3.09 | - | 3.0 | 5.3 | 6.3 | 570 | 1720 | 2150 | 8.0 | 7.6 | 7.3 |
| | | 35 + 35 | 3.00 | 3.00 | - | 3.0 | 6.0 | 6.3 | 570 | 2050 | 2150 | 9.4 | 9.0 | 8.6 |
| | 3 room | 20 + 20 + 20 | 1.67 | 1.67 | 1.67 | 3.4 | 5.0 | 6.9 | 690 | 1160 | 2150 | 5.4 | 5.1 | 4.9 |
| | | 20 + 20 + 25 | 1.60 | 1.60 | 2.00 | 3.4 | 5.2 | 6.9 | 690 | 1250 | 2150 | 5.8 | 5.5 | 5.3 |
| | | 20 + 20 + 35 | 1.49 | 1.49 | 2.61 | 3.4 | 5.6 | 6.9 | 690 | 1400 | 2150 | 6.5 | 6.2 | 6.0 |
| | | 20 + 25 + 25 | 1.54 | 1.93 | 1.93 | 3.4 | 5.4 | 6.9 | 690 | 1350 | 2150 | 6.3 | 6.0 | 5.7 |
| | | 20 + 25 + 35 | 1.45 | 1.81 | 2.54 | 3.4 | 5.8 | 6.9 | 690 | 1500 | 2150 | 7.0 | 6.7 | 6.4 |
| | | 25 + 25 + 25 | 1.87 | 1.87 | 1.87 | 3.4 | 5.6 | 6.9 | 690 | 1400 | 2150 | 6.5 | 6.2 | 6.0 |
| | | 25 + 25 + 35 | 1.76 | 1.76 | 2.47 | 3.4 | 6.0 | 6.9 | 690 | 1600 | 2150 | 7.4 | 7.1 | 6.8 |

## SCM50ZS-S1 Table of Indoor unit combination with other indoor unit

| Indoor unit combination | | | Heating capacity (kW) | | | | | | Power consumption(W) | | | Standard current(A) | | |
|---|---|---|---|---|---|---|---|---|---|---|---|---|---|---|
| | | | Room heating capacity | | | Total capacity | | | | | | | | |
| | | | A | B | C | Min. | Standard | Max. | Min. | Standard | Max. | 220V | 230V | 240V |
| Heating operation | 1 room | 20 | 3.0 | - | - | 1.4 | 3.0 | 3.5 | 480 | 1020 | 1100 | 4.8 | 4.6 | 4.4 |
| | | 25 | 3.4 | - | - | 1.4 | 3.4 | 4.0 | 480 | 1180 | 1240 | 5.6 | 5.3 | 5.1 |
| | | 35 | 4.5 | - | - | 1.4 | 4.5 | 4.8 | 480 | 1470 | 1490 | 6.9 | 6.6 | 6.3 |
| | | 50 | 5.8 | - | - | 1.4 | 5.8 | 6.0 | 480 | 1910 | 2260 | 8.8 | 8.4 | 8.0 |
| | 2 room | 20 + 20 | 2.95 | 2.95 | - | 2.0 | 5.9 | 7.0 | 540 | 1510 | 2580 | 7.0 | 6.7 | 6.4 |
| | | 20 + 25 | 2.67 | 3.33 | - | 2.0 | 6.0 | 7.0 | 540 | 1560 | 2580 | 7.2 | 6.9 | 6.6 |
| | | 20 + 35 | 2.29 | 4.01 | - | 2.0 | 6.3 | 7.0 | 540 | 1650 | 2580 | 7.7 | 7.3 | 7.0 |
| | | 20 + 50 | 1.89 | 4.71 | - | 2.0 | 6.6 | 7.0 | 540 | 1740 | 2580 | 8.0 | 7.7 | 7.4 |
| | | 25 + 25 | 3.05 | 3.05 | - | 2.0 | 6.1 | 7.0 | 540 | 1590 | 2580 | 7.4 | 7.1 | 6.8 |
| | | 25 + 35 | 2.67 | 3.73 | - | 2.0 | 6.4 | 7.0 | 540 | 1680 | 2580 | 7.8 | 7.5 | 7.1 |
| | | 25 + 50 | 2.20 | 4.40 | - | 2.0 | 6.6 | 7.0 | 540 | 1740 | 2580 | 8.0 | 7.7 | 7.4 |
| | | 35 + 35 | 3.30 | 3.30 | - | 2.0 | 6.6 | 7.0 | 540 | 1740 | 2580 | 8.0 | 7.7 | 7.4 |
| | | 35 + 50 | 2.72 | 3.88 | - | 2.0 | 6.6 | 7.0 | 540 | 1740 | 2580 | 8.0 | 7.7 | 7.4 |
| | 3 room | 20 + 20 + 20 | 2.00 | 2.00 | 2.00 | 3.0 | 6.0 | 7.3 | 600 | 1340 | 2580 | 6.2 | 5.9 | 5.7 |
| | | 20 + 20 + 25 | 1.91 | 1.91 | 2.38 | 3.0 | 6.2 | 7.3 | 600 | 1430 | 2580 | 6.6 | 6.3 | 6.1 |
| | | 20 + 20 + 35 | 1.76 | 1.76 | 3.08 | 3.0 | 6.6 | 7.3 | 600 | 1600 | 2580 | 7.4 | 7.1 | 6.8 |
| | | 20 + 25 + 25 | 1.83 | 2.29 | 2.29 | 3.0 | 6.4 | 7.3 | 600 | 1510 | 2580 | 7.0 | 6.7 | 6.4 |
| | | 20 + 25 + 35 | 1.70 | 2.13 | 2.98 | 3.0 | 6.8 | 7.3 | 600 | 1660 | 2580 | 7.7 | 7.4 | 7.1 |
| | | 25 + 25 + 25 | 2.20 | 2.20 | 2.20 | 3.0 | 6.6 | 7.3 | 600 | 1600 | 2580 | 7.4 | 7.1 | 6.8 |
| | | 25 + 25 + 35 | 2.06 | 2.06 | 2.88 | 3.0 | 7.0 | 7.3 | 600 | 1730 | 2580 | 8.0 | 7.7 | 7.3 |

| Indoor unit combination | | | Cooling capacity (kW) | | | | | | Power consumption(W) | | | Standard current(A) | | |
|---|---|---|---|---|---|---|---|---|---|---|---|---|---|---|
| | | | Room cooling capacity | | | Total capacity | | | | | | | | |
| | | | A | B | C | Min. | Standard | Max. | Min. | Standard | Max. | 220V | 230V | 240V |
| Cooling operation | 1 room | 20 | 2.0 | - | - | 1.8 | 2.0 | 2.7 | 500 | 580 | 900 | 2.7 | 2.6 | 2.5 |
| | | 25 | 2.5 | - | - | 1.8 | 2.5 | 3.2 | 500 | 760 | 1070 | 3.6 | 3.4 | 3.3 |
| | | 35 | 3.5 | - | - | 1.8 | 3.5 | 3.7 | 500 | 1140 | 1230 | 5.3 | 5.1 | 4.9 |
| | | 50 | 5.0 | - | - | 1.8 | 5.0 | 5.3 | 500 | 1790 | 2000 | 8.3 | 7.9 | 7.6 |
| | 2 room | 20 + 20 | 2.00 | 2.00 | - | 3.0 | 4.0 | 5.6 | 570 | 950 | 1800 | 4.4 | 4.2 | 4.1 |
| | | 20 + 25 | 1.91 | 2.39 | - | 3.0 | 4.3 | 5.8 | 570 | 1110 | 1980 | 5.2 | 4.9 | 4.7 |
| | | 20 + 35 | 1.82 | 3.18 | - | 3.0 | 5.0 | 6.1 | 570 | 1490 | 2070 | 6.9 | 6.6 | 6.3 |
| | | 20 + 50 | 1.71 | 4.29 | - | 3.0 | 6.0 | 6.3 | 570 | 2040 | 2150 | 9.4 | 9.0 | 8.6 |
| | | 25 + 25 | 2.35 | 2.35 | - | 3.0 | 4.7 | 6.1 | 570 | 1320 | 2070 | 6.1 | 5.9 | 5.6 |
| | | 25 + 35 | 2.21 | 3.09 | - | 3.0 | 5.3 | 6.3 | 570 | 1660 | 2150 | 7.7 | 7.4 | 7.1 |
| | | 25 + 50 | 2.00 | 4.00 | - | 3.0 | 6.0 | 6.3 | 570 | 2040 | 2150 | 9.4 | 9.0 | 8.6 |
| | | 35 + 35 | 3.00 | 3.00 | - | 3.0 | 6.0 | 6.3 | 570 | 2040 | 2150 | 9.4 | 9.0 | 8.6 |
| | | 35 + 50 | 2.47 | 3.53 | - | 3.0 | 6.0 | 6.3 | 570 | 2040 | 2150 | 9.4 | 9.0 | 8.6 |
| | 3 room | 20 + 20 + 20 | 1.67 | 1.67 | 1.67 | 3.4 | 5.0 | 6.9 | 690 | 1120 | 2150 | 5.2 | 5.0 | 4.8 |
| | | 20 + 20 + 25 | 1.60 | 1.60 | 2.00 | 3.4 | 5.2 | 6.9 | 690 | 1200 | 2150 | 5.6 | 5.3 | 5.1 |
| | | 20 + 20 + 35 | 1.49 | 1.49 | 2.61 | 3.4 | 5.6 | 6.9 | 690 | 1370 | 2150 | 6.4 | 6.1 | 5.8 |
| | | 20 + 25 + 25 | 1.54 | 1.93 | 1.93 | 3.4 | 5.4 | 6.9 | 690 | 1300 | 2150 | 6.0 | 5.8 | 5.5 |
| | | 20 + 25 + 35 | 1.45 | 1.81 | 2.54 | 3.4 | 5.8 | 6.9 | 690 | 1470 | 2150 | 6.8 | 6.5 | 6.3 |
| | | 25 + 25 + 25 | 1.87 | 1.87 | 1.87 | 3.4 | 5.6 | 6.9 | 690 | 1370 | 2150 | 6.4 | 6.1 | 5.8 |
| | | 25 + 25 + 35 | 1.76 | 1.76 | 2.47 | 3.4 | 6.0 | 6.9 | 690 | 1540 | 2150 | 7.1 | 6.8 | 6.5 |

## SCM60ZM-S1 Table of Indoor unit combination only with SRK-ZSX type

| Indoor unit combination | | | Heating capacity (kW) | | | | | | Power consumption(W) | | | Standard current(A) | | |
|---|---|---|---|---|---|---|---|---|---|---|---|---|---|---|
| | | | Room heating capacity | | | Total capacity | | | | | | | | |
| | | | A | B | C | Min. | Standard | Max. | Min. | Standard | Max. | 220V | 230V | 240V |
| Heating operation | 1 room | 20 | 3.0 | - | - | 1.5 | 3.0 | 3.7 | 600 | 780 | 1330 | 3.6 | 3.4 | 3.3 |
| | | 25 | 3.4 | - | - | 1.5 | 3.4 | 4.2 | 600 | 950 | 1510 | 4.4 | 4.2 | 4.0 |
| | | 35 | 4.5 | - | - | 1.5 | 4.5 | 5.0 | 600 | 1270 | 1790 | 5.8 | 5.6 | 5.3 |
| | | 50 | 5.8 | - | - | 1.5 | 5.8 | 6.4 | 600 | 1730 | 2310 | 7.9 | 7.6 | 7.3 |
| | | 60 | 6.8 | - | - | 1.5 | 6.8 | 7.3 | 600 | 2040 | 2660 | 9.4 | 9.0 | 8.6 |
| | 2 room | 20+20 | 3.00 | 3.00 | - | 2.1 | 6.0 | 7.3 | 630 | 1450 | 2100 | 6.7 | 6.4 | 6.1 |
| | | 20+25 | 2.71 | 3.39 | - | 2.1 | 6.1 | 7.5 | 630 | 1520 | 2550 | 7.0 | 6.7 | 6.4 |
| | | 20+35 | 2.36 | 4.14 | - | 2.1 | 6.5 | 7.6 | 630 | 1620 | 3000 | 7.4 | 7.1 | 6.8 |
| | | 20+50 | 2.00 | 5.00 | - | 2.1 | 7.0 | 7.6 | 630 | 1830 | 3000 | 8.4 | 8.0 | 7.7 |
| | | 20+60 | 1.78 | 5.33 | - | 2.1 | 7.1 | 7.6 | 630 | 1860 | 3000 | 8.5 | 8.2 | 7.8 |
| | | 25+25 | 3.15 | 3.15 | - | 2.1 | 6.3 | 7.6 | 630 | 1580 | 3000 | 7.3 | 6.9 | 6.6 |
| | | 25+35 | 2.79 | 3.91 | - | 2.1 | 6.7 | 7.6 | 630 | 1700 | 3000 | 7.8 | 7.5 | 7.2 |
| | | 25+50 | 2.37 | 4.73 | - | 2.1 | 7.1 | 7.6 | 630 | 1860 | 3000 | 8.5 | 8.2 | 7.8 |
| | | 25+60 | 2.09 | 5.01 | - | 2.1 | 7.1 | 7.6 | 630 | 1860 | 3000 | 8.5 | 8.2 | 7.8 |
| | | 35+35 | 3.50 | 3.50 | - | 2.1 | 7.0 | 7.6 | 630 | 1830 | 3000 | 8.4 | 8.0 | 7.7 |
| | | 35+50 | 2.92 | 4.18 | - | 2.1 | 7.1 | 7.6 | 630 | 1860 | 3000 | 8.5 | 8.2 | 7.8 |
| | | 35+60 | 2.62 | 4.48 | - | 2.1 | 7.1 | 7.6 | 630 | 1860 | 3000 | 8.5 | 8.2 | 7.8 |
| | | 50+50 | 3.55 | 3.55 | - | 2.1 | 7.1 | 7.6 | 630 | 1860 | 3000 | 8.5 | 8.2 | 7.8 |
| | | 50+60 | 3.23 | 3.87 | - | 2.1 | 7.1 | 7.6 | 630 | 1860 | 3000 | 8.5 | 8.2 | 7.8 |
| | 3 room | 20+20+20 | 2.27 | 2.27 | 2.27 | 3.2 | 6.8 | 7.8 | 660 | 1450 | 3000 | 6.7 | 6.4 | 6.1 |
| | | 20+20+25 | 2.09 | 2.09 | 2.62 | 3.2 | 6.8 | 7.8 | 660 | 1450 | 3000 | 6.7 | 6.4 | 6.1 |
| | | 20+20+35 | 1.81 | 1.81 | 3.17 | 3.2 | 6.8 | 7.8 | 660 | 1450 | 3000 | 7.1 | 6.8 | 6.6 |
| | | 20+20+50 | 1.56 | 1.56 | 3.89 | 3.2 | 7.0 | 7.8 | 660 | 1620 | 3000 | 7.4 | 7.1 | 6.8 |
| | | 20+20+60 | 1.44 | 1.44 | 4.32 | 3.2 | 7.2 | 7.8 | 660 | 1780 | 3000 | 8.2 | 7.8 | 7.5 |
| | | 20+25+25 | 1.94 | 2.43 | 2.43 | 3.2 | 6.8 | 7.8 | 660 | 1450 | 3000 | 7.1 | 6.8 | 6.6 |
| | | 20+25+35 | 1.73 | 2.16 | 3.02 | 3.2 | 6.9 | 7.8 | 660 | 1500 | 3000 | 6.9 | 6.6 | 6.3 |
| | | 20+25+50 | 1.49 | 1.87 | 3.74 | 3.2 | 7.1 | 7.8 | 660 | 1670 | 3000 | 7.7 | 7.3 | 7.0 |
| | | 20+25+60 | 1.37 | 1.71 | 4.11 | 3.2 | 7.2 | 7.8 | 660 | 1780 | 3000 | 8.2 | 7.8 | 7.5 |
| | | 20+35+35 | 1.56 | 2.72 | 2.72 | 3.2 | 7.0 | 7.8 | 660 | 1620 | 3000 | 7.4 | 7.1 | 6.8 |
| | | 20+35+50 | 1.37 | 2.40 | 3.43 | 3.2 | 7.2 | 7.8 | 660 | 1780 | 3000 | 8.2 | 7.8 | 7.5 |
| | | 25+25+25 | 2.27 | 2.27 | 2.27 | 3.2 | 6.8 | 7.8 | 660 | 1450 | 3000 | 7.1 | 6.8 | 6.6 |
| | | 25+25+35 | 2.06 | 2.06 | 2.88 | 3.2 | 7.0 | 7.8 | 660 | 1620 | 3000 | 7.4 | 7.1 | 6.8 |
| | | 25+25+50 | 1.80 | 1.80 | 3.60 | 3.2 | 7.2 | 7.8 | 660 | 1780 | 3000 | 8.2 | 7.8 | 7.5 |
| | | 25+25+60 | 1.64 | 1.64 | 3.93 | 3.2 | 7.2 | 7.8 | 660 | 1780 | 3000 | 8.2 | 7.8 | 7.5 |
| | | 25+35+35 | 1.87 | 2.62 | 2.62 | 3.2 | 7.1 | 7.8 | 660 | 1670 | 3000 | 7.7 | 7.3 | 7.0 |
| | | 25+35+50 | 1.64 | 2.29 | 3.27 | 3.2 | 7.2 | 7.8 | 660 | 1780 | 3000 | 8.2 | 7.8 | 7.5 |
| | | 35+35+35 | 2.40 | 2.40 | 2.40 | 3.2 | 7.2 | 7.8 | 660 | 1780 | 3000 | 8.2 | 7.8 | 7.5 |

| Indoor unit combination | | | Cooling capacity (kW) | | | | | | Power consumption(W) | | | Standard current(A) | | |
|---|---|---|---|---|---|---|---|---|---|---|---|---|---|---|
| | | | Room cooling capacity | | | Total capacity | | | | | | | | |
| | | | A | B | C | Min. | Standard | Max. | Min. | Standard | Max. | 220V | 230V | 240V |
| Cooling operation | 1 room | 20 | 2.0 | - | - | 1.8 | 2.0 | 2.8 | 500 | 540 | 950 | 2.5 | 2.4 | 2.3 |
| | | 25 | 2.5 | - | - | 1.8 | 2.5 | 3.4 | 500 | 720 | 1080 | 3.3 | 3.2 | 3.0 |
| | | 35 | 3.5 | - | - | 1.8 | 3.5 | 3.9 | 500 | 1090 | 1240 | 5.0 | 4.8 | 4.6 |
| | | 50 | 5.0 | - | - | 1.8 | 5.0 | 5.8 | 500 | 1780 | 2100 | 8.2 | 7.8 | 7.5 |
| | | 60 | 6.0 | - | - | 1.8 | 6.0 | 6.3 | 500 | 2260 | 2370 | 10.4 | 9.9 | 9.5 |
| | 2 room | 20+20 | 2.00 | 2.00 | - | 3.0 | 4.0 | 5.7 | 570 | 750 | 1750 | 3.4 | 3.3 | 3.2 |
| | | 20+25 | 2.00 | 2.50 | - | 3.0 | 4.5 | 5.9 | 570 | 990 | 1910 | 4.5 | 4.3 | 4.2 |
| | | 20+35 | 1.93 | 3.37 | - | 3.0 | 5.3 | 6.2 | 570 | 1550 | 2110 | 7.1 | 6.8 | 6.5 |
| | | 20+50 | 1.89 | 4.71 | - | 3.0 | 6.6 | 6.9 | 570 | 2280 | 2390 | 10.5 | 10.0 | 9.6 |
| | | 20+60 | 1.68 | 5.03 | - | 3.0 | 6.7 | 6.9 | 570 | 2320 | 2390 | 10.7 | 10.2 | 9.8 |
| | | 25+25 | 2.45 | 2.45 | - | 3.0 | 4.9 | 6.2 | 570 | 1270 | 2110 | 5.8 | 5.6 | 5.3 |
| | | 25+35 | 2.42 | 3.38 | - | 3.0 | 5.8 | 6.5 | 570 | 1840 | 2270 | 8.4 | 8.1 | 7.7 |
| | | 25+50 | 2.23 | 4.47 | - | 3.0 | 6.7 | 6.9 | 570 | 2320 | 2390 | 10.7 | 10.2 | 9.8 |
| | | 25+60 | 1.97 | 4.73 | - | 3.0 | 6.7 | 6.9 | 570 | 2320 | 2390 | 10.7 | 10.2 | 9.8 |
| | | 35+35 | 3.30 | 3.30 | - | 3.0 | 6.6 | 6.9 | 570 | 2280 | 2390 | 10.5 | 10.0 | 9.6 |
| | | 35+50 | 2.76 | 3.94 | - | 3.0 | 6.7 | 6.9 | 570 | 2320 | 2390 | 10.7 | 10.2 | 9.8 |
| | | 35+60 | 2.47 | 4.23 | - | 3.0 | 6.7 | 6.9 | 570 | 2320 | 2390 | 10.7 | 10.2 | 9.8 |
| | | 50+50 | 3.35 | 3.35 | - | 3.0 | 6.7 | 6.9 | 570 | 2320 | 2390 | 10.7 | 10.2 | 9.8 |
| | | 50+60 | 3.05 | 3.65 | - | 3.0 | 6.7 | 6.9 | 570 | 2320 | 2390 | 10.7 | 10.2 | 9.8 |
| | 3 room | 20+20+20 | 2.00 | 2.00 | 2.00 | 3.6 | 6.0 | 7.5 | 690 | 1430 | 2390 | 6.6 | 6.3 | 6.0 |
| | | 20+20+25 | 1.85 | 1.85 | 2.80 | 3.6 | 6.0 | 7.5 | 690 | 1430 | 2390 | 6.6 | 6.3 | 6.0 |
| | | 20+20+35 | 1.60 | 1.60 | 2.80 | 3.6 | 6.0 | 7.5 | 690 | 1430 | 2390 | 6.8 | 6.5 | 6.2 |
| | | 20+20+50 | 1.40 | 1.40 | 3.50 | 3.6 | 6.3 | 7.5 | 690 | 1480 | 2390 | 6.8 | 6.5 | 6.2 |
| | | 20+20+60 | 1.28 | 1.28 | 3.84 | 3.6 | 6.4 | 7.5 | 690 | 1500 | 2390 | 6.9 | 6.6 | 6.3 |
| | | 20+25+25 | 1.69 | 2.11 | 2.11 | 3.6 | 5.9 | 7.5 | 690 | 1410 | 2390 | 6.5 | 6.2 | 5.9 |
| | | 20+25+35 | 1.53 | 1.91 | 2.67 | 3.6 | 6.1 | 7.5 | 690 | 1460 | 2390 | 6.7 | 6.4 | 6.1 |
| | | 20+25+50 | 1.35 | 1.68 | 3.37 | 3.6 | 6.4 | 7.5 | 690 | 1500 | 2390 | 6.9 | 6.6 | 6.3 |
| | | 20+25+60 | 1.26 | 1.57 | 3.77 | 3.6 | 6.6 | 7.5 | 690 | 1520 | 2390 | 7.0 | 6.7 | 6.4 |
| | | 20+35+35 | 1.40 | 2.45 | 2.45 | 3.6 | 6.3 | 7.5 | 690 | 1480 | 2390 | 6.8 | 6.5 | 6.2 |
| | | 20+35+50 | 1.26 | 2.20 | 3.14 | 3.6 | 6.6 | 7.5 | 690 | 1520 | 2390 | 7.0 | 6.7 | 6.4 |
| | | 25+25+25 | 2.00 | 2.00 | 2.00 | 3.6 | 6.0 | 7.5 | 690 | 1430 | 2390 | 6.8 | 6.5 | 6.2 |
| | | 25+25+35 | 1.79 | 1.79 | 2.51 | 3.6 | 6.1 | 7.5 | 690 | 1460 | 2390 | 6.7 | 6.4 | 6.1 |
| | | 25+25+50 | 1.60 | 1.60 | 3.20 | 3.6 | 6.4 | 7.5 | 690 | 1500 | 2390 | 6.9 | 6.6 | 6.3 |
| | | 25+25+60 | 1.52 | 1.52 | 3.65 | 3.6 | 6.7 | 7.5 | 690 | 1540 | 2390 | 7.1 | 6.8 | 6.5 |
| | | 25+35+35 | 1.68 | 2.36 | 2.36 | 3.6 | 6.4 | 7.5 | 690 | 1500 | 2390 | 6.9 | 6.6 | 6.3 |
| | | 25+35+50 | 1.52 | 2.13 | 3.05 | 3.6 | 6.7 | 7.5 | 690 | 1540 | 2390 | 7.1 | 6.8 | 6.5 |
| | | 35+35+35 | 2.20 | 2.20 | 2.20 | 3.6 | 6.6 | 7.5 | 690 | 1520 | 2390 | 7.0 | 6.7 | 6.4 |

R410A

# MULTI-SPLIT SYSTEM

## SCM60ZM-S1 Table of Indoor unit combination with other indoor unit

| Indoor unit combination | | | Heating capacity (kW) | | | | | | Power consumption(W) | | | Standard current(A) | | |
|---|---|---|---|---|---|---|---|---|---|---|---|---|---|---|
| | | | Room heating capacity | | | Total capacity | | | | | | | | |
| | | | A | B | C | Min. | Standard | Max. | Min. | Standard | Max. | 220V | 230V | 240V |
| Heating operation | 1 room | 20 | 3.0 | - | - | 1.5 | 3.0 | 3.5 | 600 | 970 | 1330 | 4.5 | 4.3 | 4.1 |
| | | 25 | 3.4 | - | - | 1.5 | 3.4 | 4.0 | 600 | 1140 | 1510 | 5.2 | 5.0 | 4.8 |
| | | 35 | 4.5 | - | - | 1.5 | 4.5 | 4.8 | 600 | 1480 | 1790 | 6.8 | 6.5 | 6.2 |
| | | 50 | 5.8 | - | - | 1.5 | 5.8 | 6.1 | 600 | 1960 | 2310 | 9.0 | 8.6 | 8.2 |
| | | 60 | 6.8 | - | - | 1.5 | 6.8 | 7.0 | 600 | 2250 | 2660 | 10.3 | 9.9 | 9.5 |
| | 2 room | 20+20 | 3.00 | 3.00 | - | 2.1 | 6.0 | 7.0 | 630 | 1520 | 2100 | 7.0 | 6.7 | 6.4 |
| | | 20+25 | 2.71 | 3.39 | - | 2.1 | 6.1 | 7.2 | 630 | 1600 | 2550 | 7.3 | 7.0 | 6.7 |
| | | 20+35 | 2.36 | 4.14 | - | 2.1 | 6.5 | 7.3 | 630 | 1710 | 3000 | 7.9 | 7.5 | 7.2 |
| | | 20+50 | 2.00 | 5.00 | - | 2.1 | 7.0 | 7.3 | 630 | 1940 | 3000 | 8.9 | 8.5 | 8.2 |
| | | 20+60 | 1.78 | 5.33 | - | 2.1 | 7.1 | 7.3 | 630 | 1980 | 3000 | 9.1 | 8.7 | 8.3 |
| | | 25+25 | 3.15 | 3.15 | - | 2.1 | 6.3 | 7.3 | 630 | 1660 | 3000 | 7.6 | 7.3 | 7.0 |
| | | 25+35 | 2.79 | 3.91 | - | 2.1 | 6.7 | 7.3 | 630 | 1790 | 3000 | 8.2 | 7.9 | 7.5 |
| | | 25+50 | 2.37 | 4.73 | - | 2.1 | 7.1 | 7.3 | 630 | 1980 | 3000 | 9.1 | 8.7 | 8.3 |
| | | 25+60 | 2.09 | 5.01 | - | 2.1 | 7.1 | 7.3 | 630 | 1980 | 3000 | 9.1 | 8.7 | 8.3 |
| | | 35+35 | 3.50 | 3.50 | - | 2.1 | 7.0 | 7.3 | 630 | 1940 | 3000 | 8.9 | 8.5 | 8.2 |
| | | 35+50 | 2.92 | 4.18 | - | 2.1 | 7.1 | 7.3 | 630 | 1980 | 3000 | 9.1 | 8.7 | 8.3 |
| | | 35+60 | 2.62 | 4.48 | - | 2.1 | 7.1 | 7.3 | 630 | 1980 | 3000 | 9.1 | 8.7 | 8.3 |
| | | 50+50 | 3.55 | 3.55 | - | 2.1 | 7.1 | 7.3 | 630 | 1980 | 3000 | 9.1 | 8.7 | 8.3 |
| | | 50+60 | 3.23 | 3.87 | - | 2.1 | 7.1 | 7.3 | 630 | 1980 | 3000 | 9.1 | 8.7 | 8.3 |
| | 3 room | 20+20+20 | 2.27 | 2.27 | 2.27 | 3.2 | 6.8 | 7.6 | 660 | 1540 | 3000 | 7.1 | 6.8 | 6.5 |
| | | 20+20+25 | 2.09 | 2.09 | 2.62 | 3.2 | 6.8 | 7.6 | 660 | 1540 | 3000 | 7.1 | 6.8 | 6.5 |
| | | 20+20+35 | 1.81 | 1.81 | 3.17 | 3.2 | 6.8 | 7.6 | 660 | 1540 | 3000 | 7.1 | 6.8 | 6.5 |
| | | 20+20+50 | 1.56 | 1.56 | 3.89 | 3.2 | 7.0 | 7.6 | 660 | 1730 | 3000 | 7.9 | 7.6 | 7.3 |
| | | 20+20+60 | 1.44 | 1.44 | 4.32 | 3.2 | 7.2 | 7.6 | 660 | 1900 | 3000 | 8.7 | 8.3 | 8.0 |
| | | 20+25+25 | 1.94 | 2.43 | 2.43 | 3.2 | 6.8 | 7.6 | 660 | 1540 | 3000 | 7.1 | 6.8 | 6.5 |
| | | 20+25+35 | 1.73 | 2.16 | 3.02 | 3.2 | 6.9 | 7.6 | 660 | 1590 | 3000 | 7.3 | 7.0 | 6.7 |
| | | 20+25+50 | 1.49 | 1.87 | 3.74 | 3.2 | 7.1 | 7.6 | 660 | 1780 | 3000 | 8.2 | 7.8 | 7.5 |
| | | 20+25+60 | 1.37 | 1.71 | 4.11 | 3.2 | 7.2 | 7.6 | 660 | 1900 | 3000 | 8.7 | 8.3 | 8.0 |
| | | 20+35+35 | 1.56 | 2.72 | 2.72 | 3.2 | 7.0 | 7.6 | 660 | 1730 | 3000 | 7.9 | 7.6 | 7.3 |
| | | 20+35+50 | 1.37 | 2.40 | 3.43 | 3.2 | 7.2 | 7.6 | 660 | 1900 | 3000 | 8.7 | 8.3 | 8.0 |
| | | 25+25+25 | 2.27 | 2.27 | 2.27 | 3.2 | 6.8 | 7.6 | 660 | 1540 | 3000 | 7.1 | 6.8 | 6.5 |
| | | 25+25+35 | 2.06 | 2.06 | 2.88 | 3.2 | 7.0 | 7.6 | 660 | 1730 | 3000 | 7.9 | 7.6 | 7.3 |
| | | 25+25+50 | 1.80 | 1.80 | 3.60 | 3.2 | 7.2 | 7.6 | 660 | 1900 | 3000 | 8.7 | 8.3 | 8.0 |
| | | 25+25+60 | 1.64 | 1.64 | 3.93 | 3.2 | 7.2 | 7.6 | 660 | 1900 | 3000 | 8.7 | 8.3 | 8.0 |
| | | 25+35+35 | 1.87 | 2.62 | 2.62 | 3.2 | 7.1 | 7.6 | 660 | 1780 | 3000 | 8.2 | 7.8 | 7.5 |
| | | 25+35+50 | 1.64 | 2.29 | 3.27 | 3.2 | 7.2 | 7.6 | 660 | 1900 | 3000 | 8.7 | 8.3 | 8.0 |
| | | 35+35+35 | 2.40 | 2.40 | 2.40 | 3.2 | 7.2 | 7.6 | 660 | 1900 | 3000 | 8.7 | 8.3 | 8.0 |

| Indoor unit combination | | | Cooling capacity (kW) | | | | | | Power consumption(W) | | | Standard current(A) | | |
|---|---|---|---|---|---|---|---|---|---|---|---|---|---|---|
| | | | Room cooling capacity | | | Total capacity | | | | | | | | |
| | | | A | B | C | Min. | Standard | Max. | Min. | Standard | Max. | 220V | 230V | 240V |
| Cooling operation | 1 room | 20 | 2.0 | - | - | 1.8 | 2.0 | 2.7 | 500 | 570 | 950 | 2.6 | 2.5 | 2.4 |
| | | 25 | 2.5 | - | - | 1.8 | 2.5 | 3.2 | 500 | 760 | 1080 | 3.5 | 3.3 | 3.2 |
| | | 35 | 3.5 | - | - | 1.8 | 3.5 | 3.7 | 500 | 1150 | 1240 | 5.3 | 5.1 | 4.8 |
| | | 50 | 5.0 | - | - | 1.8 | 5.0 | 5.6 | 500 | 1860 | 2100 | 8.5 | 8.2 | 7.8 |
| | | 60 | 6.0 | - | - | 1.8 | 6.0 | 6.1 | 500 | 2350 | 2370 | 10.8 | 10.3 | 9.9 |
| | 2 room | 20+20 | 2.00 | 2.00 | - | 3.0 | 4.0 | 5.6 | 570 | 800 | 1750 | 3.7 | 3.5 | 3.4 |
| | | 20+25 | 2.00 | 2.50 | - | 3.0 | 4.5 | 5.8 | 570 | 1050 | 1910 | 4.8 | 4.6 | 4.4 |
| | | 20+35 | 1.93 | 3.37 | - | 3.0 | 5.3 | 6.1 | 570 | 1620 | 2110 | 7.4 | 7.1 | 6.8 |
| | | 20+50 | 1.89 | 4.71 | - | 3.0 | 6.6 | 6.8 | 570 | 2330 | 2390 | 10.7 | 10.2 | 9.8 |
| | | 20+60 | 1.68 | 5.03 | - | 3.0 | 6.7 | 6.8 | 570 | 2370 | 2390 | 10.9 | 10.4 | 10.0 |
| | | 25+25 | 2.45 | 2.45 | - | 3.0 | 4.9 | 6.1 | 570 | 1340 | 2110 | 6.2 | 5.9 | 5.6 |
| | | 25+35 | 2.42 | 3.38 | - | 3.0 | 5.8 | 6.4 | 570 | 1920 | 2270 | 8.8 | 8.4 | 8.1 |
| | | 25+50 | 2.23 | 4.47 | - | 3.0 | 6.7 | 6.8 | 570 | 2370 | 2390 | 10.9 | 10.4 | 10.0 |
| | | 25+60 | 1.97 | 4.73 | - | 3.0 | 6.7 | 6.8 | 570 | 2370 | 2390 | 10.9 | 10.4 | 10.0 |
| | | 35+35 | 3.30 | 3.30 | - | 3.0 | 6.6 | 6.8 | 570 | 2330 | 2390 | 10.7 | 10.2 | 9.8 |
| | | 35+50 | 2.76 | 3.94 | - | 3.0 | 6.7 | 6.8 | 570 | 2370 | 2390 | 10.9 | 10.4 | 10.0 |
| | | 35+60 | 2.47 | 4.23 | - | 3.0 | 6.7 | 6.8 | 570 | 2370 | 2390 | 10.9 | 10.4 | 10.0 |
| | | 50+50 | 3.35 | 3.35 | - | 3.0 | 6.7 | 6.8 | 570 | 2370 | 2390 | 10.9 | 10.4 | 10.0 |
| | | 50+60 | 3.05 | 3.65 | - | 3.0 | 6.7 | 6.8 | 570 | 2370 | 2390 | 10.9 | 10.4 | 10.0 |
| | 3 room | 20+20+20 | 2.00 | 2.00 | 2.00 | 3.6 | 6.0 | 7.3 | 690 | 1470 | 2390 | 6.7 | 6.5 | 6.2 |
| | | 20+20+25 | 1.85 | 1.85 | 2.31 | 3.6 | 6.0 | 7.3 | 690 | 1470 | 2390 | 6.7 | 6.5 | 6.2 |
| | | 20+20+35 | 1.60 | 1.60 | 2.80 | 3.6 | 6.0 | 7.3 | 690 | 1470 | 2390 | 6.7 | 6.5 | 6.2 |
| | | 20+20+50 | 1.40 | 1.40 | 3.50 | 3.6 | 6.3 | 7.3 | 690 | 1520 | 2390 | 7.0 | 6.7 | 6.4 |
| | | 20+20+60 | 1.28 | 1.28 | 3.84 | 3.6 | 6.4 | 7.3 | 690 | 1540 | 2390 | 7.1 | 6.8 | 6.5 |
| | | 20+25+25 | 1.69 | 2.11 | 2.11 | 3.6 | 5.9 | 7.3 | 690 | 1450 | 2390 | 6.7 | 6.4 | 6.1 |
| | | 20+25+35 | 1.53 | 1.91 | 2.67 | 3.6 | 6.1 | 7.3 | 690 | 1500 | 2390 | 6.9 | 6.6 | 6.3 |
| | | 20+25+50 | 1.35 | 1.68 | 3.37 | 3.6 | 6.4 | 7.3 | 690 | 1540 | 2390 | 7.1 | 6.8 | 6.5 |
| | | 20+25+60 | 1.26 | 1.57 | 3.77 | 3.6 | 6.6 | 7.3 | 690 | 1560 | 2390 | 7.2 | 6.9 | 6.6 |
| | | 20+35+35 | 1.40 | 2.45 | 2.45 | 3.6 | 6.3 | 7.3 | 690 | 1520 | 2390 | 7.0 | 6.7 | 6.4 |
| | | 20+35+50 | 1.26 | 2.20 | 3.14 | 3.6 | 6.6 | 7.3 | 690 | 1560 | 2390 | 7.2 | 6.9 | 6.6 |
| | | 25+25+25 | 2.00 | 2.00 | 2.00 | 3.6 | 6.0 | 7.3 | 690 | 1470 | 2390 | 6.7 | 6.5 | 6.2 |
| | | 25+25+35 | 1.79 | 1.79 | 2.51 | 3.6 | 6.1 | 7.3 | 690 | 1500 | 2390 | 6.9 | 6.6 | 6.3 |
| | | 25+25+50 | 1.60 | 1.60 | 3.20 | 3.6 | 6.4 | 7.3 | 690 | 1540 | 2390 | 7.1 | 6.8 | 6.5 |
| | | 25+25+60 | 1.52 | 1.52 | 3.65 | 3.6 | 6.7 | 7.3 | 690 | 1580 | 2390 | 7.3 | 6.9 | 6.6 |
| | | 25+35+35 | 1.68 | 2.36 | 2.36 | 3.6 | 6.4 | 7.3 | 690 | 1540 | 2390 | 7.1 | 6.8 | 6.5 |
| | | 25+35+50 | 1.52 | 2.13 | 3.05 | 3.6 | 6.7 | 7.3 | 690 | 1580 | 2390 | 7.3 | 6.9 | 6.6 |
| | | 35+35+35 | 2.20 | 2.20 | 2.20 | 3.6 | 6.6 | 7.3 | 690 | 1560 | 2390 | 7.2 | 6.9 | 6.6 |

## SCM71ZM-S1 Table of Indoor unit combination only with SRK-ZSX type

| Indoor unit combination | | | Heating capacity (kW) | | | | | | | Power consumption(W) | | | Standard current(A) | | |
|---|---|---|---|---|---|---|---|---|---|---|---|---|---|---|---|
| | | | Room heating capacity | | | | Total capacity | | | | | | | | |
| | | | A | B | C | D | Min. | Standard | Max. | Min. | Standard | Max. | 220V | 230V | 240V |
| Heating operation | 1 room | 20 | 3.0 | - | - | - | 1.5 | 3.0 | 3.7 | 600 | 840 | 1330 | 3.9 | 3.7 | 3.5 |
| | | 25 | 3.4 | - | - | - | 1.5 | 3.4 | 4.2 | 600 | 1000 | 1510 | 4.6 | 4.4 | 4.2 |
| | | 35 | 4.5 | - | - | - | 1.5 | 4.5 | 5.0 | 600 | 1330 | 1790 | 6.1 | 5.8 | 5.6 |
| | | 50 | 5.8 | - | - | - | 1.5 | 5.8 | 6.5 | 600 | 1780 | 2310 | 8.2 | 7.8 | 7.5 |
| | | 60 | 6.8 | - | - | - | 1.5 | 6.8 | 7.5 | 600 | 2100 | 2660 | 9.6 | 9.2 | 8.8 |
| | 2 room | 20 + 20 | 2.70 | 2.70 | - | - | 2.1 | 5.4 | 7.4 | 630 | 1340 | 1870 | 6.2 | 5.9 | 5.6 |
| | | 20 + 25 | 2.62 | 3.28 | - | - | 2.1 | 5.9 | 7.7 | 630 | 1530 | 2130 | 7.0 | 6.7 | 6.4 |
| | | 20 + 35 | 2.51 | 4.39 | - | - | 2.1 | 6.9 | 8.3 | 630 | 1910 | 2650 | 8.8 | 8.4 | 8.0 |
| | | 20 + 50 | 2.34 | 5.86 | - | - | 2.1 | 8.2 | 8.7 | 630 | 2430 | 3350 | 11.2 | 10.7 | 10.2 |
| | | 20 + 60 | 2.05 | 6.15 | - | - | 2.1 | 8.2 | 8.7 | 630 | 2430 | 3350 | 11.2 | 10.7 | 10.2 |
| | | 25 + 25 | 3.20 | 3.20 | - | - | 2.1 | 6.4 | 8.1 | 630 | 1700 | 2480 | 7.8 | 7.5 | 7.2 |
| | | 25 + 35 | 3.08 | 4.32 | - | - | 2.1 | 7.4 | 8.6 | 630 | 2090 | 2910 | 9.6 | 9.2 | 8.8 |
| | | 25 + 50 | 2.73 | 5.47 | - | - | 2.1 | 8.2 | 8.7 | 630 | 2430 | 3350 | 11.2 | 10.7 | 10.2 |
| | | 25 + 60 | 2.41 | 5.79 | - | - | 2.1 | 8.2 | 8.7 | 630 | 2430 | 3350 | 11.2 | 10.7 | 10.2 |
| | | 35 + 35 | 4.10 | 4.10 | - | - | 2.1 | 8.2 | 8.7 | 630 | 2430 | 3350 | 11.2 | 10.7 | 10.2 |
| | | 35 + 50 | 3.38 | 4.82 | - | - | 2.1 | 8.2 | 8.7 | 630 | 2430 | 3350 | 11.2 | 10.7 | 10.2 |
| | | 35 + 60 | 3.02 | 5.18 | - | - | 2.1 | 8.2 | 8.7 | 630 | 2430 | 3350 | 11.2 | 10.7 | 10.2 |
| | | 50 + 50 | 4.10 | 4.10 | - | - | 2.1 | 8.2 | 8.7 | 630 | 2430 | 3350 | 11.2 | 10.7 | 10.2 |
| | | 50 + 60 | 3.73 | 4.47 | - | - | 2.1 | 8.2 | 8.7 | 630 | 2430 | 3350 | 11.2 | 10.7 | 10.2 |
| | | 60 + 60 | 4.10 | 4.10 | - | - | 2.1 | 8.2 | 8.7 | 630 | 2430 | 3350 | 11.2 | 10.7 | 10.2 |
| | 3 room | 20 + 20 + 20 | 2.57 | 2.57 | 2.57 | - | 3.2 | 7.7 | 9.1 | 660 | 1830 | 3350 | 8.4 | 8.0 | 7.7 |
| | | 20 + 20 + 25 | 2.46 | 2.46 | 3.08 | - | 3.2 | 8.0 | 9.1 | 660 | 1930 | 3350 | 8.9 | 8.5 | 8.1 |
| | | 20 + 20 + 35 | 2.24 | 2.24 | 3.92 | - | 3.2 | 8.4 | 9.1 | 660 | 2060 | 3350 | 9.5 | 9.0 | 8.7 |
| | | 20 + 20 + 50 | 1.87 | 1.87 | 4.67 | - | 3.2 | 8.4 | 9.1 | 660 | 2060 | 3350 | 9.5 | 9.0 | 8.7 |
| | | 20 + 20 + 60 | 1.68 | 1.68 | 5.04 | - | 3.2 | 8.4 | 9.1 | 660 | 2060 | 3350 | 9.5 | 9.0 | 8.7 |
| | | 20 + 25 + 25 | 2.34 | 2.93 | 2.93 | - | 3.2 | 8.2 | 9.1 | 660 | 1990 | 3350 | 9.1 | 8.7 | 8.4 |
| | | 20 + 25 + 35 | 2.10 | 2.63 | 3.68 | - | 3.2 | 8.4 | 9.1 | 660 | 2060 | 3350 | 9.5 | 9.0 | 8.7 |
| | | 20 + 25 + 50 | 1.77 | 2.21 | 4.42 | - | 3.2 | 8.4 | 9.1 | 660 | 2060 | 3350 | 9.5 | 9.0 | 8.7 |
| | | 20 + 25 + 60 | 1.60 | 2.00 | 4.80 | - | 3.2 | 8.4 | 9.1 | 660 | 2060 | 3350 | 9.5 | 9.0 | 8.7 |
| | | 20 + 35 + 35 | 1.87 | 3.27 | 3.27 | - | 3.2 | 8.4 | 9.1 | 660 | 2060 | 3350 | 9.5 | 9.0 | 8.7 |
| | | 20 + 35 + 50 | 1.60 | 2.80 | 4.00 | - | 3.2 | 8.4 | 9.1 | 660 | 2060 | 3350 | 9.5 | 9.0 | 8.7 |
| | | 20 + 35 + 60 | 1.46 | 2.56 | 4.38 | - | 3.2 | 8.4 | 9.1 | 660 | 2060 | 3350 | 9.5 | 9.0 | 8.7 |
| | | 20 + 50 + 50 | 1.40 | 3.50 | 3.50 | - | 3.2 | 8.4 | 9.1 | 660 | 2060 | 3350 | 9.5 | 9.0 | 8.7 |
| | | 25 + 25 + 25 | 2.80 | 2.80 | 2.80 | - | 3.2 | 8.4 | 9.1 | 660 | 2060 | 3350 | 9.5 | 9.0 | 8.7 |
| | | 25 + 25 + 35 | 2.47 | 2.47 | 3.46 | - | 3.2 | 8.4 | 9.1 | 660 | 2060 | 3350 | 9.5 | 9.0 | 8.7 |
| | | 25 + 25 + 50 | 2.10 | 2.10 | 4.20 | - | 3.2 | 8.4 | 9.1 | 660 | 2060 | 3350 | 9.5 | 9.0 | 8.7 |
| | | 25 + 25 + 60 | 1.91 | 1.91 | 4.58 | - | 3.2 | 8.4 | 9.1 | 660 | 2060 | 3350 | 9.5 | 9.0 | 8.7 |
| | | 25 + 35 + 35 | 2.21 | 3.09 | 3.09 | - | 3.2 | 8.4 | 9.1 | 660 | 2060 | 3350 | 9.5 | 9.0 | 8.7 |
| | | 25 + 35 + 50 | 1.91 | 2.67 | 3.82 | - | 3.2 | 8.4 | 9.1 | 660 | 2060 | 3350 | 9.5 | 9.0 | 8.7 |
| | | 25 + 35 + 60 | 1.75 | 2.45 | 4.20 | - | 3.2 | 8.4 | 9.1 | 660 | 2060 | 3350 | 9.5 | 9.0 | 8.7 |
| | | 25 + 50 + 50 | 1.68 | 3.36 | 3.36 | - | 3.2 | 8.4 | 9.1 | 660 | 2060 | 3350 | 9.5 | 9.0 | 8.7 |
| | | 35 + 35 + 35 | 2.80 | 2.80 | 2.80 | - | 3.2 | 8.4 | 9.1 | 660 | 2060 | 3350 | 9.5 | 9.0 | 8.7 |
| | | 35 + 35 + 50 | 2.45 | 2.45 | 3.50 | - | 3.2 | 8.4 | 9.1 | 660 | 2060 | 3350 | 9.5 | 9.0 | 8.7 |
| | 4 room | 20 + 20 + 20 + 20 | 2.10 | 2.10 | 2.10 | 2.10 | 3.6 | 8.4 | 9.4 | 800 | 1960 | 3350 | 9.0 | 8.6 | 8.2 |
| | | 20 + 20 + 20 + 25 | 1.98 | 1.98 | 1.98 | 2.47 | 3.6 | 8.4 | 9.4 | 800 | 1960 | 3350 | 9.0 | 8.6 | 8.2 |
| | | 20 + 20 + 20 + 35 | 1.79 | 1.79 | 1.79 | 3.13 | 3.6 | 8.5 | 9.4 | 800 | 1980 | 3350 | 9.1 | 8.7 | 8.3 |
| | | 20 + 20 + 20 + 50 | 1.56 | 1.56 | 1.56 | 3.91 | 3.6 | 8.6 | 9.4 | 800 | 2000 | 3350 | 9.2 | 8.8 | 8.4 |
| | | 20 + 20 + 20 + 60 | 1.43 | 1.43 | 1.43 | 4.30 | 3.6 | 8.6 | 9.4 | 800 | 2000 | 3350 | 9.2 | 8.8 | 8.4 |
| | | 20 + 20 + 25 + 25 | 1.89 | 1.89 | 2.36 | 2.36 | 3.6 | 8.5 | 9.4 | 800 | 1980 | 3350 | 9.1 | 8.7 | 8.3 |
| | | 20 + 20 + 25 + 35 | 1.70 | 1.70 | 2.13 | 2.98 | 3.6 | 8.5 | 9.4 | 800 | 1980 | 3350 | 9.1 | 8.7 | 8.3 |
| | | 20 + 20 + 25 + 50 | 1.50 | 1.50 | 1.87 | 3.74 | 3.6 | 8.6 | 9.4 | 800 | 2000 | 3350 | 9.2 | 8.8 | 8.4 |
| | | 20 + 20 + 25 + 60 | 1.38 | 1.38 | 1.72 | 4.13 | 3.6 | 8.6 | 9.4 | 800 | 2000 | 3350 | 9.2 | 8.8 | 8.4 |
| | | 20 + 20 + 35 + 35 | 1.56 | 1.56 | 2.74 | 2.74 | 3.6 | 8.6 | 9.4 | 800 | 2000 | 3350 | 9.2 | 8.8 | 8.4 |
| | | 20 + 20 + 35 + 50 | 1.38 | 1.38 | 2.41 | 3.44 | 3.6 | 8.6 | 9.4 | 800 | 2000 | 3350 | 9.2 | 8.8 | 8.4 |
| | | 20 + 25 + 25 + 25 | 1.79 | 2.24 | 2.24 | 2.24 | 3.6 | 8.5 | 9.4 | 800 | 1980 | 3350 | 9.1 | 8.7 | 8.3 |
| | | 20 + 25 + 25 + 35 | 1.64 | 2.05 | 2.05 | 2.87 | 3.6 | 8.6 | 9.4 | 800 | 2000 | 3350 | 9.2 | 8.8 | 8.4 |
| | | 20 + 25 + 25 + 50 | 1.43 | 1.79 | 1.79 | 3.58 | 3.6 | 8.6 | 9.4 | 800 | 2000 | 3350 | 9.2 | 8.8 | 8.4 |
| | | 20 + 25 + 35 + 35 | 1.50 | 1.87 | 2.62 | 2.62 | 3.6 | 8.6 | 9.4 | 800 | 2000 | 3350 | 9.2 | 8.8 | 8.4 |
| | | 20 + 35 + 35 + 35 | 1.38 | 2.41 | 2.41 | 2.41 | 3.6 | 8.6 | 9.4 | 800 | 2000 | 3350 | 9.2 | 8.8 | 8.4 |
| | | 25 + 25 + 25 + 25 | 2.13 | 2.13 | 2.13 | 2.13 | 3.6 | 8.5 | 9.4 | 800 | 1980 | 3350 | 9.1 | 8.7 | 8.3 |
| | | 25 + 25 + 25 + 35 | 1.95 | 1.95 | 1.95 | 2.74 | 3.6 | 8.6 | 9.4 | 800 | 2000 | 3350 | 9.2 | 8.8 | 8.4 |
| | | 25 + 25 + 25 + 50 | 1.72 | 1.72 | 1.72 | 3.44 | 3.6 | 8.6 | 9.4 | 800 | 2000 | 3350 | 9.2 | 8.8 | 8.4 |
| | | 25 + 25 + 35 + 35 | 1.79 | 1.79 | 2.51 | 2.51 | 3.6 | 8.6 | 9.4 | 800 | 2000 | 3350 | 9.2 | 8.8 | 8.4 |

| Indoor unit combination | | | Cooling capacity (kW) | | | | | | | Power consumption(W) | | | Standard current(A) | | |
|---|---|---|---|---|---|---|---|---|---|---|---|---|---|---|---|
| | | | Room cooling capacity | | | | Total capacity | | | | | | | | |
| | | | A | B | C | D | Min. | Standard | Max. | Min. | Standard | Max. | 220V | 230V | 240V |
| Cooling operation | 1 room | 20 | 2.0 | - | - | - | 1.8 | 2.0 | 2.8 | 480 | 500 | 950 | 2.3 | 2.2 | 2.1 |
| | | 25 | 2.5 | - | - | - | 1.8 | 2.5 | 3.4 | 480 | 680 | 1080 | 3.1 | 3.0 | 2.9 |
| | | 35 | 3.5 | - | - | - | 1.8 | 3.5 | 3.9 | 480 | 1010 | 1240 | 4.6 | 4.4 | 4.3 |
| | | 50 | 5.0 | - | - | - | 1.8 | 5.0 | 6.1 | 480 | 1530 | 2100 | 7.0 | 6.7 | 6.4 |
| | | 60 | 6.0 | - | - | - | 1.8 | 6.0 | 7.0 | 480 | 1880 | 2700 | 8.6 | 8.3 | 7.9 |
| | 2 room | 20 + 20 | 2.00 | 2.00 | - | - | 3.0 | 4.0 | 6.1 | 550 | 830 | 1910 | 3.8 | 3.6 | 3.5 |
| | | 20 + 25 | 2.00 | 2.50 | - | - | 3.0 | 4.5 | 6.4 | 550 | 1030 | 2060 | 4.7 | 4.5 | 4.3 |
| | | 20 + 35 | 2.00 | 3.50 | - | - | 3.0 | 5.5 | 6.9 | 550 | 1390 | 2320 | 6.4 | 6.1 | 5.9 |
| | | 20 + 50 | 1.94 | 4.86 | - | - | 3.0 | 6.8 | 7.7 | 550 | 1860 | 2750 | 8.5 | 8.2 | 7.8 |
| | | 20 + 60 | 1.70 | 5.10 | - | - | 3.0 | 6.8 | 7.7 | 550 | 1860 | 2750 | 8.5 | 8.2 | 7.8 |

R410A

# MULTI-SPLIT SYSTEM

| Indoor unit combination | | | Cooling capacity (kW) | | | | | | | Power consumption(W) | | | Standard current(A) | | |
|---|---|---|---|---|---|---|---|---|---|---|---|---|---|---|---|
| | | | Room cooling capacity | | | | Total capacity | | | Min. | Standard | Max. | 220V | 230V | 240V |
| | | | A | B | C | D | Min. | Standard | Max. | | | | | | |
| Cooling operation | 2 room | 25 + 25 | 2.50 | 2.50 | - | - | 3.0 | 5.0 | 6.8 | 550 | 1190 | 2270 | 5.5 | 5.2 | 5.0 |
| | | 25 + 35 | 2.46 | 3.44 | - | - | 3.0 | 5.9 | 7.2 | 550 | 1560 | 2470 | 7.2 | 6.9 | 6.6 |
| | | 25 + 50 | 2.27 | 4.53 | - | - | 3.0 | 6.8 | 7.7 | 550 | 1860 | 2750 | 8.5 | 8.2 | 7.8 |
| | | 25 + 60 | 2.00 | 4.80 | - | - | 3.0 | 6.8 | 7.7 | 550 | 1860 | 2750 | 8.5 | 8.2 | 7.8 |
| | | 35 + 35 | 3.40 | 3.40 | - | - | 3.0 | 6.8 | 7.6 | 550 | 1860 | 2680 | 8.5 | 8.2 | 7.8 |
| | | 35 + 50 | 2.80 | 4.00 | - | - | 3.0 | 6.8 | 7.7 | 550 | 1860 | 2750 | 8.5 | 8.2 | 7.8 |
| | | 35 + 60 | 2.51 | 4.29 | - | - | 3.0 | 6.8 | 7.7 | 550 | 1860 | 2750 | 8.5 | 8.2 | 7.8 |
| | | 50 + 50 | 3.40 | 3.40 | - | - | 3.0 | 6.8 | 7.7 | 550 | 1860 | 2750 | 8.5 | 8.2 | 7.8 |
| | | 50 + 60 | 3.09 | 3.71 | - | - | 3.0 | 6.8 | 7.7 | 550 | 1860 | 2750 | 8.5 | 8.2 | 7.8 |
| | | 60 + 60 | 3.40 | 3.40 | - | - | 3.0 | 6.8 | 7.7 | 550 | 1860 | 2750 | 8.5 | 8.2 | 7.8 |
| | 3 room | 20 + 20 + 20 | 2.00 | 2.00 | 2.00 | - | 3.7 | 6.0 | 8.2 | 670 | 1300 | 2750 | 6.0 | 5.7 | 5.5 |
| | | 20 + 20 + 25 | 2.00 | 2.00 | 2.50 | - | 3.7 | 6.5 | 8.2 | 670 | 1450 | 2750 | 6.7 | 6.4 | 6.1 |
| | | 20 + 20 + 35 | 1.84 | 1.84 | 3.22 | - | 3.7 | 6.9 | 8.2 | 670 | 1670 | 2750 | 7.7 | 7.3 | 7.0 |
| | | 20 + 20 + 50 | 1.53 | 1.53 | 3.83 | - | 3.7 | 6.9 | 8.2 | 670 | 1670 | 2750 | 7.7 | 7.3 | 7.0 |
| | | 20 + 20 + 60 | 1.38 | 1.38 | 4.14 | - | 3.7 | 6.9 | 8.2 | 670 | 1670 | 2750 | 7.7 | 7.3 | 7.0 |
| | | 20 + 25 + 25 | 1.94 | 2.43 | 2.43 | - | 3.7 | 6.8 | 8.2 | 670 | 1610 | 2750 | 7.4 | 7.1 | 6.8 |
| | | 20 + 25 + 35 | 1.73 | 2.16 | 3.02 | - | 3.7 | 6.9 | 8.2 | 670 | 1670 | 2750 | 7.7 | 7.3 | 7.0 |
| | | 20 + 25 + 50 | 1.45 | 1.82 | 3.63 | - | 3.7 | 6.9 | 8.2 | 670 | 1670 | 2750 | 7.7 | 7.3 | 7.0 |
| | | 20 + 25 + 60 | 1.31 | 1.64 | 3.94 | - | 3.7 | 6.9 | 8.2 | 670 | 1670 | 2750 | 7.7 | 7.3 | 7.0 |
| | | 20 + 35 + 35 | 1.53 | 2.68 | 2.68 | - | 3.7 | 6.9 | 8.2 | 670 | 1670 | 2750 | 7.7 | 7.3 | 7.0 |
| | | 20 + 35 + 50 | 1.31 | 2.30 | 3.29 | - | 3.7 | 6.9 | 8.2 | 670 | 1670 | 2750 | 7.7 | 7.3 | 7.0 |
| | | 20 + 35 + 60 | 1.20 | 2.10 | 3.60 | - | 3.7 | 6.9 | 8.2 | 670 | 1670 | 2750 | 7.7 | 7.3 | 7.0 |
| | | 20 + 50 + 50 | 1.15 | 2.88 | 2.88 | - | 3.7 | 6.9 | 8.2 | 670 | 1670 | 2750 | 7.7 | 7.3 | 7.0 |
| | | 25 + 25 + 25 | 2.30 | 2.30 | 2.30 | - | 3.7 | 6.9 | 8.2 | 670 | 1670 | 2750 | 7.7 | 7.3 | 7.0 |
| | | 25 + 25 + 35 | 2.03 | 2.03 | 2.84 | - | 3.7 | 6.9 | 8.2 | 670 | 1670 | 2750 | 7.7 | 7.3 | 7.0 |
| | | 25 + 25 + 50 | 1.73 | 1.73 | 3.45 | - | 3.7 | 6.9 | 8.2 | 670 | 1670 | 2750 | 7.7 | 7.3 | 7.0 |
| | | 25 + 25 + 60 | 1.57 | 1.57 | 3.76 | - | 3.7 | 6.9 | 8.2 | 670 | 1670 | 2750 | 7.7 | 7.3 | 7.0 |
| | | 25 + 35 + 35 | 1.82 | 2.54 | 2.54 | - | 3.7 | 6.9 | 8.2 | 670 | 1670 | 2750 | 7.7 | 7.3 | 7.0 |
| | | 25 + 35 + 50 | 1.57 | 2.20 | 3.14 | - | 3.7 | 6.9 | 8.2 | 670 | 1670 | 2750 | 7.7 | 7.3 | 7.0 |
| | | 25 + 35 + 60 | 1.44 | 2.01 | 3.45 | - | 3.7 | 6.9 | 8.2 | 670 | 1670 | 2750 | 7.7 | 7.3 | 7.0 |
| | | 25 + 50 + 50 | 1.38 | 2.76 | 2.76 | - | 3.7 | 6.9 | 8.2 | 670 | 1670 | 2750 | 7.7 | 7.3 | 7.0 |
| | | 35 + 35 + 35 | 2.30 | 2.30 | 2.30 | - | 3.7 | 6.9 | 8.2 | 670 | 1670 | 2750 | 7.7 | 7.3 | 7.0 |
| | | 35 + 35 + 50 | 2.01 | 2.01 | 2.88 | - | 3.7 | 6.9 | 8.2 | 670 | 1670 | 2750 | 7.7 | 7.3 | 7.0 |
| | 4 room | 20 + 20 + 20 + 20 | 1.73 | 1.73 | 1.73 | 1.73 | 4.4 | 6.9 | 8.8 | 890 | 1550 | 2750 | 7.1 | 6.8 | 6.5 |
| | | 20 + 20 + 20 + 25 | 1.62 | 1.62 | 1.62 | 2.03 | 4.4 | 6.9 | 8.8 | 890 | 1550 | 2750 | 7.1 | 6.8 | 6.5 |
| | | 20 + 20 + 20 + 35 | 1.49 | 1.49 | 1.49 | 2.62 | 4.4 | 7.1 | 8.8 | 890 | 1580 | 2750 | 7.3 | 6.9 | 6.6 |
| | | 20 + 20 + 20 + 50 | 1.29 | 1.29 | 1.29 | 3.23 | 4.4 | 7.1 | 8.8 | 890 | 1580 | 2750 | 7.3 | 6.9 | 6.6 |
| | | 20 + 20 + 20 + 60 | 1.18 | 1.18 | 1.18 | 3.55 | 4.4 | 7.1 | 8.8 | 890 | 1580 | 2750 | 7.3 | 6.9 | 6.6 |
| | | 20 + 20 + 25 + 25 | 1.53 | 1.53 | 1.92 | 1.92 | 4.4 | 6.9 | 8.8 | 890 | 1550 | 2750 | 7.1 | 6.8 | 6.5 |
| | | 20 + 20 + 25 + 35 | 1.42 | 1.42 | 1.78 | 2.49 | 4.4 | 7.1 | 8.8 | 890 | 1580 | 2750 | 7.3 | 6.9 | 6.6 |
| | | 20 + 20 + 25 + 50 | 1.23 | 1.23 | 1.54 | 3.09 | 4.4 | 7.1 | 8.8 | 890 | 1580 | 2750 | 7.3 | 6.9 | 6.6 |
| | | 20 + 20 + 25 + 60 | 1.14 | 1.14 | 1.42 | 3.41 | 4.4 | 7.1 | 8.8 | 890 | 1580 | 2750 | 7.3 | 6.9 | 6.6 |
| | | 20 + 20 + 35 + 35 | 1.29 | 1.29 | 2.26 | 2.26 | 4.4 | 7.1 | 8.8 | 890 | 1580 | 2750 | 7.3 | 6.9 | 6.6 |
| | | 20 + 20 + 35 + 50 | 1.14 | 1.14 | 1.99 | 2.84 | 4.4 | 7.1 | 8.8 | 890 | 1580 | 2750 | 7.3 | 6.9 | 6.6 |
| | | 20 + 25 + 25 + 25 | 1.49 | 1.87 | 1.87 | 1.87 | 4.4 | 7.1 | 8.8 | 890 | 1580 | 2750 | 7.3 | 6.9 | 6.6 |
| | | 20 + 25 + 25 + 35 | 1.35 | 1.69 | 1.69 | 2.37 | 4.4 | 7.1 | 8.8 | 890 | 1580 | 2750 | 7.3 | 6.9 | 6.6 |
| | | 20 + 25 + 25 + 50 | 1.18 | 1.48 | 1.48 | 2.96 | 4.4 | 7.1 | 8.8 | 890 | 1580 | 2750 | 7.3 | 6.9 | 6.6 |
| | | 20 + 25 + 35 + 35 | 1.23 | 1.54 | 2.16 | 2.16 | 4.4 | 7.1 | 8.8 | 890 | 1580 | 2750 | 7.3 | 6.9 | 6.6 |
| | | 20 + 35 + 35 + 35 | 1.14 | 1.99 | 1.99 | 1.99 | 4.4 | 7.1 | 8.8 | 890 | 1580 | 2750 | 7.3 | 6.9 | 6.6 |
| | | 25 + 25 + 25 + 25 | 1.78 | 1.78 | 1.78 | 1.78 | 4.4 | 7.1 | 8.8 | 890 | 1580 | 2750 | 7.3 | 6.9 | 6.6 |
| | | 25 + 25 + 25 + 35 | 1.61 | 1.61 | 1.61 | 2.26 | 4.4 | 7.1 | 8.8 | 890 | 1580 | 2750 | 7.3 | 6.9 | 6.6 |
| | | 25 + 25 + 25 + 50 | 1.42 | 1.42 | 1.42 | 2.84 | 4.4 | 7.1 | 8.8 | 890 | 1580 | 2750 | 7.3 | 6.9 | 6.6 |
| | | 25 + 25 + 35 + 35 | 1.48 | 1.48 | 2.07 | 2.07 | 4.4 | 7.1 | 8.8 | 890 | 1580 | 2750 | 7.3 | 6.9 | 6.6 |

## SCM71ZM-S1 Table of Indoor unit combination with other indoor unit

| Indoor unit combination | | | Heating capacity (kW) | | | | | | | Power consumption(W) | | | Standard current(A) | | |
|---|---|---|---|---|---|---|---|---|---|---|---|---|---|---|---|
| | | | Room heating capacity | | | | Total capacity | | | Min. | Standard | Max. | 220V | 230V | 240V |
| | | | A | B | C | D | Min. | Standard | Max. | | | | | | |
| Heating operation | 1 room | 20 | 3.0 | - | - | - | 1.5 | 3.0 | 3.5 | 600 | 1060 | 1330 | 4.9 | 4.7 | 4.5 |
| | | 25 | 3.4 | - | - | - | 1.5 | 3.4 | 4.0 | 600 | 1220 | 1510 | 5.6 | 5.4 | 5.1 |
| | | 35 | 4.5 | - | - | - | 1.5 | 4.5 | 4.8 | 600 | 1510 | 1790 | 6.9 | 6.6 | 6.4 |
| | | 50 | 5.8 | - | - | - | 1.5 | 5.8 | 6.2 | 600 | 1950 | 2310 | 9.0 | 8.6 | 8.2 |
| | | 60 | 6.8 | - | - | - | 1.5 | 6.8 | 7.1 | 600 | 2240 | 2660 | 10.3 | 9.8 | 9.4 |
| | 2 room | 20 + 20 | 2.70 | 2.70 | - | - | 2.1 | 5.4 | 7.0 | 630 | 1370 | 1870 | 6.3 | 6.0 | 5.8 |
| | | 20 + 25 | 2.62 | 3.28 | - | - | 2.1 | 5.9 | 7.3 | 630 | 1560 | 2130 | 7.2 | 6.9 | 6.6 |
| | | 20 + 35 | 2.51 | 4.39 | - | - | 2.1 | 6.9 | 7.9 | 630 | 1950 | 2650 | 9.0 | 8.6 | 8.2 |
| | | 20 + 50 | 2.34 | 5.86 | - | - | 2.1 | 8.2 | 8.3 | 630 | 2490 | 3350 | 11.4 | 10.9 | 10.5 |
| | | 20 + 60 | 2.05 | 6.15 | - | - | 2.1 | 8.2 | 8.3 | 630 | 2490 | 3350 | 11.4 | 10.9 | 10.5 |
| | | 25 + 25 | 3.20 | 3.20 | - | - | 2.1 | 6.4 | 7.7 | 630 | 1740 | 2480 | 8.0 | 7.6 | 7.3 |
| | | 25 + 35 | 3.08 | 4.32 | - | - | 2.1 | 7.4 | 8.2 | 630 | 2130 | 2910 | 9.8 | 9.4 | 9.0 |
| | | 25 + 50 | 2.73 | 5.47 | - | - | 2.1 | 8.2 | 8.3 | 630 | 2490 | 3350 | 11.4 | 10.9 | 10.5 |
| | | 25 + 60 | 2.41 | 5.79 | - | - | 2.1 | 8.2 | 8.3 | 630 | 2490 | 3350 | 11.4 | 10.9 | 10.5 |
| | | 35 + 35 | 4.10 | 4.10 | - | - | 2.1 | 8.2 | 8.3 | 630 | 2490 | 3350 | 11.4 | 10.9 | 10.5 |
| | | 35 + 50 | 3.38 | 4.82 | - | - | 2.1 | 8.2 | 8.3 | 630 | 2490 | 3350 | 11.4 | 10.9 | 10.5 |
| | | 35 + 60 | 3.02 | 5.18 | - | - | 2.1 | 8.2 | 8.3 | 630 | 2490 | 3350 | 11.4 | 10.9 | 10.5 |

| Indoor unit combination | | | Heating capacity (kW) | | | | | | | Power consumption(W) | | | Standard current(A) | | |
|---|---|---|---|---|---|---|---|---|---|---|---|---|---|---|---|
| | | | Room heating capacity | | | | Total capacity | | | Min. | Standard | Max. | 220V | 230V | 240V |
| | | | A | B | C | D | Min. | Standard | Max. | | | | | | |
| Heating operation | 2 room | 50 + 50 | 4.10 | 4.10 | - | - | 2.1 | 8.2 | 8.3 | 630 | 2490 | 3350 | 11.4 | 10.9 | 10.5 |
| | | 50 + 60 | 3.73 | 4.47 | - | - | 2.1 | 8.2 | 8.3 | 630 | 2490 | 3350 | 11.4 | 10.9 | 10.5 |
| | | 60 + 60 | 4.10 | 4.10 | - | - | 2.1 | 8.2 | 8.3 | 630 | 2490 | 3350 | 11.4 | 10.9 | 10.5 |
| | 3 room | 20 + 20 + 20 | 2.57 | 2.57 | 2.57 | - | 3.2 | 7.7 | 8.9 | 660 | 1870 | 3350 | 8.6 | 8.2 | 7.9 |
| | | 20 + 20 + 25 | 2.46 | 2.46 | 3.08 | - | 3.2 | 8.0 | 8.9 | 660 | 1970 | 3350 | 9.0 | 8.7 | 8.3 |
| | | 20 + 20 + 35 | 2.24 | 2.24 | 3.92 | - | 3.2 | 8.4 | 8.9 | 660 | 2100 | 3350 | 9.6 | 9.2 | 8.8 |
| | | 20 + 20 + 50 | 1.87 | 1.87 | 4.67 | - | 3.2 | 8.4 | 8.9 | 660 | 2100 | 3350 | 9.6 | 9.2 | 8.8 |
| | | 20 + 20 + 60 | 1.68 | 1.68 | 5.04 | - | 3.2 | 8.4 | 8.9 | 660 | 2100 | 3350 | 9.6 | 9.2 | 8.8 |
| | | 20 + 25 + 25 | 2.34 | 2.93 | 2.93 | - | 3.2 | 8.2 | 8.9 | 660 | 2030 | 3350 | 9.3 | 8.9 | 8.5 |
| | | 20 + 25 + 35 | 2.10 | 2.63 | 3.68 | - | 3.2 | 8.4 | 8.9 | 660 | 2100 | 3350 | 9.6 | 9.2 | 8.8 |
| | | 20 + 25 + 50 | 1.77 | 2.21 | 4.42 | - | 3.2 | 8.4 | 8.9 | 660 | 2100 | 3350 | 9.6 | 9.2 | 8.8 |
| | | 20 + 25 + 60 | 1.60 | 2.00 | 4.80 | - | 3.2 | 8.4 | 8.9 | 660 | 2100 | 3350 | 9.6 | 9.2 | 8.8 |
| | | 20 + 35 + 35 | 1.87 | 3.27 | 3.27 | - | 3.2 | 8.4 | 8.9 | 660 | 2100 | 3350 | 9.6 | 9.2 | 8.8 |
| | | 20 + 35 + 50 | 1.60 | 2.80 | 4.00 | - | 3.2 | 8.4 | 8.9 | 660 | 2100 | 3350 | 9.6 | 9.2 | 8.8 |
| | | 20 + 35 + 60 | 1.46 | 2.56 | 4.38 | - | 3.2 | 8.4 | 8.9 | 660 | 2100 | 3350 | 9.6 | 9.2 | 8.8 |
| | | 20 + 50 + 50 | 1.40 | 3.50 | 3.50 | - | 3.2 | 8.4 | 8.9 | 660 | 2100 | 3350 | 9.6 | 9.2 | 8.8 |
| | | 25 + 25 + 25 | 2.80 | 2.80 | 2.80 | - | 3.2 | 8.4 | 8.9 | 660 | 2100 | 3350 | 9.6 | 9.2 | 8.8 |
| | | 25 + 25 + 35 | 2.47 | 2.47 | 3.46 | - | 3.2 | 8.4 | 8.9 | 660 | 2100 | 3350 | 9.6 | 9.2 | 8.8 |
| | | 25 + 25 + 50 | 2.10 | 2.10 | 4.20 | - | 3.2 | 8.4 | 8.9 | 660 | 2100 | 3350 | 9.6 | 9.2 | 8.8 |
| | | 25 + 25 + 60 | 1.91 | 1.91 | 4.58 | - | 3.2 | 8.4 | 8.9 | 660 | 2100 | 3350 | 9.6 | 9.2 | 8.8 |
| | | 25 + 35 + 35 | 2.21 | 3.09 | 3.09 | - | 3.2 | 8.4 | 8.9 | 660 | 2100 | 3350 | 9.6 | 9.2 | 8.8 |
| | | 25 + 35 + 50 | 1.91 | 2.67 | 3.82 | - | 3.2 | 8.4 | 8.9 | 660 | 2100 | 3350 | 9.6 | 9.2 | 8.8 |
| | | 25 + 35 + 60 | 1.75 | 2.45 | 4.20 | - | 3.2 | 8.4 | 8.9 | 660 | 2100 | 3350 | 9.6 | 9.2 | 8.8 |
| | | 25 + 50 + 50 | 1.68 | 3.36 | 3.36 | - | 3.2 | 8.4 | 8.9 | 660 | 2100 | 3350 | 9.6 | 9.2 | 8.8 |
| | | 35 + 35 + 35 | 2.80 | 2.80 | 2.80 | - | 3.2 | 8.4 | 8.9 | 660 | 2100 | 3350 | 9.6 | 9.2 | 8.8 |
| | | 35 + 35 + 50 | 2.45 | 2.45 | 3.50 | - | 3.2 | 8.4 | 8.9 | 660 | 2100 | 3350 | 9.6 | 9.2 | 8.8 |
| | 4 room | 20 + 20 + 20 + 20 | 2.10 | 2.10 | 2.10 | 2.10 | 3.6 | 8.4 | 9.1 | 800 | 2010 | 3350 | 9.2 | 8.8 | 8.5 |
| | | 20 + 20 + 20 + 25 | 1.98 | 1.98 | 1.98 | 2.47 | 3.6 | 8.4 | 9.1 | 800 | 2010 | 3350 | 9.2 | 8.8 | 8.5 |
| | | 20 + 20 + 20 + 35 | 1.79 | 1.79 | 1.79 | 3.13 | 3.6 | 8.5 | 9.1 | 800 | 2030 | 3350 | 9.3 | 8.9 | 8.5 |
| | | 20 + 20 + 20 + 50 | 1.56 | 1.56 | 1.56 | 3.91 | 3.6 | 8.6 | 9.1 | 800 | 2050 | 3350 | 9.4 | 9.0 | 8.6 |
| | | 20 + 20 + 20 + 60 | 1.43 | 1.43 | 1.43 | 4.30 | 3.6 | 8.6 | 9.1 | 800 | 2050 | 3350 | 9.4 | 9.0 | 8.6 |
| | | 20 + 20 + 25 + 25 | 1.89 | 1.89 | 2.36 | 2.36 | 3.6 | 8.5 | 9.1 | 800 | 2030 | 3350 | 9.3 | 8.9 | 8.5 |
| | | 20 + 20 + 25 + 35 | 1.70 | 1.70 | 2.13 | 2.98 | 3.6 | 8.5 | 9.1 | 800 | 2030 | 3350 | 9.3 | 8.9 | 8.5 |
| | | 20 + 20 + 25 + 50 | 1.50 | 1.50 | 1.87 | 3.74 | 3.6 | 8.6 | 9.1 | 800 | 2050 | 3350 | 9.4 | 9.0 | 8.6 |
| | | 20 + 20 + 25 + 60 | 1.38 | 1.38 | 1.72 | 4.13 | 3.6 | 8.6 | 9.1 | 800 | 2050 | 3350 | 9.4 | 9.0 | 8.6 |
| | | 20 + 20 + 35 + 35 | 1.56 | 1.56 | 2.74 | 2.74 | 3.6 | 8.6 | 9.1 | 800 | 2050 | 3350 | 9.4 | 9.0 | 8.6 |
| | | 20 + 20 + 35 + 50 | 1.38 | 1.38 | 2.41 | 3.44 | 3.6 | 8.6 | 9.1 | 800 | 2050 | 3350 | 9.4 | 9.0 | 8.6 |
| | | 20 + 25 + 25 + 25 | 1.79 | 2.24 | 2.24 | 2.24 | 3.6 | 8.5 | 9.1 | 800 | 2030 | 3350 | 9.3 | 8.9 | 8.5 |
| | | 20 + 25 + 25 + 35 | 1.64 | 2.05 | 2.05 | 2.87 | 3.6 | 8.6 | 9.1 | 800 | 2050 | 3350 | 9.4 | 9.0 | 8.6 |
| | | 20 + 25 + 25 + 50 | 1.43 | 1.79 | 1.79 | 3.58 | 3.6 | 8.6 | 9.1 | 800 | 2050 | 3350 | 9.4 | 9.0 | 8.6 |
| | | 20 + 25 + 35 + 35 | 1.50 | 1.87 | 2.62 | 2.62 | 3.6 | 8.6 | 9.1 | 800 | 2050 | 3350 | 9.4 | 9.0 | 8.6 |
| | | 20 + 35 + 35 + 35 | 1.38 | 2.41 | 2.41 | 2.41 | 3.6 | 8.6 | 9.1 | 800 | 2050 | 3350 | 9.4 | 9.0 | 8.6 |
| | | 25 + 25 + 25 + 25 | 2.13 | 2.13 | 2.13 | 2.13 | 3.6 | 8.5 | 9.1 | 800 | 2030 | 3350 | 9.3 | 8.9 | 8.5 |
| | | 25 + 25 + 25 + 35 | 1.95 | 1.95 | 1.95 | 2.74 | 3.6 | 8.6 | 9.1 | 800 | 2050 | 3350 | 9.4 | 9.0 | 8.6 |
| | | 25 + 25 + 25 + 50 | 1.72 | 1.72 | 1.72 | 3.44 | 3.6 | 8.6 | 9.1 | 800 | 2050 | 3350 | 9.4 | 9.0 | 8.6 |
| | | 25 + 25 + 35 + 35 | 1.79 | 1.79 | 2.51 | 2.51 | 3.6 | 8.6 | 9.1 | 800 | 2050 | 3350 | 9.4 | 9.0 | 8.6 |

| Indoor unit combination | | | Cooling capacity (kW) | | | | | | | Power consumption(W) | | | Standard current(A) | | |
|---|---|---|---|---|---|---|---|---|---|---|---|---|---|---|---|
| | | | Room cooling capacity | | | | Total capacity | | | Min. | Standard | Max. | 220V | 230V | 240V |
| | | | A | B | C | D | Min. | Standard | Max. | | | | | | |
| Cooling operation | 1 room | 20 | 2.0 | - | - | - | 1.8 | 2.0 | 2.7 | 480 | 530 | 950 | 2.4 | 2.3 | 2.2 |
| | | 25 | 2.5 | - | - | - | 1.8 | 2.5 | 3.2 | 480 | 730 | 1080 | 3.4 | 3.2 | 3.1 |
| | | 35 | 3.5 | - | - | - | 1.8 | 3.5 | 3.7 | 480 | 1120 | 1240 | 5.1 | 4.9 | 4.7 |
| | | 50 | 5.0 | - | - | - | 1.8 | 5.0 | 5.8 | 480 | 1710 | 2100 | 7.9 | 7.5 | 7.2 |
| | | 60 | 6.0 | - | - | - | 1.8 | 6.0 | 6.7 | 480 | 2140 | 2700 | 9.8 | 9.4 | 9.0 |
| | 2 room | 20 + 20 | 2.00 | 2.00 | - | - | 3.0 | 4.0 | 5.8 | 550 | 930 | 1910 | 4.3 | 4.1 | 3.9 |
| | | 20 + 25 | 2.00 | 2.50 | - | - | 3.0 | 4.5 | 6.1 | 550 | 1170 | 2060 | 5.4 | 5.1 | 4.9 |
| | | 20 + 35 | 2.00 | 3.50 | - | - | 3.0 | 5.5 | 6.6 | 550 | 1590 | 2320 | 7.3 | 7.0 | 6.7 |
| | | 20 + 50 | 1.94 | 4.86 | - | - | 3.0 | 6.8 | 7.3 | 550 | 2150 | 2750 | 9.9 | 9.4 | 9.0 |
| | | 20 + 60 | 1.70 | 5.10 | - | - | 3.0 | 6.8 | 7.3 | 550 | 2150 | 2750 | 9.9 | 9.4 | 9.0 |
| | | 25 + 25 | 2.50 | 2.50 | - | - | 3.0 | 5.0 | 6.5 | 550 | 1360 | 2270 | 6.2 | 6.0 | 5.7 |
| | | 25 + 35 | 2.46 | 3.44 | - | - | 3.0 | 5.9 | 6.8 | 550 | 1780 | 2470 | 8.2 | 7.8 | 7.5 |
| | | 25 + 50 | 2.27 | 4.53 | - | - | 3.0 | 6.8 | 7.3 | 550 | 2150 | 2750 | 9.9 | 9.4 | 9.0 |
| | | 25 + 60 | 2.00 | 4.80 | - | - | 3.0 | 6.8 | 7.3 | 550 | 2150 | 2750 | 9.9 | 9.4 | 9.0 |
| | | 35 + 35 | 3.40 | 3.40 | - | - | 3.0 | 6.8 | 7.2 | 550 | 2150 | 2680 | 9.9 | 9.4 | 9.0 |
| | | 35 + 50 | 2.80 | 4.00 | - | - | 3.0 | 6.8 | 7.3 | 550 | 2150 | 2750 | 9.9 | 9.4 | 9.0 |
| | | 35 + 60 | 2.51 | 4.29 | - | - | 3.0 | 6.8 | 7.3 | 550 | 2150 | 2750 | 9.9 | 9.4 | 9.0 |
| | | 50 + 50 | 3.40 | 3.40 | - | - | 3.0 | 6.8 | 7.3 | 550 | 2150 | 2750 | 9.9 | 9.4 | 9.0 |
| | | 50 + 60 | 3.09 | 3.71 | - | - | 3.0 | 6.8 | 7.3 | 550 | 2150 | 2750 | 9.9 | 9.4 | 9.0 |
| | | 60 + 60 | 3.40 | 3.40 | - | - | 3.0 | 6.8 | 7.3 | 550 | 2150 | 2750 | 9.9 | 9.4 | 9.0 |
| | 3 room | 20 + 20 + 20 | 2.00 | 2.00 | 2.00 | - | 3.7 | 6.0 | 7.8 | 670 | 1450 | 2750 | 6.7 | 6.4 | 6.1 |
| | | 20 + 20 + 25 | 2.00 | 2.00 | 2.50 | - | 3.7 | 6.5 | 7.8 | 670 | 1630 | 2750 | 7.5 | 7.2 | 6.9 |
| | | 20 + 20 + 35 | 1.84 | 1.84 | 3.22 | - | 3.7 | 6.9 | 7.8 | 670 | 1910 | 2750 | 8.8 | 8.4 | 8.0 |
| | | 20 + 20 + 50 | 1.53 | 1.53 | 3.83 | - | 3.7 | 6.9 | 7.8 | 670 | 1910 | 2750 | 8.8 | 8.4 | 8.0 |
| | | 20 + 20 + 60 | 1.38 | 1.38 | 4.14 | - | 3.7 | 6.9 | 7.8 | 670 | 1910 | 2750 | 8.8 | 8.4 | 8.0 |
| | | 20 + 25 + 25 | 1.94 | 2.43 | 2.43 | - | 3.7 | 6.8 | 7.8 | 670 | 1820 | 2750 | 8.4 | 8.0 | 7.7 |
| | | 20 + 25 + 35 | 1.73 | 2.16 | 3.02 | - | 3.7 | 6.9 | 7.8 | 670 | 1910 | 2750 | 8.8 | 8.4 | 8.0 |

R410A

# MULTI-SPLIT SYSTEM

| Indoor unit combination | | | Cooling capacity (kW) | | | | | | | Power consumption(W) | | | Standard current(A) | | |
|---|---|---|---|---|---|---|---|---|---|---|---|---|---|---|---|
| | | | Room cooling capacity | | | | Total capacity | | | | | | | | |
| | | | A | B | C | D | Min. | Standard | Max. | Min. | Standard | Max. | 220V | 230V | 240V |
| Cooling operation | 3 room | 20 + 25 + 50 | 1.45 | 1.82 | 3.63 | - | 3.7 | 6.9 | 7.8 | 670 | 1910 | 2750 | 8.8 | 8.4 | 8.0 |
| | | 20 + 25 + 60 | 1.31 | 1.64 | 3.94 | - | 3.7 | 6.9 | 7.8 | 670 | 1910 | 2750 | 8.8 | 8.4 | 8.0 |
| | | 20 + 35 + 35 | 1.53 | 2.68 | 2.68 | - | 3.7 | 6.9 | 7.8 | 670 | 1910 | 2750 | 8.8 | 8.4 | 8.0 |
| | | 20 + 35 + 50 | 1.31 | 2.30 | 3.29 | - | 3.7 | 6.9 | 7.8 | 670 | 1910 | 2750 | 8.8 | 8.4 | 8.0 |
| | | 20 + 35 + 60 | 1.20 | 2.10 | 3.60 | - | 3.7 | 6.9 | 7.8 | 670 | 1910 | 2750 | 8.8 | 8.4 | 8.0 |
| | | 20 + 50 + 50 | 1.15 | 2.88 | 2.88 | - | 3.7 | 6.9 | 7.8 | 670 | 1910 | 2750 | 8.8 | 8.4 | 8.0 |
| | | 25 + 25 + 25 | 2.30 | 2.30 | 2.30 | - | 3.7 | 6.9 | 7.8 | 670 | 1910 | 2750 | 8.8 | 8.4 | 8.0 |
| | | 25 + 25 + 35 | 2.03 | 2.03 | 2.84 | - | 3.7 | 6.9 | 7.8 | 670 | 1910 | 2750 | 8.8 | 8.4 | 8.0 |
| | | 25 + 25 + 50 | 1.73 | 1.73 | 3.45 | - | 3.7 | 6.9 | 7.8 | 670 | 1910 | 2750 | 8.8 | 8.4 | 8.0 |
| | | 25 + 25 + 60 | 1.57 | 1.57 | 3.76 | - | 3.7 | 6.9 | 7.8 | 670 | 1910 | 2750 | 8.8 | 8.4 | 8.0 |
| | | 25 + 35 + 35 | 1.82 | 2.54 | 2.54 | - | 3.7 | 6.9 | 7.8 | 670 | 1910 | 2750 | 8.8 | 8.4 | 8.0 |
| | | 25 + 35 + 50 | 1.57 | 2.20 | 3.14 | - | 3.7 | 6.9 | 7.8 | 670 | 1910 | 2750 | 8.8 | 8.4 | 8.0 |
| | | 25 + 35 + 60 | 1.44 | 2.01 | 3.45 | - | 3.7 | 6.9 | 7.8 | 670 | 1910 | 2750 | 8.8 | 8.4 | 8.0 |
| | | 25 + 50 + 50 | 1.38 | 2.76 | 2.76 | - | 3.7 | 6.9 | 7.8 | 670 | 1910 | 2750 | 8.8 | 8.4 | 8.0 |
| | | 35 + 35 + 35 | 2.30 | 2.30 | 2.30 | - | 3.7 | 6.9 | 7.8 | 670 | 1910 | 2750 | 8.8 | 8.4 | 8.0 |
| | | 35 + 35 + 50 | 2.01 | 2.01 | 2.88 | - | 3.7 | 6.9 | 7.8 | 670 | 1910 | 2750 | 8.8 | 8.4 | 8.0 |
| | 4 room | 20 + 20 + 20 + 20 | 1.73 | 1.73 | 1.73 | 1.73 | 4.4 | 6.9 | 8.3 | 890 | 1750 | 2750 | 8.0 | 7.7 | 7.4 |
| | | 20 + 20 + 20 + 25 | 1.62 | 1.62 | 1.62 | 2.03 | 4.4 | 6.9 | 8.3 | 890 | 1750 | 2750 | 8.0 | 7.7 | 7.4 |
| | | 20 + 20 + 20 + 35 | 1.49 | 1.49 | 1.49 | 2.62 | 4.4 | 7.1 | 8.3 | 890 | 1790 | 2750 | 8.2 | 7.9 | 7.5 |
| | | 20 + 20 + 20 + 50 | 1.29 | 1.29 | 1.29 | 3.23 | 4.4 | 7.1 | 8.3 | 890 | 1790 | 2750 | 8.2 | 7.9 | 7.5 |
| | | 20 + 20 + 20 + 60 | 1.18 | 1.18 | 1.18 | 3.55 | 4.4 | 7.1 | 8.3 | 890 | 1790 | 2750 | 8.2 | 7.9 | 7.5 |
| | | 20 + 20 + 25 + 25 | 1.53 | 1.53 | 1.92 | 1.92 | 4.4 | 6.9 | 8.3 | 890 | 1750 | 2750 | 8.0 | 7.7 | 7.4 |
| | | 20 + 20 + 25 + 35 | 1.42 | 1.42 | 1.78 | 2.49 | 4.4 | 7.1 | 8.3 | 890 | 1790 | 2750 | 8.2 | 7.9 | 7.5 |
| | | 20 + 20 + 25 + 50 | 1.23 | 1.23 | 1.54 | 3.09 | 4.4 | 7.1 | 8.3 | 890 | 1790 | 2750 | 8.2 | 7.9 | 7.5 |
| | | 20 + 20 + 25 + 60 | 1.14 | 1.14 | 1.42 | 3.41 | 4.4 | 7.1 | 8.3 | 890 | 1790 | 2750 | 8.2 | 7.9 | 7.5 |
| | | 20 + 20 + 35 + 35 | 1.29 | 1.29 | 2.26 | 2.26 | 4.4 | 7.1 | 8.3 | 890 | 1790 | 2750 | 8.2 | 7.9 | 7.5 |
| | | 20 + 20 + 35 + 50 | 1.14 | 1.14 | 1.99 | 2.84 | 4.4 | 7.1 | 8.3 | 890 | 1790 | 2750 | 8.2 | 7.9 | 7.5 |
| | | 20 + 25 + 25 + 25 | 1.49 | 1.87 | 1.87 | 1.87 | 4.4 | 7.1 | 8.3 | 890 | 1790 | 2750 | 8.2 | 7.9 | 7.5 |
| | | 20 + 25 + 25 + 35 | 1.35 | 1.69 | 1.69 | 2.37 | 4.4 | 7.1 | 8.3 | 890 | 1790 | 2750 | 8.2 | 7.9 | 7.5 |
| | | 20 + 25 + 25 + 50 | 1.18 | 1.48 | 1.48 | 2.96 | 4.4 | 7.1 | 8.3 | 890 | 1790 | 2750 | 8.2 | 7.9 | 7.5 |
| | | 20 + 25 + 35 + 35 | 1.23 | 1.54 | 2.16 | 2.16 | 4.4 | 7.1 | 8.3 | 890 | 1790 | 2750 | 8.2 | 7.9 | 7.5 |
| | | 20 + 35 + 35 + 35 | 1.14 | 1.99 | 1.99 | 1.99 | 4.4 | 7.1 | 8.3 | 890 | 1790 | 2750 | 8.2 | 7.9 | 7.5 |
| | | 25 + 25 + 25 + 25 | 1.78 | 1.78 | 1.78 | 1.78 | 4.4 | 7.1 | 8.3 | 890 | 1790 | 2750 | 8.2 | 7.9 | 7.5 |
| | | 25 + 25 + 25 + 35 | 1.61 | 1.61 | 1.61 | 2.26 | 4.4 | 7.1 | 8.3 | 890 | 1790 | 2750 | 8.2 | 7.9 | 7.5 |
| | | 25 + 25 + 25 + 50 | 1.42 | 1.42 | 1.42 | 2.84 | 4.4 | 7.1 | 8.3 | 890 | 1790 | 2750 | 8.2 | 7.9 | 7.5 |
| | | 25 + 25 + 35 + 35 | 1.48 | 1.48 | 2.07 | 2.07 | 4.4 | 7.1 | 8.3 | 890 | 1790 | 2750 | 8.2 | 7.9 | 7.5 |

## SCM80ZM-S1 Table of Indoor unit combination only with SRK-ZSX type

| Indoor unit combination | | | Heating capacity (kW) | | | | | | | Power consumption(W) | | | Standard current(A) | | |
|---|---|---|---|---|---|---|---|---|---|---|---|---|---|---|---|
| | | | Room heating capacity | | | | Total capacity | | | | | | | | |
| | | | A | B | C | D | Min. | Standard | Max. | Min. | Standard | Max. | 220V | 230V | 240V |
| Heating operation | 1 room | 20 | 3.0 | - | - | - | 1.5 | 3.0 | 3.7 | 600 | 840 | 1330 | 3.9 | 3.7 | 3.5 |
| | | 25 | 3.4 | - | - | - | 1.5 | 3.4 | 4.2 | 600 | 1000 | 1510 | 4.6 | 4.4 | 4.2 |
| | | 35 | 4.5 | - | - | - | 1.5 | 4.5 | 5.0 | 600 | 1330 | 1790 | 6.1 | 5.8 | 5.6 |
| | | 50 | 5.8 | - | - | - | 1.5 | 5.8 | 6.5 | 600 | 1780 | 2310 | 8.2 | 7.8 | 7.5 |
| | | 60 | 6.8 | - | - | - | 1.5 | 6.8 | 7.5 | 600 | 2100 | 2660 | 9.6 | 9.2 | 8.8 |
| | 2 room | 20 + 20 | 2.70 | 2.70 | - | - | 2.1 | 5.4 | 7.4 | 630 | 1340 | 1870 | 6.2 | 5.9 | 5.6 |
| | | 20 + 25 | 2.62 | 3.28 | - | - | 2.1 | 5.9 | 7.7 | 630 | 1530 | 2130 | 7.0 | 6.7 | 6.4 |
| | | 20 + 35 | 2.51 | 4.39 | - | - | 2.1 | 6.9 | 8.3 | 630 | 1910 | 2650 | 8.8 | 8.4 | 8.0 |
| | | 20 + 50 | 2.37 | 5.93 | - | - | 2.1 | 8.3 | 8.8 | 630 | 2460 | 3430 | 11.3 | 10.8 | 10.4 |
| | | 20 + 60 | 2.08 | 6.23 | - | - | 2.1 | 8.3 | 8.8 | 630 | 2460 | 3430 | 11.3 | 10.8 | 10.4 |
| | | 25 + 25 | 3.20 | 3.20 | - | - | 2.1 | 6.4 | 8.1 | 630 | 1700 | 2480 | 7.8 | 7.5 | 7.2 |
| | | 25 + 35 | 3.08 | 4.32 | - | - | 2.1 | 7.4 | 8.6 | 630 | 2090 | 2910 | 9.6 | 9.2 | 8.8 |
| | | 25 + 50 | 2.77 | 5.53 | - | - | 2.1 | 8.3 | 8.8 | 630 | 2460 | 3430 | 11.3 | 10.8 | 10.4 |
| | | 25 + 60 | 2.44 | 5.86 | - | - | 2.1 | 8.3 | 8.8 | 630 | 2460 | 3430 | 11.3 | 10.8 | 10.4 |
| | | 35 + 35 | 4.15 | 4.15 | - | - | 2.1 | 8.3 | 8.8 | 630 | 2460 | 3430 | 11.3 | 10.8 | 10.4 |
| | | 35 + 50 | 3.42 | 4.88 | - | - | 2.1 | 8.3 | 8.8 | 630 | 2460 | 3430 | 11.3 | 10.8 | 10.4 |
| | | 35 + 60 | 3.06 | 5.24 | - | - | 2.1 | 8.3 | 8.8 | 630 | 2460 | 3430 | 11.3 | 10.8 | 10.4 |
| | | 50 + 50 | 4.15 | 4.15 | - | - | 2.1 | 8.3 | 8.8 | 630 | 2460 | 3430 | 11.3 | 10.8 | 10.4 |
| | | 50 + 60 | 3.77 | 4.53 | - | - | 2.1 | 8.3 | 8.8 | 630 | 2460 | 3430 | 11.3 | 10.8 | 10.4 |
| | | 60 + 60 | 4.15 | 4.15 | - | - | 2.1 | 8.3 | 8.8 | 630 | 2460 | 3430 | 11.3 | 10.8 | 10.4 |
| | 3 room | 20 + 20 + 20 | 2.57 | 2.57 | 2.57 | - | 3.2 | 7.7 | 9.3 | 660 | 1830 | 3430 | 8.4 | 8.0 | 7.7 |
| | | 20 + 20 + 25 | 2.46 | 2.46 | 3.08 | - | 3.2 | 8.0 | 9.3 | 660 | 1930 | 3430 | 8.9 | 8.5 | 8.1 |
| | | 20 + 20 + 35 | 2.27 | 2.27 | 3.97 | - | 3.2 | 8.5 | 9.3 | 660 | 2090 | 3430 | 9.6 | 9.2 | 8.8 |
| | | 20 + 20 + 50 | 2.00 | 2.00 | 5.00 | - | 3.2 | 9.0 | 9.3 | 660 | 2250 | 3430 | 10.3 | 9.9 | 9.5 |
| | | 20 + 20 + 60 | 1.80 | 1.80 | 5.40 | - | 3.2 | 9.0 | 9.3 | 660 | 2250 | 3430 | 10.3 | 9.9 | 9.5 |
| | | 20 + 25 + 25 | 2.34 | 2.93 | 2.93 | - | 3.2 | 8.2 | 9.3 | 660 | 1990 | 3430 | 9.1 | 8.7 | 8.4 |
| | | 20 + 25 + 35 | 2.20 | 2.75 | 3.85 | - | 3.2 | 8.8 | 9.3 | 660 | 2180 | 3430 | 10.0 | 9.6 | 9.2 |
| | | 20 + 25 + 50 | 1.89 | 2.37 | 4.74 | - | 3.2 | 9.0 | 9.3 | 660 | 2250 | 3430 | 10.3 | 9.9 | 9.5 |
| | | 20 + 25 + 60 | 1.71 | 2.14 | 5.14 | - | 3.2 | 9.0 | 9.3 | 660 | 2250 | 3430 | 10.3 | 9.9 | 9.5 |
| | | 20 + 35 + 35 | 2.00 | 3.50 | 3.50 | - | 3.2 | 9.0 | 9.3 | 660 | 2250 | 3430 | 10.3 | 9.9 | 9.5 |
| | | 20 + 35 + 50 | 1.71 | 3.00 | 4.29 | - | 3.2 | 9.0 | 9.3 | 660 | 2250 | 3430 | 10.3 | 9.9 | 9.5 |
| | | 20 + 35 + 60 | 1.57 | 2.74 | 4.70 | - | 3.2 | 9.0 | 9.3 | 660 | 2250 | 3430 | 10.3 | 9.9 | 9.5 |
| | | 20 + 50 + 50 | 1.50 | 3.75 | 3.75 | - | 3.2 | 9.0 | 9.3 | 660 | 2250 | 3430 | 10.3 | 9.9 | 9.5 |
| | | 20 + 50 + 60 | 1.38 | 3.46 | 4.15 | - | 3.2 | 9.0 | 9.3 | 660 | 2250 | 3430 | 10.3 | 9.9 | 9.5 |

| Indoor unit combination | | | Heating capacity (kW) | | | | | | | Power consumption(W) | | | Standard current(A) | | |
|---|---|---|---|---|---|---|---|---|---|---|---|---|---|---|---|
| | | | Room heating capacity | | | | Total capacity | | | Min. | Standard | Max. | 220V | 230V | 240V |
| | | | A | B | C | D | Min. | Standard | Max. | | | | | | |
| Heating operation | 3 room | 25 + 25 + 25 | 2.83 | 2.83 | 2.83 | - | 3.2 | 8.5 | 9.3 | 660 | 2090 | 3430 | 9.6 | 9.2 | 8.8 |
| | | 25 + 25 + 35 | 2.65 | 2.65 | 3.71 | - | 3.2 | 9.0 | 9.3 | 660 | 2250 | 3430 | 10.3 | 9.9 | 9.5 |
| | | 25 + 25 + 50 | 2.25 | 2.25 | 4.50 | - | 3.2 | 9.0 | 9.3 | 660 | 2250 | 3430 | 10.3 | 9.9 | 9.5 |
| | | 25 + 25 + 60 | 2.05 | 2.05 | 4.91 | - | 3.2 | 9.0 | 9.3 | 660 | 2250 | 3430 | 10.3 | 9.9 | 9.5 |
| | | 25 + 35 + 35 | 2.37 | 3.32 | 3.32 | - | 3.2 | 9.0 | 9.3 | 660 | 2250 | 3430 | 10.3 | 9.9 | 9.5 |
| | | 25 + 35 + 50 | 2.05 | 2.86 | 4.09 | - | 3.2 | 9.0 | 9.3 | 660 | 2250 | 3430 | 10.3 | 9.9 | 9.5 |
| | | 25 + 35 + 60 | 1.88 | 2.63 | 4.50 | - | 3.2 | 9.0 | 9.3 | 660 | 2250 | 3430 | 10.3 | 9.9 | 9.5 |
| | | 25 + 50 + 50 | 1.80 | 3.60 | 3.60 | - | 3.2 | 9.0 | 9.3 | 660 | 2250 | 3430 | 10.3 | 9.9 | 9.5 |
| | | 25 + 50 + 60 | 1.67 | 3.33 | 4.00 | - | 3.2 | 9.0 | 9.3 | 660 | 2250 | 3430 | 10.3 | 9.9 | 9.5 |
| | | 35 + 35 + 35 | 3.00 | 3.00 | 3.00 | - | 3.2 | 9.0 | 9.3 | 660 | 2250 | 3430 | 10.3 | 9.9 | 9.5 |
| | | 35 + 35 + 50 | 2.63 | 2.63 | 3.75 | - | 3.2 | 9.0 | 9.3 | 660 | 2250 | 3430 | 10.3 | 9.9 | 9.5 |
| | | 35 + 35 + 60 | 2.42 | 2.42 | 4.15 | - | 3.2 | 9.0 | 9.3 | 660 | 2250 | 3430 | 10.3 | 9.9 | 9.5 |
| | | 35 + 50 + 50 | 2.33 | 3.33 | 3.33 | - | 3.2 | 9.0 | 9.3 | 660 | 2250 | 3430 | 10.3 | 9.9 | 9.5 |
| | 4 room | 20 + 20 + 20 + 20 | 2.28 | 2.28 | 2.28 | 2.28 | 3.6 | 9.1 | 9.8 | 800 | 2220 | 3430 | 10.2 | 9.7 | 9.3 |
| | | 20 + 20 + 20 + 25 | 2.14 | 2.14 | 2.14 | 2.68 | 3.6 | 9.1 | 9.8 | 800 | 2220 | 3430 | 10.2 | 9.7 | 9.3 |
| | | 20 + 20 + 20 + 35 | 1.94 | 1.94 | 1.94 | 3.39 | 3.6 | 9.2 | 9.8 | 800 | 2240 | 3430 | 10.3 | 9.8 | 9.4 |
| | | 20 + 20 + 20 + 50 | 1.67 | 1.67 | 1.67 | 4.18 | 3.6 | 9.2 | 9.8 | 800 | 2240 | 3430 | 10.3 | 9.8 | 9.4 |
| | | 20 + 20 + 20 + 60 | 1.55 | 1.55 | 1.55 | 4.65 | 3.6 | 9.3 | 9.8 | 800 | 2260 | 3430 | 10.4 | 10.0 | 9.5 |
| | | 20 + 20 + 25 + 25 | 2.04 | 2.04 | 2.56 | 2.56 | 3.6 | 9.2 | 9.8 | 800 | 2240 | 3430 | 10.3 | 9.8 | 9.4 |
| | | 20 + 20 + 25 + 35 | 1.84 | 1.84 | 2.30 | 3.22 | 3.6 | 9.2 | 9.8 | 800 | 2240 | 3430 | 10.3 | 9.8 | 9.4 |
| | | 20 + 20 + 25 + 50 | 1.62 | 1.62 | 2.02 | 4.04 | 3.6 | 9.3 | 9.8 | 800 | 2260 | 3430 | 10.4 | 10.0 | 9.5 |
| | | 20 + 20 + 25 + 60 | 1.49 | 1.49 | 1.86 | 4.46 | 3.6 | 9.3 | 9.8 | 800 | 2260 | 3430 | 10.4 | 10.0 | 9.5 |
| | | 20 + 20 + 35 + 35 | 1.67 | 1.67 | 2.93 | 2.93 | 3.6 | 9.2 | 9.8 | 800 | 2240 | 3430 | 10.3 | 9.8 | 9.4 |
| | | 20 + 20 + 35 + 50 | 1.49 | 1.49 | 2.60 | 3.72 | 3.6 | 9.3 | 9.8 | 800 | 2260 | 3430 | 10.4 | 10.0 | 9.5 |
| | | 20 + 20 + 35 + 60 | 1.38 | 1.38 | 2.41 | 4.13 | 3.6 | 9.3 | 9.8 | 800 | 2260 | 3430 | 10.4 | 10.0 | 9.5 |
| | | 20 + 25 + 25 + 25 | 1.94 | 2.42 | 2.42 | 2.42 | 3.6 | 9.2 | 9.8 | 800 | 2240 | 3430 | 10.3 | 9.8 | 9.4 |
| | | 20 + 25 + 25 + 35 | 1.75 | 2.19 | 2.19 | 3.07 | 3.6 | 9.2 | 9.8 | 800 | 2240 | 3430 | 10.3 | 9.8 | 9.4 |
| | | 20 + 25 + 25 + 50 | 1.55 | 1.94 | 1.94 | 3.88 | 3.6 | 9.3 | 9.8 | 800 | 2260 | 3430 | 10.4 | 10.0 | 9.5 |
| | | 20 + 25 + 25 + 60 | 1.43 | 1.79 | 1.79 | 4.29 | 3.6 | 9.3 | 9.8 | 800 | 2260 | 3430 | 10.4 | 10.0 | 9.5 |
| | | 20 + 25 + 35 + 35 | 1.62 | 2.02 | 2.83 | 2.83 | 3.6 | 9.3 | 9.8 | 800 | 2260 | 3430 | 10.4 | 10.0 | 9.5 |
| | | 20 + 25 + 35 + 50 | 1.43 | 1.79 | 2.50 | 3.58 | 3.6 | 9.3 | 9.8 | 800 | 2260 | 3430 | 10.4 | 10.0 | 9.5 |
| | | 20 + 35 + 35 + 35 | 1.49 | 2.60 | 2.60 | 2.60 | 3.6 | 9.3 | 9.8 | 800 | 2260 | 3430 | 10.4 | 10.0 | 9.5 |
| | | 25 + 25 + 25 + 25 | 2.30 | 2.30 | 2.30 | 2.30 | 3.6 | 9.2 | 9.8 | 800 | 2240 | 3430 | 10.3 | 9.8 | 9.4 |
| | | 25 + 25 + 25 + 35 | 2.09 | 2.09 | 2.09 | 2.93 | 3.6 | 9.2 | 9.8 | 800 | 2240 | 3430 | 10.3 | 9.8 | 9.4 |
| | | 25 + 25 + 25 + 50 | 1.86 | 1.86 | 1.86 | 3.72 | 3.6 | 9.3 | 9.8 | 800 | 2260 | 3430 | 10.4 | 10.0 | 9.5 |
| | | 25 + 25 + 25 + 60 | 1.72 | 1.72 | 1.72 | 4.13 | 3.6 | 9.3 | 9.8 | 800 | 2260 | 3430 | 10.4 | 10.0 | 9.5 |
| | | 25 + 25 + 35 + 35 | 1.94 | 1.94 | 2.71 | 2.71 | 3.6 | 9.3 | 9.8 | 800 | 2260 | 3430 | 10.4 | 10.0 | 9.5 |
| | | 25 + 25 + 35 + 50 | 1.72 | 1.72 | 2.41 | 3.44 | 3.6 | 9.3 | 9.8 | 800 | 2260 | 3430 | 10.4 | 10.0 | 9.5 |
| | | 25 + 35 + 35 + 35 | 1.79 | 2.50 | 2.50 | 2.50 | 3.6 | 9.3 | 9.8 | 800 | 2260 | 3430 | 10.4 | 10.0 | 9.5 |

| Indoor unit combination | | | Cooling capacity (kW) | | | | | | | Power consumption(W) | | | Standard current(A) | | |
|---|---|---|---|---|---|---|---|---|---|---|---|---|---|---|---|
| | | | Room cooling capacity | | | | Total capacity | | | Min. | Standard | Max. | 220V | 230V | 240V |
| | | | A | B | C | D | Min. | Standard | Max. | | | | | | |
| Cooling operation | 1 room | 20 | 2.0 | - | - | - | 1.8 | 2.0 | 2.8 | 480 | 500 | 950 | 2.3 | 2.2 | 2.1 |
| | | 25 | 2.5 | - | - | - | 1.8 | 2.5 | 3.4 | 480 | 680 | 1080 | 3.1 | 3.0 | 2.9 |
| | | 35 | 3.5 | - | - | - | 1.8 | 3.5 | 3.9 | 480 | 1010 | 1240 | 4.6 | 4.4 | 4.3 |
| | | 50 | 5.0 | - | - | - | 1.8 | 5.0 | 6.1 | 480 | 1530 | 2100 | 7.0 | 6.7 | 6.4 |
| | | 60 | 6.0 | - | - | - | 1.8 | 6.0 | 7.0 | 480 | 1880 | 2700 | 8.6 | 8.3 | 7.9 |
| | 2 room | 20 + 20 | 2.00 | 2.00 | - | - | 3.0 | 4.0 | 6.1 | 550 | 830 | 1910 | 3.8 | 3.6 | 3.5 |
| | | 20 + 25 | 2.00 | 2.50 | - | - | 3.0 | 4.5 | 6.4 | 550 | 1030 | 2060 | 4.7 | 4.5 | 4.3 |
| | | 20 + 35 | 2.00 | 3.50 | - | - | 3.0 | 5.5 | 6.9 | 550 | 1390 | 2320 | 6.4 | 6.1 | 5.9 |
| | | 20 + 50 | 1.97 | 4.93 | - | - | 3.0 | 6.9 | 7.9 | 550 | 1910 | 2830 | 8.8 | 8.4 | 8.0 |
| | | 20 + 60 | 1.85 | 5.55 | - | - | 3.0 | 7.4 | 7.9 | 550 | 2090 | 2830 | 9.6 | 9.2 | 8.8 |
| | | 25 + 25 | 2.50 | 2.50 | - | - | 3.0 | 5.0 | 6.8 | 550 | 1190 | 2270 | 5.5 | 5.2 | 5.0 |
| | | 25 + 35 | 2.46 | 3.44 | - | - | 3.0 | 5.9 | 7.2 | 550 | 1560 | 2470 | 7.2 | 6.9 | 6.6 |
| | | 25 + 50 | 2.47 | 4.93 | - | - | 3.0 | 7.4 | 7.9 | 550 | 2090 | 2830 | 9.6 | 9.2 | 8.8 |
| | | 25 + 60 | 2.18 | 5.22 | - | - | 3.0 | 7.4 | 7.9 | 550 | 2090 | 2830 | 9.6 | 9.2 | 8.8 |
| | | 35 + 35 | 3.45 | 3.45 | - | - | 3.0 | 6.9 | 7.6 | 550 | 1910 | 2680 | 8.8 | 8.4 | 8.0 |
| | | 35 + 50 | 3.05 | 4.35 | - | - | 3.0 | 7.4 | 7.9 | 550 | 2090 | 2830 | 9.6 | 9.2 | 8.8 |
| | | 35 + 60 | 2.73 | 4.67 | - | - | 3.0 | 7.4 | 7.9 | 550 | 2090 | 2830 | 9.6 | 9.2 | 8.8 |
| | | 50 + 50 | 3.70 | 3.70 | - | - | 3.0 | 7.4 | 7.9 | 550 | 2090 | 2830 | 9.6 | 9.2 | 8.8 |
| | | 50 + 60 | 3.36 | 4.04 | - | - | 3.0 | 7.4 | 7.9 | 550 | 2090 | 2830 | 9.6 | 9.2 | 8.8 |
| | | 60 + 60 | 3.70 | 3.70 | - | - | 3.0 | 7.4 | 7.9 | 550 | 2090 | 2830 | 9.6 | 9.2 | 8.8 |
| | 3 room | 20 + 20 + 20 | 2.00 | 2.00 | 2.00 | - | 3.7 | 6.0 | 8.5 | 670 | 1300 | 2830 | 6.0 | 5.7 | 5.5 |
| | | 20 + 20 + 25 | 2.00 | 2.00 | 2.50 | - | 3.7 | 6.5 | 8.5 | 670 | 1450 | 2830 | 6.7 | 6.4 | 6.1 |
| | | 20 + 20 + 35 | 1.89 | 1.89 | 3.31 | - | 3.7 | 7.1 | 8.5 | 670 | 1730 | 2830 | 7.9 | 7.6 | 7.3 |
| | | 20 + 20 + 50 | 1.73 | 1.73 | 4.33 | - | 3.7 | 7.8 | 8.5 | 670 | 2030 | 2830 | 9.3 | 8.9 | 8.5 |
| | | 20 + 20 + 60 | 1.56 | 1.56 | 4.68 | - | 3.7 | 7.8 | 8.5 | 670 | 2030 | 2830 | 9.3 | 8.9 | 8.5 |
| | | 20 + 25 + 25 | 1.94 | 2.43 | 2.43 | - | 3.7 | 6.8 | 8.5 | 670 | 1610 | 2830 | 7.4 | 7.1 | 6.8 |
| | | 20 + 25 + 35 | 1.88 | 2.34 | 3.28 | - | 3.7 | 7.5 | 8.5 | 670 | 1870 | 2830 | 8.6 | 8.2 | 7.9 |
| | | 20 + 25 + 50 | 1.64 | 2.05 | 4.11 | - | 3.7 | 7.8 | 8.5 | 670 | 2030 | 2830 | 9.3 | 8.9 | 8.5 |
| | | 20 + 25 + 60 | 1.49 | 1.86 | 4.46 | - | 3.7 | 7.8 | 8.5 | 670 | 2030 | 2830 | 9.3 | 8.9 | 8.5 |
| | | 20 + 35 + 35 | 1.73 | 3.03 | 3.03 | - | 3.7 | 7.8 | 8.5 | 670 | 2030 | 2830 | 9.3 | 8.9 | 8.5 |
| | | 20 + 35 + 50 | 1.49 | 2.60 | 3.71 | - | 3.7 | 7.8 | 8.5 | 670 | 2030 | 2830 | 9.3 | 8.9 | 8.5 |
| | | 20 + 35 + 60 | 1.36 | 2.37 | 4.07 | - | 3.7 | 7.8 | 8.5 | 670 | 2030 | 2830 | 9.3 | 8.9 | 8.5 |
| | | 20 + 50 + 50 | 1.30 | 3.25 | 3.25 | - | 3.7 | 7.8 | 8.5 | 670 | 2030 | 2830 | 9.3 | 8.9 | 8.5 |
| | | 20 + 50 + 60 | 1.20 | 3.00 | 3.60 | - | 3.7 | 7.8 | 8.5 | 670 | 2030 | 2830 | 9.3 | 8.9 | 8.5 |

R410A

# MULTI-SPLIT SYSTEM

| Indoor unit combination | | | Cooling capacity (kW) | | | | | | | Power consumption(W) | | | Standard current(A) | | |
|---|---|---|---|---|---|---|---|---|---|---|---|---|---|---|---|
| | | | Room cooling capacity | | | | Total capacity | | | Min. | Standard | Max. | 220V | 230V | 240V |
| | | | A | B | C | D | Min. | Standard | Max. | | | | | | |
| Cooling operation | 3 room | 25 + 25 + 25 | 2.37 | 2.37 | 2.37 | - | 3.7 | 7.1 | 8.5 | 670 | 1730 | 2830 | 7.9 | 7.6 | 7.3 |
| | | 25 + 25 + 35 | 2.29 | 2.29 | 3.21 | - | 3.7 | 7.8 | 8.5 | 670 | 2030 | 2830 | 9.3 | 8.9 | 8.5 |
| | | 25 + 25 + 50 | 1.95 | 1.95 | 3.90 | - | 3.7 | 7.8 | 8.5 | 670 | 2030 | 2830 | 9.3 | 8.9 | 8.5 |
| | | 25 + 25 + 60 | 1.77 | 1.77 | 4.25 | - | 3.7 | 7.8 | 8.5 | 670 | 2030 | 2830 | 9.3 | 8.9 | 8.5 |
| | | 25 + 35 + 35 | 2.05 | 2.87 | 2.87 | - | 3.7 | 7.8 | 8.5 | 670 | 2030 | 2830 | 9.3 | 8.9 | 8.5 |
| | | 25 + 35 + 50 | 1.77 | 2.48 | 3.55 | - | 3.7 | 7.8 | 8.5 | 670 | 2030 | 2830 | 9.3 | 8.9 | 8.5 |
| | | 25 + 35 + 60 | 1.63 | 2.28 | 3.90 | - | 3.7 | 7.8 | 8.5 | 670 | 2030 | 2830 | 9.3 | 8.9 | 8.5 |
| | | 25 + 50 + 50 | 1.56 | 3.12 | 3.12 | - | 3.7 | 7.8 | 8.5 | 670 | 2030 | 2830 | 9.3 | 8.9 | 8.5 |
| | | 25 + 50 + 60 | 1.44 | 2.89 | 3.47 | - | 3.7 | 7.8 | 8.5 | 670 | 2030 | 2830 | 9.3 | 8.9 | 8.5 |
| | | 35 + 35 + 35 | 2.60 | 2.60 | 2.60 | - | 3.7 | 7.8 | 8.5 | 670 | 2030 | 2830 | 9.3 | 8.9 | 8.5 |
| | | 35 + 35 + 50 | 2.28 | 2.28 | 3.25 | - | 3.7 | 7.8 | 8.5 | 670 | 2030 | 2830 | 9.3 | 8.9 | 8.5 |
| | | 35 + 35 + 60 | 2.10 | 2.10 | 3.60 | - | 3.7 | 7.8 | 8.5 | 670 | 2030 | 2830 | 9.3 | 8.9 | 8.5 |
| | | 35 + 50 + 50 | 2.02 | 2.89 | 2.89 | - | 3.7 | 7.8 | 8.5 | 670 | 2030 | 2830 | 9.3 | 8.9 | 8.5 |
| | 4 room | 20 + 20 + 20 + 20 | 1.95 | 1.95 | 1.95 | 1.95 | 4.4 | 7.8 | 9.2 | 890 | 1920 | 2830 | 8.8 | 8.4 | 8.1 |
| | | 20 + 20 + 20 + 25 | 1.84 | 1.84 | 1.84 | 2.29 | 4.4 | 7.8 | 9.2 | 890 | 1920 | 2830 | 8.8 | 8.4 | 8.1 |
| | | 20 + 20 + 20 + 35 | 1.66 | 1.66 | 1.66 | 2.91 | 4.4 | 7.9 | 9.2 | 890 | 1940 | 2830 | 8.9 | 8.5 | 8.2 |
| | | 20 + 20 + 20 + 50 | 1.44 | 1.44 | 1.44 | 3.59 | 4.4 | 7.9 | 9.2 | 890 | 1940 | 2830 | 8.9 | 8.5 | 8.2 |
| | | 20 + 20 + 20 + 60 | 1.33 | 1.33 | 1.33 | 4.00 | 4.4 | 8.0 | 9.2 | 890 | 1950 | 2830 | 9.9 | 8.6 | 9.0 |
| | | 20 + 20 + 25 + 25 | 1.76 | 1.76 | 2.19 | 2.19 | 4.4 | 7.9 | 9.2 | 890 | 1940 | 2830 | 8.9 | 8.5 | 8.2 |
| | | 20 + 20 + 25 + 35 | 1.58 | 1.58 | 1.98 | 2.77 | 4.4 | 7.9 | 9.2 | 890 | 1940 | 2830 | 8.9 | 8.5 | 8.2 |
| | | 20 + 20 + 25 + 50 | 1.37 | 1.37 | 1.72 | 3.43 | 4.4 | 7.9 | 9.2 | 890 | 1940 | 2830 | 8.9 | 8.5 | 8.2 |
| | | 20 + 20 + 25 + 60 | 1.28 | 1.28 | 1.60 | 3.84 | 4.4 | 8.0 | 9.2 | 890 | 1950 | 2830 | 9.9 | 8.6 | 9.0 |
| | | 20 + 20 + 35 + 35 | 1.44 | 1.44 | 2.51 | 2.51 | 4.4 | 7.9 | 9.2 | 890 | 1940 | 2830 | 8.9 | 8.5 | 8.2 |
| | | 20 + 20 + 35 + 50 | 1.28 | 1.28 | 2.24 | 3.20 | 4.4 | 8.0 | 9.2 | 890 | 1950 | 2830 | 9.9 | 8.6 | 9.0 |
| | | 20 + 20 + 35 + 60 | 1.19 | 1.19 | 2.07 | 3.56 | 4.4 | 8.0 | 9.2 | 890 | 1950 | 2830 | 9.9 | 8.6 | 9.0 |
| | | 20 + 25 + 25 + 25 | 1.66 | 2.08 | 2.08 | 2.08 | 4.4 | 7.9 | 9.2 | 890 | 1940 | 2830 | 8.9 | 8.5 | 8.2 |
| | | 20 + 25 + 25 + 35 | 1.50 | 1.88 | 1.88 | 2.63 | 4.4 | 7.9 | 9.2 | 890 | 1940 | 2830 | 8.9 | 8.5 | 8.2 |
| | | 20 + 25 + 25 + 50 | 1.33 | 1.67 | 1.67 | 3.33 | 4.4 | 8.0 | 9.2 | 890 | 1950 | 2830 | 9.9 | 8.6 | 9.0 |
| | | 20 + 25 + 25 + 60 | 1.23 | 1.54 | 1.54 | 3.69 | 4.4 | 8.0 | 9.2 | 890 | 1950 | 2830 | 9.9 | 8.6 | 9.0 |
| | | 20 + 25 + 35 + 35 | 1.37 | 1.72 | 2.40 | 2.40 | 4.4 | 7.9 | 9.2 | 890 | 1940 | 2830 | 8.9 | 8.5 | 8.2 |
| | | 20 + 25 + 35 + 50 | 1.23 | 1.54 | 2.15 | 3.08 | 4.4 | 8.0 | 9.2 | 890 | 1950 | 2830 | 9.9 | 8.6 | 9.0 |
| | | 20 + 35 + 35 + 35 | 1.28 | 2.24 | 2.24 | 2.24 | 4.4 | 8.0 | 9.2 | 890 | 1950 | 2830 | 9.9 | 8.6 | 9.0 |
| | | 25 + 25 + 25 + 25 | 1.98 | 1.98 | 1.98 | 1.98 | 4.4 | 7.9 | 9.2 | 890 | 1940 | 2830 | 8.9 | 8.5 | 8.2 |
| | | 25 + 25 + 25 + 35 | 1.80 | 1.80 | 1.80 | 2.51 | 4.4 | 7.9 | 9.2 | 890 | 1940 | 2830 | 8.9 | 8.5 | 8.2 |
| | | 25 + 25 + 25 + 50 | 1.60 | 1.60 | 1.60 | 3.20 | 4.4 | 8.0 | 9.2 | 890 | 1950 | 2830 | 9.9 | 8.6 | 9.0 |
| | | 25 + 25 + 25 + 60 | 1.48 | 1.48 | 1.48 | 3.56 | 4.4 | 8.0 | 9.2 | 890 | 1950 | 2830 | 9.9 | 8.6 | 9.0 |
| | | 25 + 25 + 35 + 35 | 1.67 | 1.67 | 2.33 | 2.33 | 4.4 | 8.0 | 9.2 | 890 | 1950 | 2830 | 9.9 | 8.6 | 9.0 |
| | | 25 + 25 + 35 + 50 | 1.48 | 1.48 | 2.07 | 2.96 | 4.4 | 8.0 | 9.2 | 890 | 1950 | 2830 | 9.9 | 8.6 | 9.0 |
| | | 25 + 35 + 35 + 35 | 1.54 | 2.15 | 2.15 | 2.15 | 4.4 | 8.0 | 9.2 | 890 | 1950 | 2830 | 9.9 | 8.6 | 9.0 |

## SCM80ZM-S1 Table of Indoor unit combination with other indoor unit

| Indoor unit combination | | | Heating capacity (kW) | | | | | | | Power consumption(W) | | | Standard current(A) | | |
|---|---|---|---|---|---|---|---|---|---|---|---|---|---|---|---|
| | | | Room heating capacity | | | | Total capacity | | | Min. | Standard | Max. | 220V | 230V | 240V |
| | | | A | B | C | D | Min. | Standard | Max. | | | | | | |
| Heating operation | 1 room | 20 | 3.0 | - | - | - | 1.5 | 3.0 | 3.5 | 600 | 1060 | 1330 | 4.9 | 4.7 | 4.5 |
| | | 25 | 3.4 | - | - | - | 1.5 | 3.4 | 4.0 | 600 | 1220 | 1510 | 5.6 | 5.4 | 5.1 |
| | | 35 | 4.5 | - | - | - | 1.5 | 4.5 | 4.8 | 600 | 1510 | 1790 | 6.9 | 6.6 | 6.4 |
| | | 50 | 5.8 | - | - | - | 1.5 | 5.8 | 6.2 | 600 | 1950 | 2310 | 9.0 | 8.6 | 8.2 |
| | | 60 | 6.8 | - | - | - | 1.5 | 6.8 | 7.1 | 600 | 2240 | 2660 | 10.3 | 9.8 | 9.4 |
| | 2 room | 20 + 20 | 2.70 | 2.70 | - | - | 2.1 | 5.4 | 7.0 | 630 | 1370 | 1870 | 6.3 | 6.0 | 5.8 |
| | | 20 + 25 | 2.62 | 3.28 | - | - | 2.1 | 5.9 | 7.3 | 630 | 1560 | 2130 | 7.2 | 6.9 | 6.6 |
| | | 20 + 35 | 2.51 | 4.39 | - | - | 2.1 | 6.9 | 7.9 | 630 | 1950 | 2650 | 9.0 | 8.6 | 8.2 |
| | | 20 + 50 | 2.37 | 5.93 | - | - | 2.1 | 8.3 | 8.4 | 630 | 2510 | 3430 | 11.5 | 11.0 | 10.6 |
| | | 20 + 60 | 2.08 | 6.23 | - | - | 2.1 | 8.3 | 8.4 | 630 | 2510 | 3430 | 11.5 | 11.0 | 10.6 |
| | | 25 + 25 | 3.20 | 3.20 | - | - | 2.1 | 6.4 | 7.7 | 630 | 1740 | 2480 | 8.0 | 7.6 | 7.3 |
| | | 25 + 35 | 3.08 | 4.32 | - | - | 2.1 | 7.4 | 8.2 | 630 | 2130 | 2910 | 9.8 | 9.4 | 9.0 |
| | | 25 + 50 | 2.77 | 5.53 | - | - | 2.1 | 8.3 | 8.4 | 630 | 2510 | 3430 | 11.5 | 11.0 | 10.6 |
| | | 25 + 60 | 2.44 | 5.86 | - | - | 2.1 | 8.3 | 8.4 | 630 | 2510 | 3430 | 11.5 | 11.0 | 10.6 |
| | | 35 + 35 | 4.15 | 4.15 | - | - | 2.1 | 8.3 | 8.4 | 630 | 2510 | 3430 | 11.5 | 11.0 | 10.6 |
| | | 35 + 50 | 3.42 | 4.88 | - | - | 2.1 | 8.3 | 8.4 | 630 | 2510 | 3430 | 11.5 | 11.0 | 10.6 |
| | | 35 + 60 | 3.06 | 5.24 | - | - | 2.1 | 8.3 | 8.4 | 630 | 2510 | 3430 | 11.5 | 11.0 | 10.6 |
| | | 50 + 50 | 4.15 | 4.15 | - | - | 2.1 | 8.3 | 8.4 | 630 | 2510 | 3430 | 11.5 | 11.0 | 10.6 |
| | | 50 + 60 | 3.77 | 4.53 | - | - | 2.1 | 8.3 | 8.4 | 630 | 2510 | 3430 | 11.5 | 11.0 | 10.6 |
| | | 60 + 60 | 4.15 | 4.15 | - | - | 2.1 | 8.3 | 8.4 | 630 | 2510 | 3430 | 11.5 | 11.0 | 10.6 |
| | 3 room | 20 + 20 + 20 | 2.57 | 2.57 | 2.57 | - | 3.2 | 7.7 | 9.1 | 660 | 1870 | 3430 | 8.6 | 8.2 | 7.9 |
| | | 20 + 20 + 25 | 2.46 | 2.46 | 3.08 | - | 3.2 | 8.0 | 9.1 | 660 | 1970 | 3430 | 9.0 | 8.7 | 8.3 |
| | | 20 + 20 + 35 | 2.27 | 2.27 | 3.97 | - | 3.2 | 8.5 | 9.1 | 660 | 2130 | 3430 | 9.8 | 9.4 | 9.0 |
| | | 20 + 20 + 50 | 2.00 | 2.00 | 5.00 | - | 3.2 | 9.0 | 9.1 | 660 | 2300 | 3430 | 10.6 | 10.1 | 9.7 |
| | | 20 + 20 + 60 | 1.80 | 1.80 | 5.40 | - | 3.2 | 9.0 | 9.1 | 660 | 2300 | 3430 | 10.6 | 10.1 | 9.7 |
| | | 20 + 25 + 25 | 2.34 | 2.93 | 2.93 | - | 3.2 | 8.2 | 9.1 | 660 | 2030 | 3430 | 9.3 | 8.9 | 8.5 |
| | | 20 + 25 + 35 | 2.20 | 2.75 | 3.85 | - | 3.2 | 8.8 | 9.1 | 660 | 2220 | 3430 | 10.2 | 9.7 | 9.3 |
| | | 20 + 25 + 50 | 1.89 | 2.37 | 4.74 | - | 3.2 | 9.0 | 9.1 | 660 | 2300 | 3430 | 10.6 | 10.1 | 9.7 |
| | | 20 + 25 + 60 | 1.71 | 2.14 | 5.14 | - | 3.2 | 9.0 | 9.1 | 660 | 2300 | 3430 | 10.6 | 10.1 | 9.7 |
| | | 20 + 35 + 35 | 2.00 | 3.50 | 3.50 | - | 3.2 | 9.0 | 9.1 | 660 | 2300 | 3430 | 10.6 | 10.1 | 9.7 |

| Indoor unit combination | | | Heating capacity (kW) | | | | | | | Power consumption(W) | | | Standard current(A) | | |
|---|---|---|---|---|---|---|---|---|---|---|---|---|---|---|---|
| | | | Room heating capacity | | | | Total capacity | | | Min. | Standard | Max. | 220V | 230V | 240V |
| | | | A | B | C | D | Min. | Standard | Max. | | | | | | |
| Heating operation | 3 room | 20 + 35 + 50 | 1.71 | 3.00 | 4.29 | - | 3.2 | 9.0 | 9.1 | 660 | 2300 | 3430 | 10.6 | 10.1 | 9.7 |
| | | 20 + 35 + 60 | 1.57 | 2.74 | 4.70 | - | 3.2 | 9.0 | 9.1 | 660 | 2300 | 3430 | 10.6 | 10.1 | 9.7 |
| | | 20 + 50 + 50 | 1.50 | 3.75 | 3.75 | - | 3.2 | 9.0 | 9.1 | 660 | 2300 | 3430 | 10.6 | 10.1 | 9.7 |
| | | 20 + 50 + 60 | 1.38 | 3.46 | 4.15 | - | 3.2 | 9.0 | 9.1 | 660 | 2300 | 3430 | 10.6 | 10.1 | 9.7 |
| | | 25 + 25 + 25 | 2.83 | 2.83 | 2.83 | - | 3.2 | 8.5 | 9.1 | 660 | 2130 | 3430 | 9.8 | 9.4 | 9.0 |
| | | 25 + 25 + 35 | 2.65 | 2.65 | 3.71 | - | 3.2 | 9.0 | 9.1 | 660 | 2300 | 3430 | 10.6 | 10.1 | 9.7 |
| | | 25 + 25 + 50 | 2.25 | 2.25 | 4.50 | - | 3.2 | 9.0 | 9.1 | 660 | 2300 | 3430 | 10.6 | 10.1 | 9.7 |
| | | 25 + 25 + 60 | 2.05 | 2.05 | 4.91 | - | 3.2 | 9.0 | 9.1 | 660 | 2300 | 3430 | 10.6 | 10.1 | 9.7 |
| | | 25 + 35 + 35 | 2.37 | 3.32 | 3.32 | - | 3.2 | 9.0 | 9.1 | 660 | 2300 | 3430 | 10.6 | 10.1 | 9.7 |
| | | 25 + 35 + 50 | 2.05 | 2.86 | 4.09 | - | 3.2 | 9.0 | 9.1 | 660 | 2300 | 3430 | 10.6 | 10.1 | 9.7 |
| | | 25 + 35 + 60 | 1.88 | 2.63 | 4.50 | - | 3.2 | 9.0 | 9.1 | 660 | 2300 | 3430 | 10.6 | 10.1 | 9.7 |
| | | 25 + 50 + 50 | 1.80 | 3.60 | 3.60 | - | 3.2 | 9.0 | 9.1 | 660 | 2300 | 3430 | 10.6 | 10.1 | 9.7 |
| | | 25 + 50 + 60 | 1.67 | 3.33 | 4.00 | - | 3.2 | 9.0 | 9.1 | 660 | 2300 | 3430 | 10.6 | 10.1 | 9.7 |
| | | 35 + 35 + 35 | 3.00 | 3.00 | 3.00 | - | 3.2 | 9.0 | 9.1 | 660 | 2300 | 3430 | 10.6 | 10.1 | 9.7 |
| | | 35 + 35 + 50 | 2.63 | 2.63 | 3.75 | - | 3.2 | 9.0 | 9.1 | 660 | 2300 | 3430 | 10.6 | 10.1 | 9.7 |
| | | 35 + 35 + 60 | 2.42 | 2.42 | 4.15 | - | 3.2 | 9.0 | 9.1 | 660 | 2300 | 3430 | 10.6 | 10.1 | 9.7 |
| | | 35 + 50 + 50 | 2.33 | 3.33 | 3.33 | - | 3.2 | 9.0 | 9.1 | 660 | 2300 | 3430 | 10.6 | 10.1 | 9.7 |
| | 4 room | 20 + 20 + 20 + 20 | 2.28 | 2.28 | 2.28 | 2.28 | 3.6 | 9.1 | 9.5 | 800 | 2270 | 3430 | 10.4 | 10.0 | 9.6 |
| | | 20 + 20 + 20 + 25 | 2.14 | 2.14 | 2.14 | 2.68 | 3.6 | 9.1 | 9.5 | 800 | 2270 | 3430 | 10.4 | 10.0 | 9.6 |
| | | 20 + 20 + 20 + 35 | 1.94 | 1.94 | 1.94 | 3.39 | 3.6 | 9.2 | 9.5 | 800 | 2290 | 3430 | 10.5 | 10.1 | 9.6 |
| | | 20 + 20 + 20 + 50 | 1.67 | 1.67 | 1.67 | 4.18 | 3.6 | 9.2 | 9.5 | 800 | 2290 | 3430 | 10.5 | 10.1 | 9.6 |
| | | 20 + 20 + 20 + 60 | 1.55 | 1.55 | 1.55 | 4.65 | 3.6 | 9.3 | 9.5 | 800 | 2310 | 3430 | 10.7 | 10.2 | 9.8 |
| | | 20 + 20 + 25 + 25 | 2.04 | 2.04 | 2.56 | 2.56 | 3.6 | 9.2 | 9.5 | 800 | 2290 | 3430 | 10.5 | 10.1 | 9.6 |
| | | 20 + 20 + 25 + 35 | 1.84 | 1.84 | 2.30 | 3.22 | 3.6 | 9.2 | 9.5 | 800 | 2290 | 3430 | 10.5 | 10.1 | 9.6 |
| | | 20 + 20 + 25 + 50 | 1.62 | 1.62 | 2.02 | 4.04 | 3.6 | 9.3 | 9.5 | 800 | 2310 | 3430 | 10.7 | 10.2 | 9.8 |
| | | 20 + 20 + 25 + 60 | 1.49 | 1.49 | 1.86 | 4.46 | 3.6 | 9.3 | 9.5 | 800 | 2310 | 3430 | 10.7 | 10.2 | 9.8 |
| | | 20 + 20 + 35 + 35 | 1.67 | 1.67 | 2.93 | 2.93 | 3.6 | 9.2 | 9.5 | 800 | 2290 | 3430 | 10.5 | 10.1 | 9.6 |
| | | 20 + 20 + 35 + 50 | 1.49 | 1.49 | 2.60 | 3.72 | 3.6 | 9.3 | 9.5 | 800 | 2310 | 3430 | 10.7 | 10.2 | 9.8 |
| | | 20 + 20 + 35 + 60 | 1.38 | 1.38 | 2.41 | 4.13 | 3.6 | 9.3 | 9.5 | 800 | 2310 | 3430 | 10.7 | 10.2 | 9.8 |
| | | 20 + 25 + 25 + 25 | 1.94 | 2.42 | 2.42 | 2.42 | 3.6 | 9.2 | 9.5 | 800 | 2290 | 3430 | 10.5 | 10.1 | 9.6 |
| | | 20 + 25 + 25 + 35 | 1.75 | 2.19 | 2.19 | 3.07 | 3.6 | 9.2 | 9.5 | 800 | 2290 | 3430 | 10.5 | 10.1 | 9.6 |
| | | 20 + 25 + 25 + 50 | 1.55 | 1.94 | 1.94 | 3.88 | 3.6 | 9.3 | 9.5 | 800 | 2310 | 3430 | 10.7 | 10.2 | 9.8 |
| | | 20 + 25 + 25 + 60 | 1.43 | 1.79 | 1.79 | 4.29 | 3.6 | 9.3 | 9.5 | 800 | 2310 | 3430 | 10.7 | 10.2 | 9.8 |
| | | 20 + 25 + 35 + 35 | 1.62 | 2.02 | 2.83 | 2.83 | 3.6 | 9.3 | 9.5 | 800 | 2310 | 3430 | 10.7 | 10.2 | 9.8 |
| | | 20 + 25 + 35 + 50 | 1.43 | 1.79 | 2.50 | 3.58 | 3.6 | 9.3 | 9.5 | 800 | 2310 | 3430 | 10.7 | 10.2 | 9.8 |
| | | 20 + 35 + 35 + 35 | 1.49 | 2.60 | 2.60 | 2.60 | 3.6 | 9.3 | 9.5 | 800 | 2310 | 3430 | 10.7 | 10.2 | 9.8 |
| | | 25 + 25 + 25 + 25 | 2.30 | 2.30 | 2.30 | 2.30 | 3.6 | 9.2 | 9.5 | 800 | 2290 | 3430 | 10.5 | 10.1 | 9.6 |
| | | 25 + 25 + 25 + 35 | 2.09 | 2.09 | 2.09 | 2.93 | 3.6 | 9.2 | 9.5 | 800 | 2290 | 3430 | 10.5 | 10.1 | 9.6 |
| | | 25 + 25 + 25 + 50 | 1.86 | 1.86 | 1.86 | 3.72 | 3.6 | 9.3 | 9.5 | 800 | 2310 | 3430 | 10.7 | 10.2 | 9.8 |
| | | 25 + 25 + 25 + 60 | 1.72 | 1.72 | 1.72 | 4.13 | 3.6 | 9.3 | 9.5 | 800 | 2310 | 3430 | 10.7 | 10.2 | 9.8 |
| | | 25 + 25 + 35 + 35 | 1.94 | 1.94 | 2.71 | 2.71 | 3.6 | 9.3 | 9.5 | 800 | 2310 | 3430 | 10.7 | 10.2 | 9.8 |
| | | 25 + 25 + 35 + 50 | 1.72 | 1.72 | 2.41 | 3.44 | 3.6 | 9.3 | 9.5 | 800 | 2310 | 3430 | 10.7 | 10.2 | 9.8 |
| | | 25 + 35 + 35 + 35 | 1.79 | 2.50 | 2.50 | 2.50 | 3.6 | 9.3 | 9.5 | 800 | 2310 | 3430 | 10.7 | 10.2 | 9.8 |

| Indoor unit combination | | | Cooling capacity (kW) | | | | | | | Power consumption(W) | | | Standard current(A) | | |
|---|---|---|---|---|---|---|---|---|---|---|---|---|---|---|---|
| | | | Room cooling capacity | | | | Total capacity | | | Min. | Standard | Max. | 220V | 230V | 240V |
| | | | A | B | C | D | Min. | Standard | Max. | | | | | | |
| Cooling operation | 1 room | 20 | 2.0 | - | - | - | 1.8 | 2.0 | 2.7 | 480 | 530 | 950 | 2.4 | 2.3 | 2.2 |
| | | 25 | 2.5 | - | - | - | 1.8 | 2.5 | 3.2 | 480 | 730 | 1080 | 3.4 | 3.2 | 3.1 |
| | | 35 | 3.5 | - | - | - | 1.8 | 3.5 | 3.7 | 480 | 1120 | 1240 | 5.1 | 4.9 | 4.7 |
| | | 50 | 5.0 | - | - | - | 1.8 | 5.0 | 5.8 | 480 | 1710 | 2100 | 7.9 | 7.5 | 7.2 |
| | | 60 | 6.0 | - | - | - | 1.8 | 6.0 | 6.7 | 480 | 2140 | 2700 | 9.8 | 9.4 | 9.0 |
| | 2 room | 20 + 20 | 2.00 | 2.00 | - | - | 3.0 | 4.0 | 5.8 | 550 | 930 | 1910 | 4.3 | 4.1 | 3.9 |
| | | 20 + 25 | 2.00 | 2.50 | - | - | 3.0 | 4.5 | 6.1 | 550 | 1170 | 2060 | 5.4 | 5.1 | 4.9 |
| | | 20 + 35 | 2.00 | 3.50 | - | - | 3.0 | 5.5 | 6.6 | 550 | 1590 | 2320 | 7.3 | 7.0 | 6.7 |
| | | 20 + 50 | 1.97 | 4.93 | - | - | 3.0 | 6.9 | 7.5 | 550 | 2200 | 2830 | 10.1 | 9.7 | 9.3 |
| | | 20 + 60 | 1.85 | 5.55 | - | - | 3.0 | 7.4 | 7.5 | 550 | 2430 | 2830 | 11.2 | 10.7 | 10.2 |
| | | 25 + 25 | 2.50 | 2.50 | - | - | 3.0 | 5.0 | 6.5 | 550 | 1360 | 2270 | 6.2 | 6.0 | 5.7 |
| | | 25 + 35 | 2.46 | 3.44 | - | - | 3.0 | 5.9 | 6.8 | 550 | 1780 | 2470 | 8.2 | 7.8 | 7.5 |
| | | 25 + 50 | 2.47 | 4.93 | - | - | 3.0 | 7.4 | 7.5 | 550 | 2430 | 2830 | 11.2 | 10.7 | 10.2 |
| | | 25 + 60 | 2.18 | 5.22 | - | - | 3.0 | 7.4 | 7.5 | 550 | 2430 | 2830 | 11.2 | 10.7 | 10.2 |
| | | 35 + 35 | 3.45 | 3.45 | - | - | 3.0 | 6.9 | 7.5 | 550 | 2200 | 2680 | 10.1 | 9.7 | 9.3 |
| | | 35 + 50 | 3.05 | 4.35 | - | - | 3.0 | 7.4 | 7.5 | 550 | 2430 | 2830 | 11.2 | 10.7 | 10.2 |
| | | 35 + 60 | 2.73 | 4.67 | - | - | 3.0 | 7.4 | 7.5 | 550 | 2430 | 2830 | 11.2 | 10.7 | 10.2 |
| | | 50 + 50 | 3.70 | 3.70 | - | - | 3.0 | 7.4 | 7.5 | 550 | 2430 | 2830 | 11.2 | 10.7 | 10.2 |
| | | 50 + 60 | 3.36 | 4.04 | - | - | 3.0 | 7.4 | 7.5 | 550 | 2430 | 2830 | 11.2 | 10.7 | 10.2 |
| | | 60 + 60 | 3.70 | 3.70 | - | - | 3.0 | 7.4 | 7.5 | 550 | 2430 | 2830 | 11.2 | 10.7 | 10.2 |
| | 3 room | 20 + 20 + 20 | 2.00 | 2.00 | 2.00 | - | 3.7 | 6.0 | 8.1 | 670 | 1450 | 2830 | 6.7 | 6.4 | 6.1 |
| | | 20 + 20 + 25 | 2.00 | 2.00 | 2.50 | - | 3.7 | 6.5 | 8.1 | 670 | 1630 | 2830 | 7.5 | 7.2 | 6.9 |
| | | 20 + 20 + 35 | 1.89 | 1.89 | 3.31 | - | 3.7 | 7.1 | 8.1 | 670 | 1950 | 2830 | 9.0 | 8.6 | 8.2 |
| | | 20 + 20 + 50 | 1.73 | 1.73 | 4.33 | - | 3.7 | 7.8 | 8.1 | 670 | 2320 | 2830 | 10.7 | 10.2 | 9.8 |
| | | 20 + 20 + 60 | 1.56 | 1.56 | 4.68 | - | 3.7 | 7.8 | 8.1 | 670 | 2320 | 2830 | 10.7 | 10.2 | 9.8 |
| | | 20 + 25 + 25 | 1.94 | 2.43 | 2.43 | - | 3.7 | 6.8 | 8.1 | 670 | 1820 | 2830 | 8.4 | 8.0 | 7.7 |
| | | 20 + 25 + 35 | 1.88 | 2.34 | 3.28 | - | 3.7 | 7.5 | 8.1 | 670 | 2130 | 2830 | 9.8 | 9.4 | 9.0 |
| | | 20 + 25 + 50 | 1.64 | 2.05 | 4.11 | - | 3.7 | 7.8 | 8.1 | 670 | 2320 | 2830 | 10.7 | 10.2 | 9.8 |
| | | 20 + 25 + 60 | 1.49 | 1.86 | 4.46 | - | 3.7 | 7.8 | 8.1 | 670 | 2320 | 2830 | 10.7 | 10.2 | 9.8 |

R410A

# MULTI-SPLIT SYSTEM

| Indoor unit combination | | | Cooling capacity (kW) | | | | | | | Power consumption(W) | | | Standard current(A) | | |
|---|---|---|---|---|---|---|---|---|---|---|---|---|---|---|---|
| | | | Room cooling capacity | | | | Total capacity | | | Min. | Standard | Max. | 220V | 230V | 240V |
| | | | A | B | C | D | Min. | Standard | Max. | | | | | | |
| Cooling operation | 3 room | 20 + 35 + 35 | 1.73 | 3.03 | 3.03 | - | 3.7 | 7.8 | 8.1 | 670 | 2320 | 2830 | 10.7 | 10.2 | 9.8 |
| | | 20 + 35 + 50 | 1.49 | 2.60 | 3.71 | - | 3.7 | 7.8 | 8.1 | 670 | 2320 | 2830 | 10.7 | 10.2 | 9.8 |
| | | 20 + 35 + 60 | 1.36 | 2.37 | 4.07 | - | 3.7 | 7.8 | 8.1 | 670 | 2320 | 2830 | 10.7 | 10.2 | 9.8 |
| | | 20 + 50 + 50 | 1.30 | 3.25 | 3.25 | - | 3.7 | 7.8 | 8.1 | 670 | 2320 | 2830 | 10.7 | 10.2 | 9.8 |
| | | 20 + 50 + 60 | 1.20 | 3.00 | 3.60 | - | 3.7 | 7.8 | 8.1 | 670 | 2320 | 2830 | 10.7 | 10.2 | 9.8 |
| | | 25 + 25 + 25 | 2.37 | 2.37 | 2.37 | - | 3.7 | 7.1 | 8.1 | 670 | 1950 | 2830 | 9.0 | 8.6 | 8.2 |
| | | 25 + 25 + 35 | 2.29 | 2.29 | 3.21 | - | 3.7 | 7.8 | 8.1 | 670 | 2320 | 2830 | 10.7 | 10.2 | 9.8 |
| | | 25 + 25 + 50 | 1.95 | 1.95 | 3.90 | - | 3.7 | 7.8 | 8.1 | 670 | 2320 | 2830 | 10.7 | 10.2 | 9.8 |
| | | 25 + 25 + 60 | 1.77 | 1.77 | 4.25 | - | 3.7 | 7.8 | 8.1 | 670 | 2320 | 2830 | 10.7 | 10.2 | 9.8 |
| | | 25 + 35 + 35 | 2.05 | 2.87 | 2.87 | - | 3.7 | 7.8 | 8.1 | 670 | 2320 | 2830 | 10.7 | 10.2 | 9.8 |
| | | 25 + 35 + 50 | 1.77 | 2.48 | 3.55 | - | 3.7 | 7.8 | 8.1 | 670 | 2320 | 2830 | 10.7 | 10.2 | 9.8 |
| | | 25 + 35 + 60 | 1.63 | 2.28 | 3.90 | - | 3.7 | 7.8 | 8.1 | 670 | 2320 | 2830 | 10.7 | 10.2 | 9.8 |
| | | 25 + 50 + 50 | 1.56 | 3.12 | 3.12 | - | 3.7 | 7.8 | 8.1 | 670 | 2320 | 2830 | 10.7 | 10.2 | 9.8 |
| | | 25 + 50 + 60 | 1.44 | 2.89 | 3.47 | - | 3.7 | 7.8 | 8.1 | 670 | 2320 | 2830 | 10.7 | 10.2 | 9.8 |
| | | 35 + 35 + 35 | 2.60 | 2.60 | 2.60 | - | 3.7 | 7.8 | 8.1 | 670 | 2320 | 2830 | 10.7 | 10.2 | 9.8 |
| | | 35 + 35 + 50 | 2.28 | 2.28 | 3.25 | - | 3.7 | 7.8 | 8.1 | 670 | 2320 | 2830 | 10.7 | 10.2 | 9.8 |
| | | 35 + 35 + 60 | 2.10 | 2.10 | 3.60 | - | 3.7 | 7.8 | 8.1 | 670 | 2320 | 2830 | 10.7 | 10.2 | 9.8 |
| | | 35 + 50 + 50 | 2.02 | 2.89 | 2.89 | - | 3.7 | 7.8 | 8.1 | 670 | 2320 | 2830 | 10.7 | 10.2 | 9.8 |
| | 4 room | 20 + 20 + 20 + 20 | 1.95 | 1.95 | 1.95 | 1.95 | 4.4 | 7.8 | 8.7 | 890 | 2180 | 2830 | 9.9 | 9.5 | 9.1 |
| | | 20 + 20 + 20 + 25 | 1.84 | 1.84 | 1.84 | 2.29 | 4.4 | 7.8 | 8.7 | 890 | 2180 | 2830 | 9.9 | 9.5 | 9.1 |
| | | 20 + 20 + 20 + 35 | 1.66 | 1.66 | 1.66 | 2.91 | 4.4 | 7.9 | 8.7 | 890 | 2200 | 2830 | 10.0 | 9.6 | 9.2 |
| | | 20 + 20 + 20 + 50 | 1.44 | 1.44 | 1.44 | 3.59 | 4.4 | 7.9 | 8.7 | 890 | 2200 | 2830 | 10.0 | 9.6 | 9.2 |
| | | 20 + 20 + 20 + 60 | 1.33 | 1.33 | 1.33 | 4.00 | 4.4 | 8.0 | 8.7 | 890 | 2220 | 2830 | 10.1 | 9.7 | 9.3 |
| | | 20 + 20 + 25 + 25 | 1.76 | 1.76 | 2.19 | 2.19 | 4.4 | 7.9 | 8.7 | 890 | 2200 | 2830 | 10.0 | 9.6 | 9.2 |
| | | 20 + 20 + 25 + 35 | 1.58 | 1.58 | 1.98 | 2.77 | 4.4 | 7.9 | 8.7 | 890 | 2200 | 2830 | 10.0 | 9.6 | 9.2 |
| | | 20 + 20 + 25 + 50 | 1.37 | 1.37 | 1.72 | 3.43 | 4.4 | 7.9 | 8.7 | 890 | 2200 | 2830 | 10.0 | 9.6 | 9.2 |
| | | 20 + 20 + 25 + 60 | 1.28 | 1.28 | 1.60 | 3.84 | 4.4 | 8.0 | 8.7 | 890 | 2220 | 2830 | 10.1 | 9.7 | 9.3 |
| | | 20 + 20 + 35 + 35 | 1.44 | 1.44 | 2.51 | 2.51 | 4.4 | 7.9 | 8.7 | 890 | 2200 | 2830 | 10.0 | 9.6 | 9.2 |
| | | 20 + 20 + 35 + 50 | 1.28 | 1.28 | 2.24 | 3.20 | 4.4 | 8.0 | 8.7 | 890 | 2220 | 2830 | 10.1 | 9.7 | 9.3 |
| | | 20 + 20 + 35 + 60 | 1.19 | 1.19 | 2.07 | 3.56 | 4.4 | 8.0 | 8.7 | 890 | 2220 | 2830 | 10.1 | 9.7 | 9.3 |
| | | 20 + 25 + 25 + 25 | 1.66 | 2.08 | 2.08 | 2.08 | 4.4 | 7.9 | 8.7 | 890 | 2200 | 2830 | 10.0 | 9.6 | 9.2 |
| | | 20 + 25 + 25 + 35 | 1.50 | 1.88 | 1.88 | 2.63 | 4.4 | 7.9 | 8.7 | 890 | 2200 | 2830 | 10.0 | 9.6 | 9.2 |
| | | 20 + 25 + 25 + 50 | 1.33 | 1.67 | 1.67 | 3.33 | 4.4 | 8.0 | 8.7 | 890 | 2220 | 2830 | 10.1 | 9.7 | 9.3 |
| | | 20 + 25 + 25 + 60 | 1.23 | 1.54 | 1.54 | 3.69 | 4.4 | 8.0 | 8.7 | 890 | 2220 | 2830 | 10.1 | 9.7 | 9.3 |
| | | 20 + 25 + 35 + 35 | 1.37 | 1.72 | 2.40 | 2.40 | 4.4 | 7.9 | 8.7 | 890 | 2200 | 2830 | 10.0 | 9.6 | 9.2 |
| | | 20 + 25 + 35 + 50 | 1.23 | 1.54 | 2.15 | 3.08 | 4.4 | 8.0 | 8.7 | 890 | 2220 | 2830 | 10.1 | 9.7 | 9.3 |
| | | 20 + 35 + 35 + 35 | 1.28 | 2.24 | 2.24 | 2.24 | 4.4 | 8.0 | 8.7 | 890 | 2220 | 2830 | 10.1 | 9.7 | 9.3 |
| | | 25 + 25 + 25 + 25 | 1.98 | 1.98 | 1.98 | 1.98 | 4.4 | 7.9 | 8.7 | 890 | 2200 | 2830 | 10.0 | 9.6 | 9.2 |
| | | 25 + 25 + 25 + 35 | 1.80 | 1.80 | 1.80 | 2.51 | 4.4 | 7.9 | 8.7 | 890 | 2200 | 2830 | 10.0 | 9.6 | 9.2 |
| | | 25 + 25 + 25 + 50 | 1.60 | 1.60 | 1.60 | 3.20 | 4.4 | 8.0 | 8.7 | 890 | 2220 | 2830 | 10.1 | 9.7 | 9.3 |
| | | 25 + 25 + 25 + 60 | 1.48 | 1.48 | 1.48 | 3.56 | 4.4 | 8.0 | 8.7 | 890 | 2220 | 2830 | 10.1 | 9.7 | 9.3 |
| | | 25 + 25 + 35 + 35 | 1.67 | 1.67 | 2.33 | 2.33 | 4.4 | 8.0 | 8.7 | 890 | 2220 | 2830 | 10.1 | 9.7 | 9.3 |
| | | 25 + 25 + 35 + 50 | 1.48 | 1.48 | 2.07 | 2.96 | 4.4 | 8.0 | 8.7 | 890 | 2220 | 2830 | 10.1 | 9.7 | 9.3 |
| | | 25 + 35 + 35 + 35 | 1.54 | 2.15 | 2.15 | 2.15 | 4.4 | 8.0 | 8.7 | 890 | 2220 | 2830 | 10.1 | 9.7 | 9.3 |

## SCM100ZM-S Table of Indoor unit combination only with SRK-ZSX type

| Indoor unit combination | | | Heating capacity (kW) | | | | | | | | | Power consumption(W) | | | Standard current(A) | | |
|---|---|---|---|---|---|---|---|---|---|---|---|---|---|---|---|---|---|
| | | | Room heating capacity | | | | | | Total capacity | | | Min. | Standard | Max. | 220V | 230V | 240V |
| | | | A | B | C | D | E | F | Min. | Standard | Max. | | | | | | |
| Heating operation | 1 room | 20 | 3.0 | - | - | - | | | 1.5 | 3.0 | 3.7 | 700 | 1010 | 1330 | 4.6 | 4.4 | 4.3 |
| | | 25 | 3.4 | - | - | - | | | 1.5 | 3.4 | 4.2 | 700 | 1150 | 1540 | 5.3 | 5.1 | 4.8 |
| | | 35 | 4.5 | - | - | - | | | 1.5 | 4.5 | 5.0 | 700 | 1540 | 1840 | 7.1 | 6.8 | 6.5 |
| | | 50 | 5.8 | - | - | - | | | 1.5 | 5.8 | 6.5 | 700 | 2000 | 2410 | 9.2 | 8.8 | 8.4 |
| | | 60 | 6.8 | - | - | - | | | 1.5 | 6.8 | 7.5 | 700 | 2360 | 2760 | 10.8 | 10.4 | 9.9 |
| | 2 room | 20+20 | 3.00 | 3.00 | - | - | - | - | 2.1 | 6.0 | 7.4 | 750 | 1510 | 1460 | 6.9 | 6.6 | 6.4 |
| | | 20+25 | 2.84 | 3.56 | - | - | - | - | 2.1 | 6.4 | 7.9 | 750 | 1630 | 2210 | 7.5 | 7.2 | 6.9 |
| | | 20+35 | 2.73 | 4.77 | - | - | - | - | 2.1 | 7.5 | 8.7 | 750 | 1950 | 2520 | 9.0 | 8.6 | 8.2 |
| | | 20+50 | 2.51 | 6.29 | - | - | - | - | 2.1 | 8.8 | 10.2 | 750 | 2380 | 3220 | 10.9 | 10.5 | 10.0 |
| | | 20+60 | 2.45 | 7.35 | - | - | - | - | 2.1 | 9.8 | 11.2 | 750 | 2780 | 3620 | 12.8 | 12.2 | 11.7 |
| | | 25+25 | 3.40 | 3.40 | - | - | - | - | 2.1 | 6.8 | 8.4 | 750 | 1740 | 2420 | 8.0 | 7.6 | 7.3 |
| | | 25+35 | 3.29 | 4.61 | - | - | - | - | 2.1 | 7.9 | 9.2 | 750 | 2100 | 2820 | 9.6 | 9.2 | 8.8 |
| | | 25+50 | 3.07 | 6.13 | - | - | - | - | 2.1 | 9.2 | 10.7 | 750 | 2580 | 3610 | 11.8 | 11.3 | 10.9 |
| | | 25+60 | 3.00 | 7.20 | - | - | - | - | 2.1 | 10.2 | 11.7 | 750 | 2980 | 3790 | 13.7 | 13.1 | 12.5 |
| | | 35+35 | 4.50 | 4.50 | - | - | - | - | 2.1 | 9.0 | 10.0 | 750 | 2470 | 3210 | 11.3 | 10.8 | 10.4 |
| | | 35+50 | 4.24 | 6.06 | - | - | - | - | 2.1 | 10.3 | 11.5 | 750 | 2980 | 3710 | 13.7 | 13.1 | 12.5 |
| | | 35+60 | 4.16 | 7.14 | - | - | - | - | 2.1 | 11.3 | 12.5 | 750 | 3430 | 4100 | 15.7 | 15.1 | 14.4 |
| | | 50+50 | 5.80 | 5.80 | - | - | - | - | 2.1 | 11.6 | 13.0 | 750 | 3580 | 4320 | 16.4 | 15.7 | 15.1 |
| | | 50+60 | 5.45 | 6.55 | - | - | - | - | 2.1 | 12.0 | 13.5 | 750 | 3720 | 4520 | 17.1 | 16.3 | 15.7 |
| | | 60+60 | 6.00 | 6.00 | - | - | - | - | 2.1 | 12.0 | 13.5 | 750 | 3720 | 4520 | 17.1 | 16.3 | 15.7 |
| | 3 room | 20+20+20 | 3.00 | 3.00 | 3.00 | - | - | - | 3.2 | 9.0 | 11.1 | 780 | 2230 | 3350 | 10.2 | 9.8 | 9.4 |
| | | 20+20+25 | 2.89 | 2.89 | 3.62 | - | - | - | 3.2 | 9.4 | 11.6 | 780 | 2350 | 3550 | 10.8 | 10.3 | 9.9 |
| | | 20+20+35 | 2.80 | 2.80 | 4.90 | - | - | - | 3.2 | 10.5 | 12.4 | 780 | 2710 | 3820 | 12.4 | 11.9 | 11.4 |
| | | 20+20+50 | 2.62 | 2.62 | 6.56 | - | - | - | 3.2 | 11.8 | 13.5 | 780 | 3210 | 4190 | 14.7 | 14.1 | 13.5 |
| | | 20+20+60 | 2.40 | 2.40 | 7.20 | - | - | - | 3.2 | 12.0 | 13.5 | 780 | 3350 | 4190 | 15.4 | 14.7 | 14.1 |
| | | 20+25+25 | 2.80 | 3.50 | 3.50 | - | - | - | 3.2 | 9.8 | 12.1 | 780 | 2510 | 3720 | 11.5 | 11.0 | 10.6 |
| | | 20+25+35 | 2.73 | 3.41 | 4.77 | - | - | - | 3.2 | 10.9 | 12.9 | 780 | 2910 | 3990 | 13.4 | 12.8 | 12.2 |

| Indoor unit combination | | | Heating capacity (kW) | | | | | | | | | Power consumption(W) | | | Standard current(A) | | |
|---|---|---|---|---|---|---|---|---|---|---|---|---|---|---|---|---|---|
| | | | Room heating capacity | | | | | | Total capacity | | | | | | | | |
| | | | A | B | C | D | E | F | Min. | Standard | Max. | Min. | Standard | Max. | 220V | 230V | 240V |
| Heating operation | 3 room | 20+25+50 | 2.53 | 3.16 | 6.32 | - | - | - | 3.2 | 12.0 | 13.5 | 780 | 3350 | 4190 | 15.4 | 14.7 | 14.1 |
| | | 20+25+60 | 2.29 | 2.86 | 6.86 | - | - | - | 3.2 | 12.0 | 13.5 | 780 | 3350 | 4190 | 15.4 | 14.7 | 14.1 |
| | | 20+35+35 | 2.67 | 4.67 | 4.67 | - | - | - | 3.2 | 12.0 | 13.5 | 780 | 3360 | 4190 | 15.4 | 14.8 | 14.1 |
| | | 20+35+50 | 2.29 | 4.00 | 5.71 | - | - | - | 3.2 | 12.0 | 13.5 | 780 | 3350 | 4190 | 15.4 | 14.7 | 14.1 |
| | | 20+35+60 | 2.09 | 3.65 | 6.26 | - | - | - | 3.2 | 12.0 | 13.5 | 780 | 3340 | 4190 | 15.3 | 14.7 | 14.1 |
| | | 20+50+50 | 2.00 | 5.00 | 5.00 | - | - | - | 3.2 | 12.0 | 13.5 | 780 | 3340 | 4190 | 15.3 | 14.7 | 14.1 |
| | | 20+50+60 | 1.85 | 4.62 | 5.54 | - | - | - | 3.2 | 12.0 | 13.5 | 780 | 3340 | 4190 | 15.3 | 14.7 | 14.1 |
| | | 20+60+60 | 1.71 | 5.14 | 5.14 | - | - | - | 3.2 | 12.0 | 13.5 | 780 | 3330 | 4190 | 15.3 | 14.6 | 14.0 |
| | | 25+25+25 | 3.40 | 3.40 | 3.40 | - | - | - | 3.2 | 10.2 | 12.6 | 780 | 2710 | 3880 | 12.4 | 11.9 | 11.4 |
| | | 25+25+35 | 3.32 | 3.32 | 4.65 | - | - | - | 3.2 | 11.3 | 13.4 | 780 | 3110 | 4120 | 14.3 | 13.7 | 13.1 |
| | | 25+25+50 | 3.00 | 3.00 | 6.00 | - | - | - | 3.2 | 12.0 | 13.5 | 780 | 3350 | 4190 | 15.4 | 14.7 | 14.1 |
| | | 25+25+60 | 2.73 | 2.73 | 6.55 | - | - | - | 3.2 | 12.0 | 13.5 | 780 | 3350 | 4190 | 15.4 | 14.7 | 14.1 |
| | | 25+35+35 | 3.16 | 4.42 | 4.42 | - | - | - | 3.2 | 12.0 | 13.5 | 780 | 3350 | 4190 | 15.4 | 14.7 | 14.1 |
| | | 25+35+50 | 2.73 | 3.82 | 5.45 | - | - | - | 3.2 | 12.0 | 13.5 | 780 | 3350 | 4190 | 15.4 | 14.7 | 14.1 |
| | | 25+35+60 | 2.50 | 3.50 | 6.00 | - | - | - | 3.2 | 12.0 | 13.5 | 780 | 3340 | 4190 | 15.3 | 14.7 | 14.1 |
| | | 25+50+50 | 2.40 | 4.80 | 4.80 | - | - | - | 3.2 | 12.0 | 13.5 | 780 | 3340 | 4190 | 15.3 | 14.7 | 14.1 |
| | | 25+50+60 | 2.22 | 4.44 | 5.33 | - | - | - | 3.2 | 12.0 | 13.5 | 780 | 3330 | 4190 | 15.3 | 14.6 | 14.0 |
| | | 25+60+60 | 2.07 | 4.97 | 4.97 | - | - | - | 3.2 | 12.0 | 13.5 | 780 | 3330 | 4190 | 15.3 | 14.6 | 14.0 |
| | | 35+35+35 | 4.00 | 4.00 | 4.00 | - | - | - | 3.2 | 12.0 | 13.5 | 780 | 3350 | 4190 | 15.4 | 14.7 | 14.1 |
| | | 35+35+50 | 3.50 | 3.50 | 5.00 | - | - | - | 3.2 | 12.0 | 13.5 | 780 | 3340 | 4190 | 15.3 | 14.7 | 14.1 |
| | | 35+35+60 | 3.23 | 3.23 | 5.54 | - | - | - | 3.2 | 12.0 | 13.5 | 780 | 3340 | 4190 | 15.3 | 14.7 | 14.1 |
| | | 35+50+50 | 3.11 | 4.44 | 4.44 | - | - | - | 3.2 | 12.0 | 13.5 | 780 | 3330 | 4190 | 15.3 | 14.6 | 14.0 |
| | | 35+50+60 | 2.90 | 4.14 | 4.97 | - | - | - | 3.2 | 12.0 | 13.5 | 780 | 3330 | 4190 | 15.3 | 14.6 | 14.0 |
| | | 35+60+60 | 2.71 | 4.65 | 4.65 | - | - | - | 3.2 | 12.0 | 13.5 | 780 | 3320 | 4190 | 15.2 | 14.6 | 14.0 |
| | | 50+50+50 | 4.00 | 4.00 | 4.00 | - | - | - | 3.2 | 12.0 | 13.5 | 780 | 3330 | 4190 | 15.3 | 14.6 | 14.0 |
| | | 50+50+60 | 3.75 | 3.75 | 4.50 | - | - | - | 3.2 | 12.0 | 13.5 | 780 | 3320 | 4190 | 15.2 | 14.6 | 14.0 |
| | 4 room | 20+20+20+20 | 3.00 | 3.00 | 3.00 | 3.00 | - | - | 3.6 | 12.0 | 13.5 | 950 | 3230 | 3840 | 14.7 | 14.1 | 13.5 |
| | | 20+20+20+25 | 2.82 | 2.82 | 2.82 | 3.53 | - | - | 3.6 | 12.0 | 13.5 | 950 | 3230 | 3840 | 14.7 | 14.1 | 13.5 |
| | | 20+20+20+35 | 2.53 | 2.53 | 2.53 | 4.42 | - | - | 3.6 | 12.0 | 13.5 | 950 | 3230 | 3840 | 14.7 | 14.1 | 13.5 |
| | | 20+20+20+50 | 2.18 | 2.18 | 2.18 | 5.45 | - | - | 3.6 | 12.0 | 13.5 | 950 | 3220 | 3840 | 14.7 | 14.0 | 13.4 |
| | | 20+20+20+60 | 2.00 | 2.00 | 2.00 | 6.00 | - | - | 3.6 | 12.0 | 13.5 | 950 | 3220 | 3840 | 14.7 | 14.0 | 13.4 |
| | | 20+20+25+25 | 2.67 | 2.67 | 3.33 | 3.33 | - | - | 3.6 | 12.0 | 13.5 | 950 | 3230 | 3840 | 14.7 | 14.1 | 13.5 |
| | | 20+20+25+35 | 2.40 | 2.40 | 3.00 | 4.20 | - | - | 3.6 | 12.0 | 13.5 | 950 | 3220 | 3840 | 14.7 | 14.0 | 13.4 |
| | | 20+20+25+50 | 2.09 | 2.09 | 2.61 | 5.22 | - | - | 3.6 | 12.0 | 13.5 | 950 | 3220 | 3840 | 14.7 | 14.0 | 13.4 |
| | | 20+20+25+60 | 1.92 | 1.92 | 2.40 | 5.76 | - | - | 3.6 | 12.0 | 13.5 | 950 | 3340 | 3840 | 15.2 | 14.5 | 13.9 |
| | | 20+20+35+35 | 2.18 | 2.18 | 3.82 | 3.82 | - | - | 3.6 | 12.0 | 13.5 | 950 | 3220 | 3840 | 14.7 | 14.0 | 13.4 |
| | | 20+20+35+50 | 1.92 | 1.92 | 3.36 | 4.80 | - | - | 3.6 | 12.0 | 13.5 | 950 | 3340 | 3840 | 15.2 | 14.5 | 13.9 |
| | | 20+20+35+60 | 1.78 | 1.78 | 3.11 | 5.33 | - | - | 3.6 | 12.0 | 13.5 | 950 | 3210 | 3840 | 14.6 | 14.0 | 13.4 |
| | | 20+20+50+50 | 1.71 | 1.71 | 4.29 | 4.29 | - | - | 3.6 | 12.0 | 13.5 | 950 | 3210 | 3840 | 14.6 | 14.0 | 13.4 |
| | | 20+20+50+60 | 1.60 | 1.60 | 4.00 | 4.80 | - | - | 3.6 | 12.0 | 13.5 | 950 | 3210 | 3840 | 14.6 | 14.0 | 13.4 |
| | | 20+20+60+60 | 1.50 | 1.50 | 4.50 | 4.50 | - | - | 3.6 | 12.0 | 13.5 | 950 | 3200 | 3840 | 14.6 | 13.9 | 13.3 |
| | | 20+25+25+25 | 2.53 | 3.16 | 3.16 | 3.16 | - | - | 3.6 | 12.0 | 13.5 | 950 | 3230 | 3840 | 14.7 | 14.1 | 13.5 |
| | | 20+25+25+35 | 2.29 | 2.86 | 2.86 | 4.00 | - | - | 3.6 | 12.0 | 13.5 | 950 | 3220 | 3840 | 14.7 | 14.0 | 13.4 |
| | | 20+25+25+50 | 2.00 | 2.50 | 2.50 | 5.00 | - | - | 3.6 | 12.0 | 13.5 | 950 | 3220 | 3840 | 14.7 | 14.0 | 13.4 |
| | | 20+25+25+60 | 1.85 | 2.31 | 2.31 | 5.54 | - | - | 3.6 | 12.0 | 13.5 | 950 | 3340 | 3840 | 15.2 | 14.5 | 13.9 |
| | | 20+25+35+35 | 2.09 | 2.61 | 3.65 | 3.65 | - | - | 3.6 | 12.0 | 13.5 | 950 | 3220 | 3840 | 14.7 | 14.0 | 13.4 |
| | | 20+25+35+50 | 1.85 | 2.31 | 3.23 | 4.62 | - | - | 3.6 | 12.0 | 13.5 | 950 | 3340 | 3840 | 15.2 | 14.5 | 13.9 |
| | | 20+25+35+60 | 1.71 | 2.14 | 3.00 | 5.14 | - | - | 3.6 | 12.0 | 13.5 | 950 | 3210 | 3840 | 14.6 | 14.0 | 13.4 |
| | | 20+25+50+50 | 1.66 | 2.07 | 4.14 | 4.14 | - | - | 3.6 | 12.0 | 13.5 | 950 | 3210 | 3840 | 14.6 | 14.0 | 13.4 |
| | | 20+25+50+60 | 1.55 | 1.94 | 3.87 | 4.65 | - | - | 3.6 | 12.0 | 13.5 | 950 | 3200 | 3840 | 14.6 | 13.9 | 13.3 |
| | | 20+35+35+35 | 1.92 | 3.36 | 3.36 | 3.36 | - | - | 3.6 | 12.0 | 13.5 | 950 | 3340 | 3840 | 15.2 | 14.5 | 13.9 |
| | | 20+35+35+50 | 1.71 | 3.00 | 3.00 | 4.29 | - | - | 3.6 | 12.0 | 13.5 | 950 | 3210 | 3840 | 14.6 | 14.0 | 13.4 |
| | | 20+35+35+60 | 1.60 | 2.80 | 2.80 | 4.80 | - | - | 3.6 | 12.0 | 13.5 | 950 | 3210 | 3840 | 14.6 | 14.0 | 13.4 |
| | | 20+35+50+50 | 1.55 | 2.71 | 3.87 | 3.87 | - | - | 3.6 | 12.0 | 13.5 | 950 | 3200 | 3840 | 14.6 | 13.9 | 13.3 |
| | | 25+25+25+25 | 3.00 | 3.00 | 3.00 | 3.00 | - | - | 3.6 | 12.0 | 13.5 | 950 | 3220 | 3840 | 14.7 | 14.0 | 13.4 |
| | | 25+25+25+35 | 2.73 | 2.73 | 2.73 | 3.82 | - | - | 3.6 | 12.0 | 13.5 | 950 | 3220 | 3840 | 14.7 | 14.0 | 13.4 |
| | | 25+25+25+50 | 2.40 | 2.40 | 2.40 | 4.80 | - | - | 3.6 | 12.0 | 13.5 | 950 | 3340 | 3840 | 15.2 | 14.5 | 13.9 |
| | | 25+25+25+60 | 2.22 | 2.22 | 2.22 | 5.33 | - | - | 3.6 | 12.0 | 13.5 | 950 | 3210 | 3840 | 14.6 | 14.0 | 13.4 |
| | | 25+25+35+35 | 2.50 | 2.50 | 3.50 | 3.50 | - | - | 3.6 | 12.0 | 13.5 | 950 | 3220 | 3840 | 14.7 | 14.0 | 13.4 |
| | | 25+25+35+50 | 2.22 | 2.22 | 3.11 | 4.44 | - | - | 3.6 | 12.0 | 13.5 | 950 | 3210 | 3840 | 14.6 | 14.0 | 13.4 |
| | | 25+25+35+60 | 2.07 | 2.07 | 2.90 | 4.97 | | | 3.6 | 12.0 | 13.5 | 950 | 3210 | 3840 | 14.6 | 14.0 | 13.4 |
| | | 25+25+50+50 | 2.00 | 2.00 | 4.00 | 4.00 | - | - | 3.6 | 12.0 | 13.5 | 950 | 3210 | 3840 | 14.6 | 14.0 | 13.4 |
| | | 25+25+50+60 | 1.88 | 1.88 | 3.75 | 4.50 | - | - | 3.6 | 12.0 | 13.5 | 950 | 3200 | 3840 | 14.6 | 13.9 | 13.3 |
| | | 25+35+35+35 | 2.31 | 3.23 | 3.23 | 3.23 | - | - | 3.6 | 12.0 | 13.5 | 950 | 3340 | 3840 | 15.2 | 14.5 | 13.9 |
| | | 25+35+35+50 | 2.07 | 2.90 | 2.90 | 4.14 | - | - | 3.6 | 12.0 | 13.5 | 950 | 3210 | 3840 | 14.6 | 14.0 | 13.4 |
| | | 25+35+35+60 | 1.94 | 2.71 | 2.71 | 4.65 | - | - | 3.6 | 12.0 | 13.5 | 950 | 3200 | 3840 | 14.6 | 13.9 | 13.3 |
| | | 25+35+50+50 | 1.88 | 2.63 | 3.75 | 3.75 | - | - | 3.6 | 12.0 | 13.5 | 950 | 3200 | 3840 | 14.6 | 13.9 | 13.3 |
| | | 35+35+35+35 | 3.00 | 3.00 | 3.00 | 3.00 | - | - | 3.6 | 12.0 | 13.5 | 950 | 3210 | 3840 | 14.6 | 14.0 | 13.4 |
| | | 35+35+35+50 | 2.71 | 2.71 | 2.71 | 3.87 | - | - | 3.6 | 12.0 | 13.5 | 950 | 3200 | 3840 | 14.6 | 13.9 | 13.3 |
| | 5 room | 20+20+20+20+20 | 2.40 | 2.40 | 2.40 | 2.40 | 2.40 | - | 4.0 | 12.0 | 13.5 | 1050 | 2930 | 3400 | 13.3 | 12.8 | 12.2 |
| | | 20+20+20+20+25 | 2.29 | 2.29 | 2.29 | 2.29 | 2.86 | - | 4.0 | 12.0 | 13.5 | 1050 | 2920 | 3400 | 13.3 | 12.7 | 12.2 |
| | | 20+20+20+20+35 | 2.09 | 2.09 | 2.09 | 2.09 | 3.65 | - | 4.0 | 12.0 | 13.5 | 1050 | 2920 | 3400 | 13.3 | 12.7 | 12.2 |
| | | 20+20+20+20+50 | 1.85 | 1.85 | 1.85 | 1.85 | 4.62 | - | 4.0 | 12.0 | 13.5 | 1050 | 2910 | 3400 | 13.2 | 12.7 | 12.1 |
| | | 20+20+20+20+60 | 1.71 | 1.71 | 1.71 | 1.71 | 5.14 | - | 4.0 | 12.0 | 13.5 | 1050 | 2910 | 3400 | 13.2 | 12.7 | 12.1 |
| | | 20+20+20+25+25 | 2.18 | 2.18 | 2.18 | 2.73 | 2.73 | - | 4.0 | 12.0 | 13.5 | 1050 | 2920 | 3400 | 13.3 | 12.7 | 12.2 |
| | | 20+20+20+25+35 | 2.00 | 2.00 | 2.00 | 2.50 | 3.50 | - | 4.0 | 12.0 | 13.5 | 1050 | 2920 | 3400 | 13.3 | 12.7 | 12.2 |
| | | 20+20+20+25+50 | 1.78 | 1.78 | 1.78 | 2.22 | 4.44 | - | 4.0 | 12.0 | 13.5 | 1050 | 2910 | 3400 | 13.2 | 12.7 | 12.1 |

R410A

# MULTI-SPLIT SYSTEM

| Indoor unit combination | | | Heating capacity (kW) | | | | | | | | | Power consumption(W) | | | Standard current(A) | | |
|---|---|---|---|---|---|---|---|---|---|---|---|---|---|---|---|---|---|
| | | | Room heating capacity | | | | | | Total capacity | | | Min. | Standard | Max. | 220V | 230V | 240V |
| | | | A | B | C | D | E | F | Min. | Standard | Max. | | | | | | |
| Heating operation | 5 room | 20+20+20+25+60 | 1.66 | 1.66 | 1.66 | 2.07 | 4.97 | - | 4.0 | 12.0 | 13.5 | 1050 | 2910 | 3400 | 13.2 | 12.7 | 12.1 |
| | | 20+20+20+35+35 | 1.85 | 1.85 | 1.85 | 3.23 | 3.23 | - | 4.0 | 12.0 | 13.5 | 1050 | 2910 | 3400 | 13.2 | 12.7 | 12.1 |
| | | 20+20+20+35+50 | 1.66 | 1.66 | 1.66 | 2.90 | 4.14 | - | 4.0 | 12.0 | 13.5 | 1050 | 2910 | 3400 | 13.2 | 12.7 | 12.1 |
| | | 20+20+20+35+60 | 1.55 | 1.55 | 1.55 | 2.71 | 4.65 | - | 4.0 | 12.0 | 13.5 | 1050 | 2900 | 3400 | 13.2 | 12.6 | 12.1 |
| | | 20+20+20+50+50 | 1.50 | 1.50 | 1.50 | 3.75 | 3.75 | - | 4.0 | 12.0 | 13.5 | 1050 | 2900 | 3400 | 13.2 | 12.6 | 12.1 |
| | | 20+20+25+25+25 | 2.09 | 2.09 | 2.61 | 2.61 | 2.61 | - | 4.0 | 12.0 | 13.5 | 1050 | 2920 | 3400 | 13.3 | 12.7 | 12.2 |
| | | 20+20+25+25+35 | 1.92 | 1.92 | 2.40 | 2.40 | 3.36 | - | 4.0 | 12.0 | 13.5 | 1050 | 2910 | 3400 | 13.2 | 12.7 | 12.1 |
| | | 20+20+25+25+50 | 1.71 | 1.71 | 2.14 | 2.14 | 4.29 | - | 4.0 | 12.0 | 13.5 | 1050 | 2910 | 3400 | 13.2 | 12.7 | 12.1 |
| | | 20+20+25+25+60 | 1.60 | 1.60 | 2.00 | 2.00 | 4.80 | - | 4.0 | 12.0 | 13.5 | 1050 | 2910 | 3400 | 13.2 | 12.7 | 12.1 |
| | | 20+20+25+35+35 | 1.78 | 1.78 | 2.22 | 3.11 | 3.11 | - | 4.0 | 12.0 | 13.5 | 1050 | 2910 | 3400 | 13.2 | 12.7 | 12.1 |
| | | 20+20+25+35+50 | 1.60 | 1.60 | 2.00 | 2.80 | 4.00 | - | 4.0 | 12.0 | 13.5 | 1050 | 2910 | 3400 | 13.2 | 12.7 | 12.1 |
| | | 20+20+25+35+60 | 1.50 | 1.50 | 1.88 | 2.63 | 4.50 | - | 4.0 | 12.0 | 13.5 | 1050 | 2900 | 3400 | 13.2 | 12.6 | 12.1 |
| | | 20+20+35+35+35 | 1.66 | 1.66 | 2.90 | 2.90 | 2.90 | - | 4.0 | 12.0 | 13.5 | 1050 | 2910 | 3400 | 13.2 | 12.7 | 12.1 |
| | | 20+20+35+35+50 | 1.50 | 1.50 | 2.63 | 2.63 | 3.75 | - | 4.0 | 12.0 | 13.5 | 1050 | 2900 | 3400 | 13.2 | 12.6 | 12.1 |
| | | 20+25+25+25+25 | 2.00 | 2.50 | 2.50 | 2.50 | 2.50 | - | 4.0 | 12.0 | 13.5 | 1050 | 2920 | 3400 | 13.3 | 12.7 | 12.2 |
| | | 20+25+25+25+35 | 1.85 | 2.31 | 2.31 | 2.31 | 3.23 | - | 4.0 | 12.0 | 13.5 | 1050 | 2910 | 3400 | 13.2 | 12.7 | 12.1 |
| | | 20+25+25+25+50 | 1.66 | 2.07 | 2.07 | 2.07 | 4.14 | - | 4.0 | 12.0 | 13.5 | 1050 | 2910 | 3400 | 13.2 | 12.7 | 12.1 |
| | | 20+25+25+25+60 | 1.55 | 1.94 | 1.94 | 1.94 | 4.65 | - | 4.0 | 12.0 | 13.5 | 1050 | 2900 | 3400 | 13.2 | 12.6 | 12.1 |
| | | 20+25+25+35+35 | 1.71 | 2.14 | 2.14 | 3.00 | 3.00 | - | 4.0 | 12.0 | 13.5 | 1050 | 2910 | 3400 | 13.2 | 12.7 | 12.1 |
| | | 20+25+25+35+50 | 1.55 | 1.94 | 1.94 | 2.71 | 3.87 | - | 4.0 | 12.0 | 13.5 | 1050 | 2900 | 3400 | 13.2 | 12.6 | 12.1 |
| | | 20+25+35+35+35 | 1.60 | 2.00 | 2.80 | 2.80 | 2.80 | - | 4.0 | 12.0 | 13.5 | 1050 | 2910 | 3400 | 13.2 | 12.7 | 12.1 |
| | | 20+35+35+35+35 | 1.50 | 2.63 | 2.63 | 2.63 | 2.63 | - | 4.0 | 12.0 | 13.5 | 1050 | 2900 | 3400 | 13.2 | 12.6 | 12.1 |
| | | 25+25+25+25+25 | 2.40 | 2.40 | 2.40 | 2.40 | 2.40 | - | 4.0 | 12.0 | 13.5 | 1050 | 2910 | 3400 | 13.2 | 12.7 | 12.1 |
| | | 25+25+25+25+35 | 2.22 | 2.22 | 2.22 | 2.22 | 3.11 | - | 4.0 | 12.0 | 13.5 | 1050 | 2910 | 3400 | 13.2 | 12.7 | 12.1 |
| | | 25+25+25+25+50 | 2.00 | 2.00 | 2.00 | 2.00 | 4.00 | - | 4.0 | 12.0 | 13.5 | 1050 | 2910 | 3400 | 13.2 | 12.7 | 12.1 |
| | | 25+25+25+25+60 | 1.88 | 1.88 | 1.88 | 1.88 | 4.50 | - | 4.0 | 12.0 | 13.5 | 1050 | 2900 | 3400 | 13.2 | 12.6 | 12.1 |
| | | 25+25+25+35+35 | 2.07 | 2.07 | 2.07 | 2.90 | 2.90 | - | 4.0 | 12.0 | 13.5 | 1050 | 2910 | 3400 | 13.2 | 12.7 | 12.1 |
| | | 25+25+25+35+50 | 1.88 | 1.88 | 1.88 | 2.63 | 3.75 | - | 4.0 | 12.0 | 13.5 | 1050 | 2900 | 3400 | 13.2 | 12.6 | 12.1 |
| | | 25+25+35+35+35 | 1.94 | 1.94 | 2.71 | 2.71 | 2.71 | - | 4.0 | 12.0 | 13.5 | 1050 | 2900 | 3400 | 13.2 | 12.6 | 12.1 |

| Indoor unit combination | | | Cooling capacity (kW) | | | | | | | | | Power consumption(W) | | | Standard current(A) | | |
|---|---|---|---|---|---|---|---|---|---|---|---|---|---|---|---|---|---|
| | | | Room cooling capacity | | | | | | Total capacity | | | Min. | Standard | Max. | 220V | 230V | 240V |
| | | | A | B | C | D | E | F | Min. | Standard | Max. | | | | | | |
| Cooling operation | 1 room | 20 | 2.0 | - | - | - | - | - | 1.8 | 2.0 | 2.8 | 650 | 750 | 1100 | 3.4 | 3.3 | 3.2 |
| | | 25 | 2.5 | - | - | - | - | - | 1.8 | 2.5 | 3.4 | 650 | 950 | 1350 | 4.4 | 4.2 | 4.0 |
| | | 35 | 3.5 | - | - | - | - | - | 1.8 | 3.5 | 3.9 | 650 | 1400 | 1600 | 6.4 | 6.1 | 5.9 |
| | | 50 | 5.0 | - | - | - | - | - | 1.8 | 5.0 | 6.1 | 650 | 2000 | 2500 | 9.2 | 8.8 | 8.4 |
| | | 60 | 6.0 | - | - | - | - | - | 1.8 | 6.0 | 7.0 | 650 | 2450 | 3000 | 11.2 | 10.8 | 10.3 |
| | 2 room | 20+20 | 2.00 | 2.00 | - | - | - | - | 3.0 | 4.0 | 5.6 | 740 | 910 | 1460 | 4.2 | 4.0 | 3.8 |
| | | 20+25 | 2.00 | 2.50 | - | - | - | - | 3.0 | 4.5 | 6.2 | 740 | 1050 | 1820 | 4.8 | 4.6 | 4.4 |
| | | 20+35 | 2.00 | 3.50 | - | - | - | - | 3.0 | 5.5 | 6.7 | 740 | 1430 | 2020 | 6.6 | 6.3 | 6.0 |
| | | 20+50 | 2.00 | 5.00 | - | - | - | - | 3.0 | 7.0 | 8.9 | 740 | 2180 | 2820 | 10.0 | 9.6 | 9.2 |
| | | 20+60 | 2.00 | 6.00 | - | - | - | - | 3.0 | 8.0 | 9.8 | 740 | 2530 | 3360 | 11.6 | 11.1 | 10.6 |
| | | 25+25 | 2.50 | 2.50 | - | - | - | - | 3.0 | 5.0 | 6.8 | 740 | 1350 | 2200 | 6.2 | 5.9 | 5.7 |
| | | 25+35 | 2.50 | 3.50 | - | - | - | - | 3.0 | 6.0 | 7.3 | 740 | 1720 | 2320 | 7.9 | 7.6 | 7.2 |
| | | 25+50 | 2.50 | 5.00 | - | - | - | - | 3.0 | 7.5 | 9.5 | 740 | 2350 | 3220 | 10.8 | 10.3 | 9.9 |
| | | 25+60 | 2.50 | 6.00 | - | - | - | - | 3.0 | 8.5 | 9.8 | 740 | 2680 | 3360 | 12.3 | 11.8 | 11.3 |
| | | 35+35 | 3.50 | 3.50 | - | - | - | - | 3.0 | 7.0 | 7.8 | 740 | 2180 | 2820 | 10.0 | 9.6 | 9.2 |
| | | 35+50 | 3.50 | 5.00 | - | - | - | - | 3.0 | 8.5 | 10.0 | 740 | 2680 | 3620 | 12.3 | 11.8 | 11.3 |
| | | 35+60 | 3.50 | 6.00 | - | - | - | - | 3.0 | 9.5 | 10.9 | 740 | 3120 | 3990 | 14.3 | 13.7 | 13.1 |
| | | 50+50 | 5.00 | 5.00 | - | - | - | - | 3.0 | 10.0 | 12.0 | 740 | 3350 | 4400 | 15.4 | 14.7 | 14.1 |
| | | 50+60 | 4.55 | 5.45 | - | - | - | - | 3.0 | 10.0 | 12.0 | 740 | 3350 | 4400 | 15.4 | 14.7 | 14.1 |
| | | 60+60 | 5.00 | 5.00 | - | - | - | - | 3.0 | 10.0 | 12.0 | 740 | 3340 | 4400 | 15.3 | 14.7 | 14.1 |
| | 3 room | 20+20+20 | 2.00 | 2.00 | 2.00 | - | - | - | 3.7 | 6.0 | 8.4 | 880 | 1460 | 2560 | 6.7 | 6.4 | 6.1 |
| | | 20+20+25 | 2.00 | 2.00 | 2.50 | - | - | - | 3.7 | 6.5 | 9.0 | 880 | 1650 | 2700 | 7.6 | 7.2 | 6.9 |
| | | 20+20+35 | 2.00 | 2.00 | 3.50 | - | - | - | 3.7 | 7.5 | 9.5 | 880 | 1980 | 3120 | 9.1 | 8.7 | 8.3 |
| | | 20+20+50 | 2.00 | 2.00 | 5.00 | - | - | - | 3.7 | 9.0 | 11.7 | 880 | 2600 | 4120 | 11.9 | 11.4 | 10.9 |
| | | 20+20+60 | 2.00 | 2.00 | 6.00 | - | - | - | 3.7 | 10.0 | 12.0 | 880 | 3120 | 4250 | 14.3 | 13.7 | 13.1 |
| | | 20+25+25 | 2.00 | 2.50 | 2.50 | - | - | - | 3.7 | 7.0 | 9.6 | 880 | 1850 | 3210 | 8.5 | 8.1 | 7.8 |
| | | 20+25+35 | 2.00 | 2.50 | 3.50 | - | - | - | 3.7 | 8.0 | 10.1 | 880 | 2320 | 3630 | 10.7 | 10.2 | 9.8 |
| | | 20+25+50 | 2.00 | 2.50 | 5.00 | - | - | - | 3.7 | 9.5 | 12.0 | 880 | 2980 | 4250 | 13.7 | 13.1 | 12.5 |
| | | 20+25+60 | 1.90 | 2.38 | 5.71 | - | - | - | 3.7 | 10.0 | 12.0 | 880 | 3120 | 4250 | 14.3 | 13.7 | 13.1 |
| | | 20+35+35 | 2.00 | 3.50 | 3.50 | - | - | - | 3.7 | 9.0 | 10.6 | 880 | 2780 | 3750 | 12.8 | 12.2 | 11.7 |
| | | 20+35+50 | 1.90 | 3.33 | 4.76 | - | - | - | 3.7 | 10.0 | 12.0 | 880 | 3120 | 4250 | 14.3 | 13.7 | 13.1 |
| | | 20+35+60 | 1.74 | 3.04 | 5.22 | - | - | - | 3.7 | 10.0 | 12.0 | 880 | 3110 | 4250 | 14.3 | 13.7 | 13.1 |
| | | 20+50+50 | 1.67 | 4.17 | 4.17 | - | - | - | 3.7 | 10.0 | 12.0 | 880 | 3110 | 4250 | 14.3 | 13.7 | 13.1 |
| | | 20+50+60 | 1.54 | 3.85 | 4.62 | - | - | - | 3.7 | 10.0 | 12.0 | 880 | 3110 | 4250 | 14.3 | 13.7 | 13.1 |
| | | 20+60+60 | 1.43 | 4.29 | 4.29 | - | - | - | 3.7 | 10.0 | 12.0 | 880 | 3100 | 4250 | 14.2 | 13.6 | 13.0 |
| | | 25+25+25 | 2.50 | 2.50 | 2.50 | - | - | - | 3.7 | 7.5 | 10.2 | 880 | 2030 | 3640 | 9.3 | 8.9 | 8.5 |
| | | 25+25+35 | 2.50 | 2.50 | 3.50 | - | - | - | 3.7 | 8.5 | 10.7 | 880 | 2520 | 3900 | 11.6 | 11.1 | 10.6 |
| | | 25+25+50 | 2.50 | 2.50 | 5.00 | - | - | - | 3.7 | 10.0 | 12.0 | 880 | 3120 | 4250 | 14.3 | 13.7 | 13.1 |
| | | 25+25+60 | 2.27 | 2.27 | 5.45 | - | - | - | 3.7 | 10.0 | 12.0 | 880 | 3120 | 4250 | 14.3 | 13.7 | 13.1 |
| | | 25+35+35 | 2.50 | 3.50 | 3.50 | - | - | - | 3.7 | 9.5 | 11.2 | 880 | 2980 | 3990 | 13.7 | 13.1 | 12.5 |
| | | 25+35+50 | 2.27 | 3.18 | 4.55 | - | - | - | 3.7 | 10.0 | 12.0 | 880 | 3120 | 4250 | 14.3 | 13.7 | 13.1 |
| | | 25+35+60 | 2.08 | 2.92 | 5.00 | - | - | - | 3.7 | 10.0 | 12.0 | 880 | 3110 | 4250 | 14.3 | 13.7 | 13.1 |
| | | 25+50+50 | 2.00 | 4.00 | 4.00 | - | - | - | 3.7 | 10.0 | 12.0 | 880 | 3110 | 4250 | 14.3 | 13.7 | 13.1 |
| | | 25+50+60 | 1.85 | 3.70 | 4.44 | - | - | - | 3.7 | 10.0 | 12.0 | 880 | 3100 | 4250 | 14.2 | 13.6 | 13.0 |

| Indoor unit combination | | | Cooling capacity (kW) | | | | | | | | | Power consumption(W) | | | Standard current(A) | | |
|---|---|---|---|---|---|---|---|---|---|---|---|---|---|---|---|---|---|
| | | | Room cooling capacity | | | | | | Total capacity | | | | | | | | |
| | | | A | B | C | D | E | F | Min. | Standard | Max. | Min. | Standard | Max. | 220V | 230V | 240V |
| Cooling operation | 3 room | 25+60+60 | 1.72 | 4.14 | 4.14 | - | - | - | 3.7 | 10.0 | 12.0 | 880 | 3100 | 4250 | 14.2 | 13.6 | 13.0 |
| | | 35+35+35 | 3.33 | 3.33 | 3.33 | - | - | - | 3.7 | 10.0 | 11.7 | 880 | 3120 | 4180 | 14.3 | 13.7 | 13.1 |
| | | 35+35+50 | 2.92 | 2.92 | 4.17 | - | - | - | 3.7 | 10.0 | 12.0 | 880 | 3110 | 4250 | 14.3 | 13.7 | 13.1 |
| | | 35+35+60 | 2.69 | 2.69 | 4.62 | - | - | - | 3.7 | 10.0 | 12.0 | 880 | 3110 | 4250 | 14.3 | 13.7 | 13.1 |
| | | 35+50+50 | 2.59 | 3.70 | 3.70 | - | - | - | 3.7 | 10.0 | 12.0 | 880 | 3100 | 4250 | 14.2 | 13.6 | 13.0 |
| | | 35+50+60 | 2.41 | 3.45 | 4.14 | | | | 3.7 | 10.0 | 12.0 | 880 | 3100 | 4250 | 14.2 | 13.6 | 13.0 |
| | | 35+60+60 | 2.26 | 3.87 | 3.87 | | | | 3.7 | 10.0 | 12.0 | 880 | 3090 | 4250 | 14.2 | 13.6 | 13.0 |
| | | 50+50+50 | 3.33 | 3.33 | 3.33 | - | - | - | 3.7 | 10.0 | 12.0 | 880 | 3100 | 4250 | 14.2 | 13.6 | 13.0 |
| | | 50+50+60 | 3.13 | 3.13 | 3.75 | - | - | - | 3.7 | 10.0 | 12.0 | 880 | 3090 | 4250 | 14.2 | 13.6 | 13.0 |
| | 4 room | 20+20+20+20 | 2.00 | 2.00 | 2.00 | 2.00 | - | - | 4.4 | 8.0 | 11.2 | 1100 | 2050 | 3680 | 9.3 | 8.9 | 8.6 |
| | | 20+20+20+25 | 2.00 | 2.00 | 2.00 | 2.50 | - | - | 4.4 | 8.5 | 11.8 | 1100 | 2320 | 3890 | 10.6 | 10.1 | 9.7 |
| | | 20+20+20+35 | 2.00 | 2.00 | 2.00 | 3.50 | - | - | 4.4 | 9.5 | 12.0 | 1100 | 2820 | 4050 | 12.8 | 12.3 | 11.8 |
| | | 20+20+20+50 | 1.82 | 1.82 | 1.82 | 4.55 | - | - | 4.4 | 10.0 | 12.0 | 1100 | 3020 | 4050 | 13.7 | 13.1 | 12.6 |
| | | 20+20+20+60 | 1.67 | 1.67 | 1.67 | 5.00 | - | - | 4.4 | 10.0 | 12.0 | 1100 | 3020 | 4050 | 13.7 | 13.1 | 12.6 |
| | | 20+20+25+25 | 2.00 | 2.00 | 2.50 | 2.50 | - | - | 4.4 | 9.0 | 12.0 | 1100 | 2520 | 4050 | 11.5 | 11.0 | 10.5 |
| | | 20+20+25+35 | 2.00 | 2.00 | 2.50 | 3.50 | - | - | 4.4 | 10.0 | 12.0 | 1100 | 3030 | 4050 | 13.8 | 13.2 | 12.6 |
| | | 20+20+25+50 | 1.74 | 1.74 | 2.17 | 4.35 | - | - | 4.4 | 10.0 | 12.0 | 1100 | 3020 | 4050 | 13.7 | 13.1 | 12.6 |
| | | 20+20+25+60 | 1.60 | 1.60 | 2.00 | 4.80 | - | - | 4.4 | 10.0 | 12.0 | 1100 | 3010 | 4050 | 13.7 | 13.1 | 12.6 |
| | | 20+20+35+35 | 1.82 | 1.82 | 3.18 | 3.18 | - | - | 4.4 | 10.0 | 12.0 | 1100 | 3020 | 4050 | 13.7 | 13.1 | 12.6 |
| | | 20+20+35+50 | 1.60 | 1.60 | 2.80 | 4.00 | - | - | 4.4 | 10.0 | 12.0 | 1100 | 3010 | 4050 | 13.7 | 13.1 | 12.6 |
| | | 20+20+35+60 | 1.48 | 1.48 | 2.59 | 4.44 | - | - | 4.4 | 10.0 | 12.0 | 1100 | 3010 | 4050 | 13.7 | 13.1 | 12.6 |
| | | 20+20+50+50 | 1.43 | 1.43 | 3.57 | 3.57 | - | - | 4.4 | 10.0 | 12.0 | 1100 | 3010 | 4050 | 13.7 | 13.1 | 12.6 |
| | | 20+20+50+60 | 1.33 | 1.33 | 3.33 | 4.00 | - | - | 4.4 | 10.0 | 12.0 | 1100 | 3000 | 4050 | 13.7 | 13.1 | 12.5 |
| | | 20+20+60+60 | 1.25 | 1.25 | 3.75 | 3.75 | - | - | 4.4 | 10.0 | 12.0 | 1100 | 2990 | 4050 | 13.6 | 13.0 | 12.5 |
| | | 20+25+25+25 | 2.00 | 2.50 | 2.50 | 2.50 | - | - | 4.4 | 9.5 | 12.0 | 1100 | 2820 | 4050 | 12.8 | 12.3 | 11.8 |
| | | 20+25+25+35 | 1.90 | 2.38 | 2.38 | 3.33 | - | - | 4.4 | 10.0 | 12.0 | 1100 | 3030 | 4050 | 13.8 | 13.2 | 12.6 |
| | | 20+25+25+50 | 1.67 | 2.08 | 2.08 | 4.17 | - | - | 4.4 | 10.0 | 12.0 | 1100 | 3020 | 4050 | 13.7 | 13.1 | 12.6 |
| | | 20+25+25+60 | 1.54 | 1.92 | 1.92 | 4.62 | - | - | 4.4 | 10.0 | 12.0 | 1100 | 3010 | 4050 | 13.7 | 13.1 | 12.6 |
| | | 20+25+35+35 | 1.74 | 2.17 | 3.04 | 3.04 | - | - | 4.4 | 10.0 | 12.0 | 1100 | 3020 | 4050 | 13.7 | 13.1 | 12.6 |
| | | 20+25+35+50 | 1.54 | 1.92 | 2.69 | 3.85 | - | - | 4.4 | 10.0 | 12.0 | 1100 | 3010 | 4050 | 13.7 | 13.1 | 12.6 |
| | | 20+25+35+60 | 1.43 | 1.79 | 2.50 | 4.29 | - | - | 4.4 | 10.0 | 12.0 | 1100 | 3010 | 4050 | 13.7 | 13.1 | 12.6 |
| | | 20+25+50+50 | 1.38 | 1.72 | 3.45 | 3.45 | - | - | 4.4 | 10.0 | 12.0 | 1100 | 3000 | 4050 | 13.7 | 13.1 | 12.5 |
| | | 20+25+50+60 | 1.29 | 1.61 | 3.23 | 3.87 | - | - | 4.4 | 10.0 | 12.0 | 1100 | 3000 | 4050 | 13.7 | 13.1 | 12.5 |
| | | 20+25+60+60 | 1.21 | 1.52 | 3.64 | 3.64 | - | - | 4.4 | 10.0 | 12.0 | 1100 | 2990 | 4050 | 13.6 | 13.0 | 12.5 |
| | | 20+35+35+35 | 1.60 | 2.80 | 2.80 | 2.80 | - | - | 4.4 | 10.0 | 12.0 | 1100 | 3010 | 4050 | 13.7 | 13.1 | 12.6 |
| | | 20+35+35+50 | 1.43 | 2.50 | 2.50 | 3.57 | - | - | 4.4 | 10.0 | 12.0 | 1100 | 3010 | 4050 | 13.7 | 13.1 | 12.6 |
| | | 20+35+35+60 | 1.33 | 2.33 | 2.33 | 4.00 | - | - | 4.4 | 10.0 | 12.0 | 1100 | 3000 | 4050 | 13.7 | 13.1 | 12.5 |
| | | 20+35+50+50 | 1.29 | 2.26 | 3.23 | 3.23 | - | - | 4.4 | 10.0 | 12.0 | 1100 | 3000 | 4050 | 13.7 | 13.1 | 12.5 |
| | | 25+25+25+25 | 2.50 | 2.50 | 2.50 | 2.50 | - | - | 4.4 | 10.0 | 12.0 | 1100 | 3030 | 4050 | 13.8 | 13.2 | 12.6 |
| | | 25+25+25+35 | 2.27 | 2.27 | 2.27 | 3.18 | - | - | 4.4 | 10.0 | 12.0 | 1100 | 3020 | 4050 | 13.7 | 13.1 | 12.6 |
| | | 25+25+25+50 | 2.00 | 2.00 | 2.00 | 4.00 | - | - | 4.4 | 10.0 | 12.0 | 1100 | 3010 | 4050 | 13.7 | 13.1 | 12.6 |
| | | 25+25+25+60 | 1.85 | 1.85 | 1.85 | 4.44 | - | - | 4.4 | 10.0 | 12.0 | 1100 | 3010 | 4050 | 13.7 | 13.1 | 12.6 |
| | | 25+25+35+35 | 2.08 | 2.08 | 2.92 | 2.92 | - | - | 4.4 | 10.0 | 12.0 | 1100 | 3020 | 4050 | 13.7 | 13.1 | 12.6 |
| | | 25+25+35+50 | 1.85 | 1.85 | 2.59 | 3.70 | - | - | 4.4 | 10.0 | 12.0 | 1100 | 3010 | 4050 | 13.7 | 13.1 | 12.6 |
| | | 25+25+35+60 | 1.72 | 1.72 | 2.41 | 4.14 | | | 4.4 | 10.0 | 12.0 | 1100 | 3000 | 4050 | 13.7 | 13.1 | 12.5 |
| | | 25+25+50+50 | 1.67 | 1.67 | 3.33 | 3.33 | - | - | 4.4 | 10.0 | 12.0 | 1100 | 3000 | 4050 | 13.7 | 13.1 | 12.5 |
| | | 25+25+50+60 | 1.56 | 1.56 | 3.13 | 3.75 | - | - | 4.4 | 10.0 | 12.0 | 1100 | 2990 | 4050 | 13.6 | 13.0 | 12.5 |
| | | 25+35+35+35 | 1.92 | 2.69 | 2.69 | 2.69 | - | - | 4.4 | 10.0 | 12.0 | 1100 | 3010 | 4050 | 13.7 | 13.1 | 12.6 |
| | | 25+35+35+50 | 1.72 | 2.41 | 2.41 | 3.45 | - | - | 4.4 | 10.0 | 12.0 | 1100 | 3000 | 4050 | 13.7 | 13.1 | 12.5 |
| | | 25+35+35+60 | 1.61 | 2.26 | 2.26 | 3.87 | - | - | 4.4 | 10.0 | 12.0 | 1100 | 3000 | 4050 | 13.7 | 13.1 | 12.5 |
| | | 25+35+50+50 | 1.56 | 2.19 | 3.13 | 3.13 | - | - | 4.4 | 10.0 | 12.0 | 1100 | 2990 | 4050 | 13.6 | 13.0 | 12.5 |
| | | 35+35+35+35 | 2.50 | 2.50 | 2.50 | 2.50 | - | - | 4.4 | 10.0 | 12.0 | 1100 | 3010 | 4050 | 13.7 | 13.1 | 12.6 |
| | | 35+35+35+50 | 2.26 | 2.26 | 2.26 | 3.23 | - | - | 4.4 | 10.0 | 12.0 | 1100 | 3000 | 4050 | 13.7 | 13.1 | 12.5 |
| | 5 room | 20+20+20+20+20 | 2.00 | 2.00 | 2.00 | 2.00 | 2.00 | - | 5.1 | 10.0 | 12.0 | 1210 | 2860 | 4030 | 13.0 | 12.4 | 11.9 |
| | | 20+20+20+20+25 | 1.90 | 1.90 | 1.90 | 1.90 | 2.38 | - | 5.1 | 10.0 | 12.0 | 1210 | 2860 | 4030 | 13.0 | 12.4 | 11.9 |
| | | 20+20+20+20+35 | 1.74 | 1.74 | 1.74 | 1.74 | 3.04 | - | 5.1 | 10.0 | 12.0 | 1210 | 2850 | 4030 | 13.0 | 12.4 | 11.9 |
| | | 20+20+20+20+50 | 1.54 | 1.54 | 1.54 | 1.54 | 3.85 | - | 5.1 | 10.0 | 12.0 | 1210 | 2840 | 4030 | 12.9 | 12.4 | 11.8 |
| | | 20+20+20+20+60 | 1.43 | 1.43 | 1.43 | 1.43 | 4.29 | - | 5.1 | 10.0 | 12.0 | 1210 | 2840 | 4030 | 12.9 | 12.4 | 11.8 |
| | | 20+20+20+25+25 | 1.82 | 1.82 | 1.82 | 2.27 | 2.27 | - | 5.1 | 10.0 | 12.0 | 1210 | 2860 | 4030 | 13.0 | 12.4 | 11.9 |
| | | 20+20+20+25+35 | 1.67 | 1.67 | 1.67 | 2.08 | 2.92 | - | 5.1 | 10.0 | 12.0 | 1210 | 2850 | 4030 | 13.0 | 12.4 | 11.9 |
| | | 20+20+20+25+50 | 1.48 | 1.48 | 1.48 | 1.85 | 3.70 | - | 5.1 | 10.0 | 12.0 | 1210 | 2840 | 4030 | 12.9 | 12.4 | 11.8 |
| | | 20+20+20+25+60 | 1.38 | 1.38 | 1.38 | 1.72 | 4.14 | - | 5.1 | 10.0 | 12.0 | 1210 | 2840 | 4030 | 12.9 | 12.4 | 11.8 |
| | | 20+20+20+35+35 | 1.54 | 1.54 | 1.54 | 2.69 | 2.69 | - | 5.1 | 10.0 | 12.0 | 1210 | 2840 | 4030 | 12.9 | 12.4 | 11.8 |
| | | 20+20+20+35+50 | 1.38 | 1.38 | 1.38 | 2.41 | 3.45 | - | 5.1 | 10.0 | 12.0 | 1210 | 2840 | 4030 | 12.9 | 12.4 | 11.8 |
| | | 20+20+20+35+60 | 1.29 | 1.29 | 1.29 | 2.26 | 3.87 | - | 5.1 | 10.0 | 12.0 | 1210 | 2830 | 4030 | 12.9 | 12.3 | 11.8 |
| | | 20+20+20+50+50 | 1.25 | 1.25 | 1.25 | 3.13 | 3.13 | - | 5.1 | 10.0 | 12.0 | 1210 | 2830 | 4030 | 12.9 | 12.3 | 11.8 |
| | | 20+20+25+25+25 | 1.74 | 1.74 | 2.17 | 2.17 | 2.17 | - | 5.1 | 10.0 | 12.0 | 1210 | 2850 | 4030 | 13.0 | 12.4 | 11.9 |
| | | 20+20+25+25+35 | 1.60 | 1.60 | 2.00 | 2.00 | 2.80 | - | 5.1 | 10.0 | 12.0 | 1210 | 2850 | 4030 | 13.0 | 12.4 | 11.9 |
| | | 20+20+25+25+50 | 1.43 | 1.43 | 1.79 | 1.79 | 3.57 | - | 5.1 | 10.0 | 12.0 | 1210 | 2840 | 4030 | 12.9 | 12.4 | 11.8 |
| | | 20+20+25+25+60 | 1.33 | 1.33 | 1.67 | 1.67 | 4.00 | - | 5.1 | 10.0 | 12.0 | 1210 | 2840 | 4030 | 12.9 | 12.4 | 11.8 |
| | | 20+20+25+35+35 | 1.48 | 1.48 | 1.85 | 2.59 | 2.59 | - | 5.1 | 10.0 | 12.0 | 1210 | 2840 | 4030 | 12.9 | 12.4 | 11.8 |
| | | 20+20+25+35+50 | 1.33 | 1.33 | 1.67 | 2.33 | 3.33 | - | 5.1 | 10.0 | 12.0 | 1210 | 2840 | 4030 | 12.9 | 12.4 | 11.8 |
| | | 20+20+25+35+60 | 1.25 | 1.25 | 1.56 | 2.19 | 3.75 | - | 5.1 | 10.0 | 12.0 | 1210 | 2830 | 4030 | 12.9 | 12.3 | 11.8 |
| | | 20+20+35+35+35 | 1.38 | 1.38 | 2.41 | 2.41 | 2.41 | - | 5.1 | 10.0 | 12.0 | 1210 | 2840 | 4030 | 12.9 | 12.4 | 11.8 |
| | | 20+20+35+35+50 | 1.25 | 1.25 | 2.19 | 2.19 | 3.13 | - | 5.1 | 10.0 | 12.0 | 1210 | 2830 | 4030 | 12.9 | 12.3 | 11.8 |
| | | 20+25+25+25+25 | 1.67 | 2.08 | 2.08 | 2.08 | 2.08 | - | 5.1 | 10.0 | 12.0 | 1210 | 2850 | 4030 | 13.0 | 12.4 | 11.9 |
| | | 20+25+25+25+35 | 1.54 | 1.92 | 1.92 | 1.92 | 2.69 | - | 5.1 | 10.0 | 12.0 | 1210 | 2840 | 4030 | 12.9 | 12.4 | 11.8 |

| Indoor unit combination | | | Cooling capacity (kW) | | | | | | | | | Power consumption(W) | | | Standard current(A) | | |
|---|---|---|---|---|---|---|---|---|---|---|---|---|---|---|---|---|---|
| | | | Room cooling capacity | | | | | | Total capacity | | | | | | | | |
| | | | A | B | C | D | E | F | Min. | Standard | Max. | Min. | Standard | Max. | 220V | 230V | 240V |
| Cooling operation | 5 room | 20+25+25+25+50 | 1.38 | 1.72 | 1.72 | 1.72 | 3.45 | - | 5.1 | 10.0 | 12.0 | 1210 | 2840 | 4030 | 12.9 | 12.4 | 11.8 |
| | | 20+25+25+25+60 | 1.29 | 1.61 | 1.61 | 1.61 | 3.87 | - | 5.1 | 10.0 | 12.0 | 1210 | 2830 | 4030 | 12.9 | 12.3 | 11.8 |
| | | 20+25+25+35+35 | 1.43 | 1.79 | 1.79 | 2.50 | 2.50 | - | 5.1 | 10.0 | 12.0 | 1210 | 2840 | 4030 | 12.9 | 12.4 | 11.8 |
| | | 20+25+25+35+50 | 1.29 | 1.61 | 1.61 | 2.26 | 3.23 | - | 5.1 | 10.0 | 12.0 | 1210 | 2830 | 4030 | 12.9 | 12.3 | 11.8 |
| | | 20+25+35+35+35 | 1.33 | 1.67 | 2.33 | 2.33 | 2.33 | - | 5.1 | 10.0 | 12.0 | 1210 | 2840 | 4030 | 12.9 | 12.4 | 11.8 |
| | | 20+35+35+35+35 | 1.25 | 2.19 | 2.19 | 2.19 | 2.19 | - | 5.1 | 10.0 | 12.0 | 1210 | 2830 | 4030 | 12.9 | 12.3 | 11.8 |
| | | 25+25+25+25+25 | 2.00 | 2.00 | 2.00 | 2.00 | 2.00 | - | 5.1 | 10.0 | 12.0 | 1210 | 2850 | 4030 | 13.0 | 12.4 | 11.9 |
| | | 25+25+25+25+35 | 1.85 | 1.85 | 1.85 | 1.85 | 2.59 | - | 5.1 | 10.0 | 12.0 | 1210 | 2840 | 4030 | 12.9 | 12.4 | 11.8 |
| | | 25+25+25+25+50 | 1.67 | 1.67 | 1.67 | 1.67 | 3.33 | - | 5.1 | 10.0 | 12.0 | 1210 | 2840 | 4030 | 12.9 | 12.4 | 11.8 |
| | | 25+25+25+25+60 | 1.56 | 1.56 | 1.56 | 1.56 | 3.75 | - | 5.1 | 10.0 | 12.0 | 1210 | 2830 | 4030 | 12.9 | 12.3 | 11.8 |
| | | 25+25+25+35+35 | 1.72 | 1.72 | 1.72 | 2.41 | 2.41 | - | 5.1 | 10.0 | 12.0 | 1210 | 2840 | 4030 | 12.9 | 12.4 | 11.8 |
| | | 25+25+25+35+50 | 1.56 | 1.56 | 1.56 | 2.19 | 3.13 | - | 5.1 | 10.0 | 12.0 | 1210 | 2830 | 4030 | 12.9 | 12.3 | 11.8 |
| | | 25+25+35+35+35 | 1.61 | 1.61 | 2.26 | 2.26 | 2.26 | - | 5.1 | 10.0 | 12.0 | 1210 | 2830 | 4030 | 12.9 | 12.3 | 11.8 |

## SCM100ZM-S Table of Indoor unit combination with other indoor unit

| Indoor unit combination | | | Heating capacity (kW) | | | | | | | | | Power consumption(W) | | | Standard current(A) | | |
|---|---|---|---|---|---|---|---|---|---|---|---|---|---|---|---|---|---|
| | | | Room heating capacity | | | | | | Total capacity | | | | | | | | |
| | | | A | B | C | D | E | F | Min. | Standard | Max. | Min. | Standard | Max. | 220V | 230V | 240V |
| Heating operation | 1 room | 20 | 3.0 | - | - | - | - | - | 1.5 | 3.0 | 3.6 | 700 | 1220 | 1330 | 5.6 | 5.4 | 5.1 |
| | | 25 | 3.4 | - | - | - | - | - | 1.5 | 3.4 | 4.1 | 700 | 1265 | 1540 | 5.8 | 5.6 | 5.3 |
| | | 35 | 4.5 | - | - | - | - | - | 1.5 | 4.5 | 4.9 | 700 | 1650 | 1840 | 7.6 | 7.2 | 6.9 |
| | | 50 | 5.8 | - | - | - | - | - | 1.5 | 5.8 | 6.4 | 700 | 2120 | 2410 | 9.7 | 9.3 | 8.9 |
| | | 60 | 6.8 | - | - | - | - | - | 1.5 | 6.8 | 7.4 | 700 | 2500 | 2760 | 11.5 | 11.0 | 10.5 |
| | | 71 | 8.0 | - | - | - | - | - | 1.5 | 8.0 | 8.1 | 700 | 3020 | 3090 | 13.9 | 13.3 | 12.7 |
| | 2 room | 20+20 | 3.00 | 3.00 | - | - | - | - | 2.1 | 6.0 | 7.2 | 750 | 1540 | 1860 | 7.1 | 6.8 | 6.5 |
| | | 20+25 | 2.84 | 3.56 | - | - | - | - | 2.1 | 6.4 | 7.7 | 750 | 1660 | 2210 | 7.6 | 7.3 | 7.0 |
| | | 20+35 | 2.73 | 4.77 | - | - | - | - | 2.1 | 7.5 | 8.5 | 750 | 1990 | 2520 | 9.1 | 8.7 | 8.4 |
| | | 20+50 | 2.51 | 6.29 | - | - | - | - | 2.1 | 8.8 | 10.0 | 750 | 2430 | 3220 | 11.2 | 10.7 | 10.2 |
| | | 20+60 | 2.45 | 7.35 | - | - | - | - | 2.1 | 9.8 | 11.0 | 750 | 2840 | 3620 | 13.0 | 12.5 | 12.0 |
| | | 20+71 | 2.42 | 8.58 | - | - | - | - | 2.1 | 11.0 | 11.6 | 750 | 2840 | 3620 | 13.0 | 12.5 | 12.0 |
| | | 25+25 | 3.40 | 3.40 | - | - | - | - | 2.1 | 6.8 | 8.2 | 750 | 1770 | 2420 | 8.1 | 7.8 | 7.4 |
| | | 25+35 | 3.29 | 4.61 | - | - | - | - | 2.1 | 7.9 | 9.0 | 750 | 2140 | 2820 | 9.8 | 9.4 | 9.0 |
| | | 25+50 | 3.07 | 6.13 | - | - | - | - | 2.1 | 9.2 | 10.5 | 750 | 2630 | 3610 | 12.1 | 11.6 | 11.1 |
| | | 25+60 | 3.00 | 7.20 | - | - | - | - | 2.1 | 10.2 | 11.5 | 750 | 3040 | 3790 | 14.0 | 13.4 | 12.8 |
| | | 25+71 | 2.97 | 8.43 | - | - | - | - | 2.1 | 11.4 | 12.1 | 750 | 3440 | 4250 | 15.8 | 15.1 | 14.5 |
| | | 35+35 | 4.50 | 4.50 | - | - | - | - | 2.1 | 9.0 | 9.8 | 750 | 2520 | 3210 | 11.6 | 11.1 | 10.6 |
| | | 35+50 | 4.24 | 6.06 | - | - | - | - | 2.1 | 10.3 | 11.3 | 750 | 3040 | 3710 | 14.0 | 13.4 | 12.8 |
| | | 35+60 | 4.16 | 7.14 | - | - | - | - | 2.1 | 11.3 | 12.3 | 750 | 3420 | 4320 | 15.7 | 15.0 | 14.4 |
| | | 35+71 | 3.96 | 8.04 | - | - | - | - | 2.1 | 12.0 | 12.9 | 750 | 4030 | 4690 | 18.5 | 17.7 | 17.0 |
| | | 50+50 | 5.80 | 5.80 | - | - | - | - | 2.1 | 11.6 | 12.8 | 750 | 3660 | 4620 | 16.8 | 16.1 | 15.4 |
| | | 50+60 | 5.45 | 6.55 | - | - | - | - | 2.1 | 12.0 | 13.3 | 750 | 4030 | 4920 | 18.5 | 17.7 | 17.0 |
| | | 50+71 | 4.96 | 7.04 | | | | | 2.1 | 12.0 | 13.3 | 750 | 4030 | 4920 | 18.5 | 17.7 | 17.0 |
| | | 60+60 | 6.00 | 6.00 | - | - | - | - | 2.1 | 12.0 | 13.3 | 750 | 4030 | 4920 | 18.5 | 17.7 | 17.0 |
| | | 60+71 | 5.50 | 6.50 | - | - | - | - | 2.1 | 12.0 | 13.3 | 750 | 4030 | 4920 | 18.5 | 17.7 | 17.0 |
| | | 71+71 | 6.00 | 6.00 | - | - | - | - | 2.1 | 12.0 | 13.3 | 750 | 4030 | 4920 | 18.5 | 17.7 | 17.0 |
| | 3 room | 20+20+20 | 3.00 | 3.00 | 3.00 | - | - | - | 3.2 | 9.0 | 10.9 | 780 | 2270 | 3350 | 10.4 | 10.0 | 9.6 |
| | | 20+20+25 | 2.89 | 2.89 | 3.62 | - | - | - | 3.2 | 9.4 | 11.4 | 780 | 2400 | 3550 | 11.0 | 10.5 | 10.1 |
| | | 20+20+35 | 2.80 | 2.80 | 4.90 | - | - | - | 3.2 | 10.5 | 12.2 | 780 | 2760 | 3820 | 12.7 | 12.1 | 11.6 |
| | | 20+20+50 | 2.62 | 2.62 | 6.56 | - | - | - | 3.2 | 11.8 | 13.3 | 780 | 3270 | 4290 | 15.0 | 14.4 | 13.8 |
| | | 20+20+60 | 2.40 | 2.40 | 7.20 | - | - | - | 3.2 | 12.0 | 13.3 | 780 | 3420 | 4290 | 15.7 | 15.0 | 14.4 |
| | | 20+20+71 | 2.16 | 2.16 | 7.68 | - | - | - | 3.2 | 12.0 | 13.3 | 780 | 3410 | 4290 | 15.7 | 15.0 | 14.4 |
| | | 20+25+25 | 2.80 | 3.50 | 3.50 | - | - | - | 3.2 | 9.8 | 11.9 | 780 | 2560 | 3720 | 11.8 | 11.2 | 10.8 |
| | | 20+25+35 | 2.73 | 3.41 | 4.77 | - | - | - | 3.2 | 10.9 | 12.7 | 780 | 2970 | 3990 | 13.6 | 13.0 | 12.5 |
| | | 20+25+50 | 2.53 | 3.16 | 6.32 | - | - | - | 3.2 | 12.0 | 13.3 | 780 | 3420 | 4290 | 15.7 | 15.0 | 14.4 |
| | | 20+25+60 | 2.29 | 2.86 | 6.86 | - | - | - | 3.2 | 12.0 | 13.3 | 780 | 3420 | 4290 | 15.7 | 15.0 | 14.4 |
| | | 20+25+71 | 2.07 | 2.59 | 7.34 | - | - | - | 3.2 | 12.0 | 13.3 | 780 | 3410 | 4290 | 15.7 | 15.0 | 14.4 |
| | | 20+35+35 | 2.67 | 4.67 | 4.67 | - | - | - | 3.2 | 12.0 | 13.3 | 780 | 3420 | 4290 | 15.7 | 15.0 | 14.4 |
| | | 20+35+50 | 2.29 | 4.00 | 5.71 | - | - | - | 3.2 | 12.0 | 13.3 | 780 | 3420 | 4290 | 15.7 | 15.0 | 14.4 |
| | | 20+35+60 | 2.09 | 3.65 | 6.26 | - | - | - | 3.2 | 12.0 | 13.3 | 780 | 3410 | 4290 | 15.7 | 15.0 | 14.4 |
| | | 20+35+71 | 1.90 | 3.33 | 6.76 | - | - | - | 3.2 | 12.0 | 13.3 | 780 | 3410 | 4290 | 15.7 | 15.0 | 14.4 |
| | | 20+50+50 | 2.00 | 5.00 | 5.00 | - | - | - | 3.2 | 12.0 | 13.3 | 780 | 3410 | 4290 | 15.7 | 15.0 | 14.4 |
| | | 20+50+60 | 1.85 | 4.62 | 5.54 | - | - | - | 3.2 | 12.0 | 13.3 | 780 | 3400 | 4290 | 15.6 | 14.9 | 14.3 |
| | | 20+50+71 | 1.70 | 4.26 | 6.04 | - | - | - | 4.2 | 12.0 | 13.3 | 780 | 3390 | 4290 | 15.6 | 14.9 | 14.3 |
| | | 20+60+60 | 1.71 | 5.14 | 5.14 | - | - | - | 5.2 | 12.0 | 13.3 | 780 | 3390 | 4290 | 15.6 | 14.9 | 14.3 |
| | | 20+60+71 | 1.59 | 4.77 | 5.64 | - | - | - | 6.2 | 12.0 | 13.3 | 780 | 3390 | 4290 | 15.6 | 14.9 | 14.3 |
| | | 25+25+25 | 3.40 | 3.40 | 3.40 | - | - | - | 3.2 | 10.2 | 12.4 | 780 | 2760 | 3880 | 12.7 | 12.1 | 11.6 |
| | | 25+25+35 | 3.32 | 3.32 | 4.65 | - | - | - | 3.2 | 11.3 | 13.2 | 780 | 3170 | 4120 | 14.6 | 13.9 | 13.3 |
| | | 25+25+50 | 3.00 | 3.00 | 6.00 | - | - | - | 3.2 | 12.0 | 13.3 | 780 | 3420 | 4290 | 15.7 | 15.0 | 14.4 |
| | | 25+25+60 | 2.73 | 2.73 | 6.55 | - | - | - | 3.2 | 12.0 | 13.3 | 780 | 3410 | 4290 | 15.7 | 15.0 | 14.4 |
| | | 25+25+71 | 2.48 | 2.48 | 7.04 | - | - | - | 3.2 | 12.0 | 13.3 | 780 | 3410 | 4290 | 15.7 | 15.0 | 14.4 |
| | | 25+35+35 | 3.16 | 4.42 | 4.42 | - | - | - | 3.2 | 12.0 | 13.3 | 780 | 3420 | 4290 | 15.7 | 15.0 | 14.4 |
| | | 25+35+50 | 2.73 | 3.82 | 5.45 | - | - | - | 3.2 | 12.0 | 13.3 | 780 | 3410 | 4290 | 15.7 | 15.0 | 14.4 |
| | | 25+35+60 | 2.50 | 3.50 | 6.00 | - | - | - | 3.2 | 12.0 | 13.3 | 780 | 3410 | 4290 | 15.7 | 15.0 | 14.4 |
| | | 25+35+71 | 2.29 | 3.21 | 6.50 | - | - | - | 4.2 | 12.0 | 13.3 | 780 | 3400 | 4290 | 15.6 | 14.9 | 14.3 |
| | | 25+50+50 | 2.40 | 4.80 | 4.80 | - | - | - | 3.2 | 12.0 | 13.3 | 780 | 3410 | 4290 | 15.7 | 15.0 | 14.4 |
| | | 25+50+60 | 2.22 | 4.44 | 5.33 | - | - | - | 3.2 | 12.0 | 13.3 | 780 | 3400 | 4290 | 15.6 | 14.9 | 14.3 |

| Indoor unit combination | | | Heating capacity (kW) | | | | | | | | | Power consumption(W) | | | Standard current(A) | | |
|---|---|---|---|---|---|---|---|---|---|---|---|---|---|---|---|---|---|
| | | | Room heating capacity | | | | | | Total capacity | | | | | | | | |
| | | | A | B | C | D | E | F | Min. | Standard | Max. | Min. | Standard | Max. | 220V | 230V | 240V |
| Heating operation | 3 room | 25+50+71 | 2.05 | 4.11 | 5.84 | - | - | - | 3.2 | 12.0 | 13.3 | 780 | 3390 | 4290 | 15.6 | 14.9 | 14.3 |
| | | 25+60+60 | 2.07 | 4.97 | 4.97 | - | - | - | 3.2 | 12.0 | 13.3 | 780 | 3390 | 4290 | 15.6 | 14.9 | 14.3 |
| | | 25+60+71 | 1.92 | 4.62 | 5.46 | - | - | - | 3.2 | 12.0 | 13.3 | 780 | 3390 | 4290 | 15.6 | 14.9 | 14.3 |
| | | 35+35+35 | 4.00 | 4.00 | 4.00 | - | - | - | 3.2 | 12.0 | 13.3 | 780 | 3420 | 4290 | 15.7 | 15.0 | 14.4 |
| | | 35+35+50 | 3.50 | 3.50 | 5.00 | - | - | - | 3.2 | 12.0 | 13.3 | 780 | 3410 | 4290 | 15.7 | 15.0 | 14.4 |
| | | 35+35+60 | 3.23 | 3.23 | 5.54 | - | - | - | 3.2 | 12.0 | 13.3 | 780 | 3400 | 4290 | 15.6 | 14.9 | 14.3 |
| | | 35+35+71 | 2.98 | 2.98 | 6.04 | - | - | - | 3.2 | 12.0 | 13.3 | 780 | 3390 | 4290 | 15.6 | 14.9 | 14.3 |
| | | 35+50+50 | 3.11 | 4.44 | 4.44 | - | - | - | 3.2 | 12.0 | 13.3 | 780 | 3400 | 4290 | 15.6 | 14.9 | 14.3 |
| | | 35+50+60 | 2.90 | 4.14 | 4.97 | - | - | - | 3.2 | 12.0 | 13.3 | 780 | 3390 | 4290 | 15.6 | 14.9 | 14.3 |
| | | 35+50+71 | 2.69 | 3.85 | 5.46 | - | - | - | 3.2 | 12.0 | 13.3 | 780 | 3390 | 4290 | 15.6 | 14.9 | 14.3 |
| | | 35+60+60 | 2.71 | 4.65 | 4.65 | - | - | - | 3.2 | 12.0 | 13.3 | 780 | 3390 | 4290 | 15.6 | 14.9 | 14.3 |
| | | 50+50+50 | 4.00 | 4.00 | 4.00 | - | - | - | 3.2 | 12.0 | 13.3 | 780 | 3390 | 4290 | 15.6 | 14.9 | 14.3 |
| | | 50+50+60 | 3.75 | 3.75 | 4.50 | - | - | - | 3.2 | 12.0 | 13.3 | 780 | 3380 | 4290 | 15.5 | 14.8 | 14.2 |
| | 4 room | 20+20+20+20 | 3.00 | 3.00 | 3.00 | 3.00 | - | - | 3.6 | 12.0 | 13.3 | 950 | 3270 | 3920 | 14.9 | 14.2 | 13.6 |
| | | 20+20+20+25 | 2.82 | 2.82 | 2.82 | 3.53 | - | - | 3.6 | 12.0 | 13.3 | 950 | 3270 | 3920 | 14.9 | 14.2 | 13.6 |
| | | 20+20+20+35 | 2.53 | 2.53 | 2.53 | 4.42 | - | - | 3.6 | 12.0 | 13.3 | 950 | 3270 | 3920 | 14.9 | 14.2 | 13.6 |
| | | 20+20+20+50 | 2.18 | 2.18 | 2.18 | 5.45 | - | - | 3.6 | 12.0 | 13.3 | 950 | 3260 | 3920 | 14.8 | 14.2 | 13.6 |
| | | 20+20+20+60 | 2.00 | 2.00 | 2.00 | 6.00 | - | - | 3.6 | 12.0 | 13.3 | 950 | 3250 | 3920 | 14.8 | 14.1 | 13.6 |
| | | 20+20+20+71 | 1.83 | 1.83 | 1.83 | 6.50 | - | - | 3.6 | 12.0 | 13.3 | 950 | 3250 | 3920 | 14.6 | 14.0 | 13.4 |
| | | 20+20+25+25 | 2.67 | 2.67 | 3.33 | 3.33 | - | - | 3.6 | 12.0 | 13.3 | 950 | 3270 | 3920 | 14.9 | 14.2 | 13.6 |
| | | 20+20+25+35 | 2.40 | 2.40 | 3.00 | 4.20 | - | - | 3.6 | 12.0 | 13.3 | 950 | 3260 | 3920 | 14.8 | 14.2 | 13.6 |
| | | 20+20+25+50 | 2.09 | 2.09 | 2.61 | 5.22 | - | - | 3.6 | 12.0 | 13.3 | 950 | 3260 | 3920 | 14.8 | 14.2 | 13.6 |
| | | 20+20+25+60 | 1.92 | 1.92 | 2.40 | 5.76 | - | - | 3.6 | 12.0 | 13.3 | 950 | 3250 | 3920 | 14.8 | 14.1 | 13.6 |
| | | 20+20+25+71 | 1.76 | 1.76 | 2.21 | 6.26 | - | - | 3.6 | 12.0 | 13.3 | 950 | 3250 | 3920 | 14.8 | 14.1 | 13.6 |
| | | 20+20+35+35 | 2.18 | 2.18 | 3.82 | 3.82 | - | - | 3.6 | 12.0 | 13.3 | 950 | 3260 | 3920 | 14.8 | 14.2 | 13.6 |
| | | 20+20+35+50 | 1.92 | 1.92 | 3.36 | 4.80 | - | - | 3.6 | 12.0 | 13.3 | 950 | 3250 | 3920 | 14.8 | 14.1 | 13.6 |
| | | 20+20+35+60 | 1.78 | 1.78 | 3.11 | 5.33 | - | - | 3.6 | 12.0 | 13.3 | 950 | 3250 | 3920 | 14.8 | 14.1 | 13.6 |
| | | 20+20+35+71 | 1.64 | 1.64 | 2.88 | 5.84 | - | - | 3.6 | 12.0 | 13.3 | 950 | 3240 | 3920 | 14.7 | 14.1 | 13.5 |
| | | 20+20+50+50 | 1.71 | 1.71 | 4.29 | 4.29 | - | - | 3.6 | 12.0 | 13.3 | 950 | 3240 | 3920 | 14.7 | 14.1 | 13.5 |
| | | 20+20+50+60 | 1.60 | 1.60 | 4.00 | 4.80 | - | - | 3.6 | 12.0 | 13.3 | 950 | 3240 | 3920 | 14.7 | 14.1 | 13.5 |
| | | 20+20+60+60 | 1.50 | 1.50 | 4.50 | 4.50 | - | - | 3.6 | 12.0 | 13.3 | 950 | 3240 | 3920 | 14.7 | 14.1 | 13.5 |
| | | 20+25+25+25 | 2.53 | 3.16 | 3.16 | 3.16 | - | - | 3.6 | 12.0 | 13.3 | 950 | 3270 | 3920 | 14.9 | 14.2 | 13.6 |
| | | 20+25+25+35 | 2.29 | 2.86 | 2.86 | 4.00 | - | - | 3.6 | 12.0 | 13.3 | 950 | 3260 | 3920 | 14.8 | 14.2 | 13.6 |
| | | 20+25+25+50 | 2.00 | 2.50 | 2.50 | 5.00 | - | - | 3.6 | 12.0 | 13.3 | 950 | 3250 | 3920 | 14.8 | 14.1 | 13.6 |
| | | 20+25+25+60 | 1.85 | 2.31 | 2.31 | 5.54 | - | - | 3.6 | 12.0 | 13.3 | 950 | 3250 | 3920 | 14.8 | 14.1 | 13.6 |
| | | 20+25+25+71 | 1.70 | 2.13 | 2.13 | 6.04 | - | - | 3.6 | 12.0 | 13.3 | 950 | 3240 | 3920 | 14.7 | 14.1 | 13.5 |
| | | 20+25+35+35 | 2.09 | 2.61 | 3.65 | 3.65 | - | - | 3.6 | 12.0 | 13.3 | 950 | 3260 | 3920 | 14.8 | 14.2 | 13.6 |
| | | 20+25+35+50 | 1.85 | 2.31 | 3.23 | 4.62 | - | - | 3.6 | 12.0 | 13.3 | 950 | 3250 | 3920 | 14.8 | 14.1 | 13.6 |
| | | 20+25+35+60 | 1.71 | 2.14 | 3.00 | 5.14 | - | - | 3.6 | 12.0 | 13.3 | 950 | 3240 | 3920 | 14.7 | 14.1 | 13.5 |
| | | 20+25+35+71 | 1.59 | 1.99 | 2.78 | 5.64 | - | - | 3.6 | 12.0 | 13.3 | 950 | 3240 | 3920 | 14.7 | 14.1 | 13.5 |
| | | 20+25+50+50 | 1.66 | 2.07 | 4.14 | 4.14 | - | - | 3.6 | 12.0 | 13.3 | 950 | 3240 | 3920 | 14.7 | 14.1 | 13.5 |
| | | 20+25+50+60 | 1.55 | 1.94 | 3.87 | 4.65 | - | - | 3.6 | 12.0 | 13.3 | 950 | 3240 | 3920 | 14.7 | 14.1 | 13.5 |
| | | 20+35+35+35 | 1.92 | 3.36 | 3.36 | 3.36 | - | - | 3.6 | 12.0 | 13.3 | 950 | 3250 | 3920 | 14.8 | 14.1 | 13.6 |
| | | 20+35+35+50 | 1.71 | 3.00 | 3.00 | 4.29 | - | - | 3.6 | 12.0 | 13.3 | 950 | 3240 | 3920 | 14.7 | 14.1 | 13.5 |
| | | 20+35+35+60 | 1.60 | 2.80 | 2.80 | 4.80 | - | - | 3.6 | 12.0 | 13.3 | 950 | 3240 | 3920 | 14.7 | 14.1 | 13.5 |
| | | 20+35+50+50 | 1.55 | 2.71 | 3.87 | 3.87 | - | - | 3.6 | 12.0 | 13.3 | 950 | 3240 | 3920 | 14.7 | 14.1 | 13.5 |
| | | 25+25+25+25 | 3.00 | 3.00 | 3.00 | 3.00 | - | - | 3.6 | 12.0 | 13.3 | 950 | 3260 | 3920 | 14.8 | 14.2 | 13.6 |
| | | 25+25+25+35 | 2.73 | 2.73 | 2.73 | 3.82 | - | - | 3.6 | 12.0 | 13.3 | 950 | 3260 | 3920 | 14.8 | 14.2 | 13.6 |
| | | 25+25+25+50 | 2.40 | 2.40 | 2.40 | 4.80 | - | - | 3.6 | 12.0 | 13.3 | 950 | 3250 | 3920 | 14.8 | 14.1 | 13.6 |
| | | 25+25+25+60 | 2.22 | 2.22 | 2.22 | 5.33 | - | - | 3.6 | 12.0 | 13.3 | 950 | 3250 | 3920 | 14.8 | 14.1 | 13.6 |
| | | 25+25+25+71 | 2.05 | 2.05 | 2.05 | 5.84 | - | - | 3.6 | 12.0 | 13.3 | 950 | 3240 | 3920 | 14.7 | 14.1 | 13.5 |
| | | 25+25+35+35 | 2.50 | 2.50 | 3.50 | 3.50 | - | - | 3.6 | 12.0 | 13.3 | 950 | 3250 | 3920 | 14.8 | 14.1 | 13.6 |
| | | 25+25+35+50 | 2.22 | 2.22 | 3.11 | 4.44 | - | - | 3.6 | 12.0 | 13.3 | 950 | 3250 | 3920 | 14.8 | 14.1 | 13.6 |
| | | 25+25+35+60 | 2.07 | 2.07 | 2.90 | 4.97 | - | - | 3.6 | 12.0 | 13.3 | 950 | 3240 | 3920 | 14.7 | 14.1 | 13.5 |
| | | 25+25+35+71 | 1.92 | 1.92 | 2.69 | 5.46 | - | - | 3.6 | 12.0 | 13.3 | 950 | 3240 | 3920 | 14.7 | 14.1 | 13.5 |
| | | 25+25+50+50 | 2.00 | 2.00 | 4.00 | 4.00 | - | - | 3.6 | 12.0 | 13.3 | 950 | 3240 | 3920 | 14.7 | 14.1 | 13.5 |
| | | 25+25+50+60 | 1.88 | 1.88 | 3.75 | 4.50 | - | - | 3.6 | 12.0 | 13.3 | 950 | 3240 | 3920 | 14.7 | 14.1 | 13.5 |
| | | 25+35+35+35 | 2.31 | 3.23 | 3.23 | 3.23 | - | - | 3.6 | 12.0 | 13.3 | 950 | 3250 | 3920 | 14.8 | 14.1 | 13.6 |
| | | 25+35+35+50 | 2.07 | 2.90 | 2.90 | 4.14 | - | - | 3.6 | 12.0 | 13.3 | 950 | 3240 | 3920 | 14.7 | 14.1 | 13.5 |
| | | 25+35+35+60 | 1.94 | 2.71 | 2.71 | 4.65 | - | - | 3.6 | 12.0 | 13.3 | 950 | 3240 | 3920 | 14.7 | 14.1 | 13.5 |
| | | 25+35+50+50 | 1.88 | 2.63 | 3.75 | 3.75 | - | - | 3.6 | 12.0 | 13.3 | 950 | 3240 | 3920 | 14.7 | 14.1 | 13.5 |
| | | 35+35+35+35 | 3.00 | 3.00 | 3.00 | 3.00 | - | - | 3.6 | 12.0 | 13.3 | 950 | 3240 | 3920 | 14.7 | 14.1 | 13.5 |
| | | 35+35+35+50 | 2.71 | 2.71 | 2.71 | 3.87 | - | - | 3.6 | 12.0 | 13.3 | 950 | 3240 | 3920 | 14.7 | 14.1 | 13.5 |
| | 5 room | 20+20+20+20+20 | 2.40 | 2.40 | 2.40 | 2.40 | 2.40 | - | 4.0 | 12.0 | 13.3 | 1050 | 3220 | 3620 | 14.7 | 14.0 | 13.4 |
| | | 20+20+20+20+25 | 2.29 | 2.29 | 2.29 | 2.29 | 2.86 | - | 4.0 | 12.0 | 13.3 | 1050 | 3220 | 3620 | 14.7 | 14.0 | 13.4 |
| | | 20+20+20+20+35 | 2.09 | 2.09 | 2.09 | 2.09 | 3.65 | - | 4.0 | 12.0 | 13.3 | 1050 | 3210 | 3620 | 14.6 | 14.0 | 13.4 |
| | | 20+20+20+20+50 | 1.85 | 1.85 | 1.85 | 1.85 | 4.62 | - | 4.0 | 12.0 | 13.3 | 1050 | 3200 | 3620 | 14.6 | 13.9 | 13.3 |
| | | 20+20+20+20+60 | 1.71 | 1.71 | 1.71 | 1.71 | 5.14 | - | 4.0 | 12.0 | 13.3 | 1050 | 3200 | 3620 | 14.6 | 13.9 | 13.3 |
| | | 20+20+20+20+71 | 1.59 | 1.59 | 1.59 | 1.59 | 5.64 | - | 4.0 | 12.0 | 13.3 | 1050 | 3190 | 3620 | 14.5 | 13.9 | 13.3 |
| | | 20+20+20+25+25 | 2.18 | 2.18 | 2.18 | 2.73 | 2.73 | - | 4.0 | 12.0 | 13.3 | 1050 | 3210 | 3620 | 14.6 | 14.0 | 13.4 |
| | | 20+20+20+25+35 | 2.00 | 2.00 | 2.00 | 2.50 | 3.50 | - | 4.0 | 12.0 | 13.3 | 1050 | 3210 | 3620 | 14.6 | 14.0 | 13.4 |
| | | 20+20+20+25+50 | 1.78 | 1.78 | 1.78 | 2.22 | 4.44 | - | 4.0 | 12.0 | 13.3 | 1050 | 3200 | 3620 | 14.6 | 13.9 | 13.3 |
| | | 20+20+20+25+60 | 1.66 | 1.66 | 1.66 | 2.07 | 4.97 | - | 4.0 | 12.0 | 13.3 | 1050 | 3200 | 3620 | 14.6 | 13.9 | 13.3 |
| | | 20+20+20+25+71 | 1.54 | 1.54 | 1.54 | 1.92 | 5.46 | - | 4.0 | 12.0 | 13.3 | 1050 | 3190 | 3620 | 14.5 | 13.9 | 13.3 |
| | | 20+20+20+35+35 | 1.85 | 1.85 | 1.85 | 3.23 | 3.23 | - | 4.0 | 12.0 | 13.3 | 1050 | 3200 | 3620 | 14.6 | 13.9 | 13.3 |
| | | 20+20+20+35+50 | 1.66 | 1.66 | 1.66 | 2.90 | 4.14 | - | 4.0 | 12.0 | 13.3 | 1050 | 3200 | 3620 | 14.6 | 13.9 | 13.3 |
| | | 20+20+20+35+60 | 1.55 | 1.55 | 1.55 | 2.71 | 4.65 | - | 4.0 | 12.0 | 13.3 | 1050 | 3190 | 3620 | 14.5 | 13.9 | 13.3 |

R410A

# MULTI-SPLIT SYSTEM

| Indoor unit combination | | | Heating capacity (kW) | | | | | | | | | Power consumption(W) | | | Standard current(A) | | |
|---|---|---|---|---|---|---|---|---|---|---|---|---|---|---|---|---|---|
| | | | Room heating capacity | | | | | | Total capacity | | | Min. | Standard | Max. | 220V | 230V | 240V |
| | | | A | B | C | D | E | F | Min. | Standard | Max. | | | | | | |
| Heating operation | 5 room | 20+20+20+50+50 | 1.50 | 1.50 | 1.50 | 3.75 | 3.75 | - | 4.0 | 12.0 | 13.3 | 1050 | 3190 | 3620 | 14.5 | 13.9 | 13.3 |
| | | 20+20+25+25+25 | 2.09 | 2.09 | 2.61 | 2.61 | 2.61 | - | 4.0 | 12.0 | 13.3 | 1050 | 3210 | 3620 | 14.6 | 14.0 | 13.4 |
| | | 20+20+25+25+35 | 1.92 | 1.92 | 2.40 | 2.40 | 3.36 | - | 4.0 | 12.0 | 13.3 | 1050 | 3210 | 3620 | 14.6 | 14.0 | 13.4 |
| | | 20+20+25+25+50 | 1.71 | 1.71 | 2.14 | 2.14 | 4.29 | - | 4.0 | 12.0 | 13.3 | 1050 | 3200 | 3620 | 14.6 | 13.9 | 13.3 |
| | | 20+20+25+25+60 | 1.60 | 1.60 | 2.00 | 2.00 | 4.80 | - | 4.0 | 12.0 | 13.3 | 1050 | 3190 | 3620 | 14.5 | 13.9 | 13.3 |
| | | 20+20+25+35+35 | 1.78 | 1.78 | 2.22 | 3.11 | 3.11 | - | 4.0 | 12.0 | 13.3 | 1050 | 3200 | 3620 | 14.6 | 13.9 | 13.3 |
| | | 20+20+25+35+50 | 1.60 | 1.60 | 2.00 | 2.80 | 4.00 | - | 4.0 | 12.0 | 13.3 | 1050 | 3190 | 3620 | 14.5 | 13.9 | 13.3 |
| | | 20+20+25+35+60 | 1.50 | 1.50 | 1.88 | 2.63 | 4.50 | - | 4.0 | 12.0 | 13.3 | 1050 | 3190 | 3620 | 14.5 | 13.9 | 13.3 |
| | | 20+20+35+35+35 | 1.66 | 1.66 | 2.90 | 2.90 | 2.90 | - | 4.0 | 12.0 | 13.3 | 1050 | 3200 | 3620 | 14.6 | 13.9 | 13.3 |
| | | 20+20+35+35+50 | 1.50 | 1.50 | 2.63 | 2.63 | 3.75 | - | 4.0 | 12.0 | 13.3 | 1050 | 3190 | 3620 | 14.5 | 13.9 | 13.3 |
| | | 20+25+25+25+25 | 2.00 | 2.50 | 2.50 | 2.50 | 2.50 | - | 4.0 | 12.0 | 13.3 | 1050 | 3210 | 3620 | 14.6 | 14.0 | 13.4 |
| | | 20+25+25+25+35 | 1.85 | 2.31 | 2.31 | 2.31 | 3.23 | - | 4.0 | 12.0 | 13.3 | 1050 | 3200 | 3620 | 14.6 | 13.9 | 13.3 |
| | | 20+25+25+25+50 | 1.66 | 2.07 | 2.07 | 2.07 | 4.14 | - | 4.0 | 12.0 | 13.3 | 1050 | 3200 | 3620 | 14.6 | 13.9 | 13.3 |
| | | 20+25+25+25+60 | 1.55 | 1.94 | 1.94 | 1.94 | 4.65 | - | 4.0 | 12.0 | 13.3 | 1050 | 3190 | 3620 | 14.5 | 13.9 | 13.3 |
| | | 20+25+25+35+35 | 1.71 | 2.14 | 2.14 | 3.00 | 3.00 | - | 4.0 | 12.0 | 13.3 | 1050 | 3200 | 3620 | 14.6 | 13.9 | 13.3 |
| | | 20+25+25+35+50 | 1.55 | 1.94 | 1.94 | 2.71 | 3.87 | - | 4.0 | 12.0 | 13.3 | 1050 | 3190 | 3620 | 14.5 | 13.9 | 13.3 |
| | | 20+25+35+35+35 | 1.60 | 2.00 | 2.80 | 2.80 | 2.80 | - | 4.0 | 12.0 | 13.3 | 1050 | 3190 | 3620 | 14.5 | 13.9 | 13.3 |
| | | 20+35+35+35+35 | 1.50 | 2.63 | 2.63 | 2.63 | 2.63 | - | 4.0 | 12.0 | 13.3 | 1050 | 3190 | 3620 | 14.5 | 13.9 | 13.3 |
| | | 25+25+25+25+25 | 2.40 | 2.40 | 2.40 | 2.40 | 2.40 | - | 4.0 | 12.0 | 13.3 | 1050 | 3210 | 3620 | 14.6 | 14.0 | 13.4 |
| | | 25+25+25+25+35 | 2.22 | 2.22 | 2.22 | 2.22 | 3.11 | - | 4.0 | 12.0 | 13.3 | 1050 | 3200 | 3620 | 14.6 | 13.9 | 13.3 |
| | | 25+25+25+25+50 | 2.00 | 2.00 | 2.00 | 2.00 | 4.00 | - | 4.0 | 12.0 | 13.3 | 1050 | 3190 | 3620 | 14.5 | 13.9 | 13.3 |
| | | 25+25+25+25+60 | 1.88 | 1.88 | 1.88 | 1.88 | 4.50 | - | 4.0 | 12.0 | 13.3 | 1050 | 3190 | 3620 | 14.5 | 13.9 | 13.3 |
| | | 25+25+25+35+35 | 2.07 | 2.07 | 2.07 | 2.90 | 2.90 | - | 4.0 | 12.0 | 13.3 | 1050 | 3200 | 3620 | 14.6 | 13.9 | 13.3 |
| | | 25+25+25+35+50 | 1.88 | 1.88 | 1.88 | 2.63 | 3.75 | - | 4.0 | 12.0 | 13.3 | 1050 | 3190 | 3620 | 14.5 | 13.9 | 13.3 |
| | | 25+25+35+35+35 | 1.94 | 1.94 | 2.71 | 2.71 | 2.71 | - | 4.0 | 12.0 | 13.3 | 1050 | 3190 | 3620 | 14.5 | 13.9 | 13.3 |

| Indoor unit combination | | | Cooling capacity (kW) | | | | | | | | | Power consumption(W) | | | Standard current(A) | | |
|---|---|---|---|---|---|---|---|---|---|---|---|---|---|---|---|---|---|
| | | | Room cooling capacity | | | | | | Total capacity | | | Min. | Standard | Max. | 220V | 230V | 240V |
| | | | A | B | C | D | E | F | Min. | Standard | Max. | | | | | | |
| Cooling operation | 1 room | 20 | 2.0 | - | - | - | - | - | 1.8 | 2.0 | 2.7 | 650 | 780 | 1100 | 3.6 | 3.4 | 3.3 |
| | | 25 | 2.5 | - | - | - | - | - | 1.8 | 2.5 | 3.2 | 650 | 1000 | 1350 | 4.6 | 4.4 | 4.2 |
| | | 35 | 3.5 | - | - | - | - | - | 1.8 | 3.5 | 3.7 | 650 | 1500 | 1600 | 6.9 | 6.6 | 6.3 |
| | | 50 | 5.0 | - | - | - | - | - | 1.8 | 5.0 | 5.8 | 650 | 2150 | 2500 | 9.9 | 9.4 | 9.0 |
| | | 60 | 6.0 | - | - | - | - | - | 1.8 | 6.0 | 6.7 | 650 | 2720 | 3000 | 12.5 | 11.9 | 11.4 |
| | | 71 | 7.1 | - | - | - | - | - | 1.8 | 7.1 | 7.2 | 650 | 3250 | 3080 | 14.9 | 14.3 | 13.7 |
| | 2 room | 20+20 | 2.00 | 2.00 | - | - | - | - | 3.0 | 4.0 | 5.4 | 740 | 960 | 1460 | 4.4 | 4.2 | 4.0 |
| | | 20+25 | 2.00 | 2.50 | - | - | - | - | 3.0 | 4.5 | 5.9 | 740 | 1100 | 1820 | 5.1 | 4.8 | 4.6 |
| | | 20+35 | 2.00 | 3.50 | - | - | - | - | 3.0 | 5.5 | 6.4 | 740 | 1500 | 2020 | 6.9 | 6.6 | 6.3 |
| | | 20+50 | 2.00 | 5.00 | - | - | - | - | 3.0 | 7.0 | 8.5 | 740 | 2290 | 2820 | 10.5 | 10.1 | 9.6 |
| | | 20+60 | 2.00 | 6.00 | - | - | - | - | 3.0 | 8.0 | 9.4 | 740 | 2660 | 3360 | 12.2 | 11.7 | 11.2 |
| | | 20+71 | 2.00 | 7.10 | - | - | - | - | 3.0 | 9.1 | 9.9 | 740 | 3100 | 3780 | 14.1 | 13.5 | 12.9 |
| | | 25+25 | 2.50 | 2.50 | - | - | - | - | 3.0 | 5.0 | 6.8 | 740 | 1420 | 2200 | 6.5 | 6.2 | 6.0 |
| | | 25+35 | 2.50 | 3.50 | - | - | - | - | 3.0 | 6.0 | 6.9 | 740 | 1810 | 2320 | 8.3 | 7.9 | 7.6 |
| | | 25+50 | 2.50 | 5.00 | - | - | - | - | 3.0 | 7.5 | 9.0 | 740 | 2470 | 3220 | 11.3 | 10.8 | 10.4 |
| | | 25+60 | 2.50 | 6.00 | - | - | - | - | 3.0 | 8.5 | 9.4 | 740 | 2810 | 3360 | 12.9 | 12.3 | 11.8 |
| | | 25+71 | 2.53 | 7.17 | | | | | 3.0 | 9.7 | 10.4 | 740 | 3350 | 4020 | 15.4 | 14.7 | 14.1 |
| | | 35+35 | 3.50 | 3.50 | - | - | - | - | 3.0 | 7.0 | 7.4 | 740 | 2290 | 2820 | 10.5 | 10.1 | 9.6 |
| | | 35+50 | 3.50 | 5.00 | - | - | - | - | 3.0 | 8.5 | 9.5 | 740 | 2810 | 3620 | 12.9 | 12.3 | 11.8 |
| | | 35+60 | 3.50 | 6.00 | - | - | - | - | 3.0 | 9.5 | 10.4 | 740 | 3280 | 3990 | 15.1 | 14.4 | 13.8 |
| | | 35+71 | 3.30 | 6.70 | - | - | - | - | 3.0 | 10.0 | 10.9 | 740 | 3480 | 4250 | 15.8 | 15.1 | 14.5 |
| | | 50+50 | 5.00 | 5.00 | - | - | - | - | 3.0 | 10.0 | 11.6 | 740 | 3480 | 4350 | 16.0 | 15.3 | 14.6 |
| | | 50+60 | 4.55 | 5.45 | - | - | - | - | 3.0 | 10.0 | 11.8 | 740 | 3480 | 4410 | 16.0 | 15.3 | 14.6 |
| | | 50+71 | 4.13 | 5.87 | - | - | - | - | 3.0 | 10.0 | 11.8 | 740 | 3470 | 4410 | 15.8 | 15.1 | 14.5 |
| | | 60+60 | 5.00 | 5.00 | - | - | - | - | 3.0 | 10.0 | 11.8 | 740 | 3470 | 4410 | 15.9 | 15.2 | 14.6 |
| | | 60+71 | 4.58 | 5.42 | - | - | - | - | 3.0 | 10.0 | 11.8 | 740 | 3470 | 4410 | 15.8 | 15.1 | 14.5 |
| | | 71+71 | 5.00 | 5.00 | - | - | - | - | 3.0 | 10.0 | 11.8 | 740 | 3460 | 4410 | 15.6 | 14.9 | 14.3 |
| | 3 room | 20+20+20 | 2.00 | 2.00 | 2.00 | - | - | - | 3.7 | 6.0 | 8.1 | 880 | 1530 | 2490 | 7.0 | 6.7 | 6.4 |
| | | 20+20+25 | 2.00 | 2.00 | 2.50 | - | - | - | 3.7 | 6.5 | 8.6 | 880 | 1730 | 2700 | 7.9 | 7.6 | 7.3 |
| | | 20+20+35 | 2.00 | 2.00 | 3.50 | - | - | - | 3.7 | 7.5 | 9.1 | 880 | 2080 | 3120 | 9.6 | 9.1 | 8.8 |
| | | 20+20+50 | 2.00 | 2.00 | 5.00 | - | - | - | 3.7 | 9.0 | 11.2 | 880 | 2730 | 4000 | 12.5 | 12.0 | 11.5 |
| | | 20+20+60 | 2.00 | 2.00 | 6.00 | - | - | - | 3.7 | 10.0 | 11.8 | 880 | 3280 | 4250 | 15.1 | 14.4 | 13.8 |
| | | 20+20+71 | 1.80 | 1.80 | 6.40 | - | - | - | 3.7 | 10.0 | 11.8 | 880 | 3280 | 4250 | 15.1 | 14.4 | 13.8 |
| | | 20+25+25 | 2.00 | 2.50 | 2.50 | - | - | - | 3.7 | 7.0 | 9.1 | 880 | 1940 | 3210 | 8.9 | 8.5 | 8.2 |
| | | 20+25+35 | 2.00 | 2.50 | 3.50 | - | - | - | 3.7 | 8.0 | 9.6 | 880 | 2440 | 3630 | 11.2 | 10.7 | 10.3 |
| | | 20+25+50 | 2.00 | 2.50 | 5.00 | - | - | - | 3.7 | 9.5 | 11.5 | 880 | 3130 | 4120 | 14.4 | 13.7 | 13.2 |
| | | 20+25+60 | 1.90 | 2.38 | 5.71 | - | - | - | 3.7 | 10.0 | 11.8 | 880 | 3280 | 4250 | 15.1 | 14.4 | 13.8 |
| | | 20+25+71 | 1.72 | 2.16 | 6.12 | - | - | - | 3.7 | 10.0 | 11.8 | 880 | 3280 | 4250 | 15.1 | 14.4 | 13.8 |
| | | 20+35+35 | 2.00 | 3.50 | 3.50 | - | - | - | 3.7 | 9.0 | 10.1 | 880 | 2920 | 3640 | 13.4 | 12.8 | 12.3 |
| | | 20+35+50 | 1.90 | 3.33 | 4.76 | - | - | - | 3.7 | 10.0 | 11.8 | 880 | 3280 | 4250 | 15.1 | 14.4 | 13.8 |
| | | 20+35+60 | 1.74 | 3.04 | 5.22 | - | - | - | 3.7 | 10.0 | 11.8 | 880 | 3280 | 4250 | 15.1 | 14.4 | 13.8 |
| | | 20+35+71 | 1.59 | 2.78 | 5.63 | - | - | - | 4.7 | 10.0 | 11.8 | 880 | 3270 | 4250 | 15.0 | 14.4 | 13.8 |
| | | 20+50+50 | 1.67 | 4.17 | 4.17 | - | - | - | 3.7 | 10.0 | 11.8 | 880 | 3270 | 4250 | 15.0 | 14.4 | 13.8 |
| | | 20+50+60 | 1.54 | 3.85 | 4.62 | - | - | - | 3.7 | 10.0 | 11.8 | 880 | 3270 | 4250 | 15.0 | 14.4 | 13.8 |
| | | 20+50+71 | 1.42 | 3.55 | 5.04 | - | - | - | 3.7 | 10.0 | 11.8 | 880 | 3260 | 4250 | 15.0 | 14.3 | 13.7 |
| | | 20+60+60 | 1.43 | 4.29 | 4.29 | - | - | - | 3.7 | 10.0 | 11.8 | 880 | 3260 | 4250 | 15.0 | 14.3 | 13.7 |
| | | 20+60+71 | 1.32 | 3.97 | 4.70 | - | - | - | 3.7 | 10.0 | 11.8 | 880 | 3260 | 4250 | 15.0 | 14.3 | 13.7 |
| | | 25+25+25 | 2.50 | 2.50 | 2.50 | - | - | - | 3.7 | 7.5 | 9.4 | 880 | 2130 | 3340 | 9.8 | 9.4 | 9.0 |

| Indoor unit combination | | | Cooling capacity (kW) | | | | | | | | | Power consumption(W) | | | Standard current(A) | | |
|---|---|---|---|---|---|---|---|---|---|---|---|---|---|---|---|---|---|
| | | | Room cooling capacity | | | | | | Total capacity | | | | | | | | |
| | | | A | B | C | D | E | F | Min. | Standard | Max. | Min. | Standard | Max. | 220V | 230V | 240V |
| Cooling operation | 3 room | 25+25+35 | 2.50 | 2.50 | 3.50 | - | - | - | 3.7 | 8.5 | 9.9 | 880 | 2650 | 3540 | 12.2 | 11.6 | 11.2 |
| | | 25+25+50 | 2.50 | 2.50 | 5.00 | - | - | - | 3.7 | 10.0 | 11.8 | 880 | 3280 | 4250 | 15.1 | 14.4 | 13.8 |
| | | 25+25+60 | 2.27 | 2.27 | 5.45 | - | - | - | 3.7 | 10.0 | 11.8 | 880 | 3280 | 4250 | 15.1 | 14.4 | 13.8 |
| | | 25+25+71 | 2.07 | 2.07 | 5.87 | | | | 3.7 | 10.0 | 11.8 | 880 | 3270 | 4250 | 15.0 | 14.4 | 13.8 |
| | | 25+35+35 | 2.50 | 3.50 | 3.50 | - | - | - | 3.7 | 9.5 | 10.4 | 880 | 3130 | 3950 | 14.4 | 13.7 | 13.2 |
| | | 25+35+50 | 2.27 | 3.18 | 4.55 | - | - | - | 3.7 | 10.0 | 11.8 | 880 | 3280 | 4250 | 15.1 | 14.4 | 13.8 |
| | | 25+35+60 | 2.08 | 2.92 | 5.00 | - | - | - | 3.7 | 10.0 | 11.8 | 880 | 3270 | 4250 | 15.0 | 14.4 | 13.8 |
| | | 25+35+71 | 1.91 | 2.67 | 5.42 | | | | 3.7 | 10.0 | 11.8 | 880 | 3270 | 4250 | 15.0 | 14.4 | 13.8 |
| | | 25+50+50 | 2.00 | 4.00 | 4.00 | - | - | - | 3.7 | 10.0 | 11.8 | 880 | 3270 | 4250 | 15.0 | 14.4 | 13.8 |
| | | 25+50+60 | 1.85 | 3.70 | 4.44 | - | - | - | 3.7 | 10.0 | 11.8 | 880 | 3270 | 4250 | 15.0 | 14.4 | 13.8 |
| | | 25+50+71 | 1.71 | 3.42 | 4.86 | - | - | - | 3.7 | 10.0 | 11.8 | 880 | 3260 | 4250 | 21.4 | 20.5 | 19.7 |
| | | 25+60+60 | 1.72 | 4.14 | 4.14 | - | - | - | 3.7 | 10.0 | 11.8 | 880 | 3260 | 4250 | 21.4 | 20.5 | 19.7 |
| | | 25+60+71 | 1.60 | 3.85 | 4.55 | - | - | - | 3.7 | 10.0 | 11.8 | 880 | 3260 | 4250 | 21.4 | 20.5 | 19.7 |
| | | 35+35+35 | 3.33 | 3.33 | 3.33 | - | - | - | 3.7 | 10.0 | 10.9 | 880 | 3280 | 4120 | 15.1 | 14.4 | 13.8 |
| | | 35+35+50 | 2.92 | 2.92 | 4.17 | - | - | - | 3.7 | 10.0 | 11.8 | 880 | 3270 | 4250 | 15.0 | 14.4 | 13.8 |
| | | 35+35+60 | 2.69 | 2.69 | 4.62 | - | - | - | 3.7 | 10.0 | 11.8 | 880 | 3270 | 4250 | 15.0 | 14.4 | 13.8 |
| | | 35+35+71 | 2.48 | 2.48 | 5.04 | - | - | - | 3.7 | 10.0 | 11.8 | 880 | 3260 | 4250 | 14.8 | 14.2 | 13.6 |
| | | 35+50+50 | 2.59 | 3.70 | 3.70 | - | - | - | 3.7 | 10.0 | 11.8 | 880 | 3270 | 4250 | 15.0 | 14.4 | 13.8 |
| | | 35+50+60 | 2.41 | 3.45 | 4.14 | - | - | - | 3.7 | 10.0 | 11.8 | 880 | 3260 | 4250 | 15.0 | 14.3 | 13.7 |
| | | 35+50+71 | 2.24 | 3.21 | 4.55 | - | - | - | 3.7 | 10.0 | 11.8 | 880 | 3260 | 4250 | 15.0 | 14.3 | 13.7 |
| | | 35+60+60 | 2.26 | 3.87 | 3.87 | - | - | - | 3.7 | 10.0 | 11.8 | 880 | 3260 | 4250 | 15.0 | 14.3 | 13.7 |
| | | 50+50+50 | 3.33 | 3.33 | 3.33 | - | - | - | 3.7 | 10.0 | 11.8 | 880 | 3260 | 4250 | 15.0 | 14.3 | 13.7 |
| | | 50+50+60 | 3.13 | 3.13 | 3.75 | - | - | - | 3.7 | 10.0 | 11.8 | 880 | 3260 | 4250 | 15.0 | 14.3 | 13.7 |
| | 4 room | 20+20+20+20 | 2.00 | 2.00 | 2.00 | 2.00 | - | - | 4.4 | 8.0 | 10.8 | 1100 | 2110 | 3680 | 9.6 | 9.2 | 8.8 |
| | | 20+20+20+25 | 2.00 | 2.00 | 2.00 | 2.50 | - | - | 4.4 | 8.5 | 11.1 | 1100 | 2390 | 3890 | 10.9 | 10.4 | 10.0 |
| | | 20+20+20+35 | 2.00 | 2.00 | 2.00 | 3.50 | - | - | 4.4 | 9.5 | 11.6 | 1100 | 2900 | 3990 | 13.2 | 12.6 | 12.1 |
| | | 20+20+20+50 | 1.82 | 1.82 | 1.82 | 4.55 | - | - | 4.4 | 10.0 | 11.8 | 1100 | 3210 | 4050 | 14.6 | 14.0 | 13.4 |
| | | 20+20+20+60 | 1.67 | 1.67 | 1.67 | 5.00 | - | - | 4.4 | 10.0 | 11.8 | 1100 | 3210 | 4050 | 14.6 | 14.0 | 13.4 |
| | | 20+20+20+71 | 1.53 | 1.53 | 1.53 | 5.42 | - | - | 4.4 | 10.0 | 11.8 | 1100 | 3200 | 4050 | 14.4 | 13.8 | 13.2 |
| | | 20+20+25+25 | 2.00 | 2.00 | 2.50 | 2.50 | - | - | 4.4 | 9.0 | 11.6 | 1100 | 2600 | 3990 | 11.8 | 11.3 | 10.8 |
| | | 20+20+25+35 | 2.00 | 2.00 | 2.50 | 3.50 | - | - | 4.4 | 10.0 | 11.8 | 1100 | 3220 | 4050 | 14.7 | 14.0 | 13.4 |
| | | 20+20+25+50 | 1.74 | 1.74 | 2.17 | 4.35 | - | - | 4.4 | 10.0 | 11.8 | 1100 | 3210 | 4050 | 14.6 | 14.0 | 13.4 |
| | | 20+20+25+60 | 1.60 | 1.60 | 2.00 | 4.80 | - | - | 4.4 | 10.0 | 11.8 | 1100 | 3210 | 4050 | 14.6 | 14.0 | 13.4 |
| | | 20+20+25+71 | 1.47 | 1.47 | 1.84 | 5.22 | - | - | 4.4 | 10.0 | 11.8 | 1100 | 3200 | 4050 | 14.6 | 13.9 | 13.3 |
| | | 20+20+35+35 | 1.82 | 1.82 | 3.18 | 3.18 | - | - | 4.4 | 10.0 | 11.8 | 1100 | 3210 | 4050 | 14.6 | 14.0 | 13.4 |
| | | 20+20+35+50 | 1.60 | 1.60 | 2.80 | 4.00 | - | - | 4.4 | 10.0 | 11.8 | 1100 | 3210 | 4050 | 14.6 | 14.0 | 13.4 |
| | | 20+20+35+60 | 1.48 | 1.48 | 2.59 | 4.44 | - | - | 4.4 | 10.0 | 11.8 | 1100 | 3200 | 4050 | 14.6 | 13.9 | 13.3 |
| | | 20+20+35+71 | 1.37 | 1.37 | 2.40 | 4.86 | - | - | 4.4 | 10.0 | 11.8 | 1100 | 3190 | 4050 | 14.5 | 13.9 | 13.3 |
| | | 20+20+50+50 | 1.43 | 1.43 | 3.57 | 3.57 | - | - | 4.4 | 10.0 | 11.8 | 1100 | 3190 | 4050 | 14.5 | 13.9 | 13.3 |
| | | 20+20+50+60 | 1.33 | 1.33 | 3.33 | 4.00 | - | - | 4.4 | 10.0 | 11.8 | 1100 | 3190 | 4050 | 14.5 | 13.9 | 13.3 |
| | | 20+20+60+60 | 1.25 | 1.25 | 3.75 | 3.75 | - | - | 4.4 | 10.0 | 11.8 | 1100 | 3180 | 4050 | 14.5 | 13.8 | 13.3 |
| | | 20+25+25+25 | 2.00 | 2.50 | 2.50 | 2.50 | - | - | 4.4 | 9.5 | 11.8 | 1100 | 2900 | 4050 | 13.2 | 12.6 | 12.1 |
| | | 20+25+25+35 | 1.90 | 2.38 | 2.38 | 3.33 | - | - | 4.4 | 10.0 | 11.8 | 1100 | 3220 | 4050 | 14.7 | 14.0 | 13.4 |
| | | 20+25+25+50 | 1.67 | 2.08 | 2.08 | 4.17 | - | - | 4.4 | 10.0 | 11.8 | 1100 | 3210 | 4050 | 14.6 | 14.0 | 13.4 |
| | | 20+25+25+60 | 1.54 | 1.92 | 1.92 | 4.62 | - | - | 4.4 | 10.0 | 11.8 | 1100 | 3200 | 4050 | 14.6 | 13.9 | 13.3 |
| | | 21+26+26+71 | 1.46 | 1.81 | 1.81 | 4.93 | - | - | 4.4 | 10.0 | 11.8 | 1100 | 3190 | 4050 | 14.5 | 13.9 | 13.3 |
| | | 20+25+35+35 | 1.74 | 2.17 | 3.04 | 3.04 | - | - | 4.4 | 10.0 | 11.8 | 1100 | 3210 | 4050 | 14.6 | 14.0 | 13.4 |
| | | 20+25+35+50 | 1.54 | 1.92 | 2.69 | 3.85 | - | - | 4.4 | 10.0 | 11.8 | 1100 | 3200 | 4050 | 14.6 | 13.9 | 13.3 |
| | | 20+25+35+60 | 1.43 | 1.79 | 2.50 | 4.29 | - | - | 4.4 | 10.0 | 11.8 | 1100 | 3190 | 4050 | 14.5 | 13.9 | 13.3 |
| | | 20+25+35+71 | 1.32 | 1.66 | 2.32 | 4.70 | | | 4.4 | 10.0 | 11.8 | 1100 | 3190 | 4050 | 14.5 | 13.9 | 13.3 |
| | | 20+25+50+50 | 1.38 | 1.72 | 3.45 | 3.45 | - | - | 4.4 | 10.0 | 11.8 | 1100 | 3190 | 4050 | 14.5 | 13.9 | 13.3 |
| | | 20+25+50+60 | 1.29 | 1.61 | 3.23 | 3.87 | - | - | 4.4 | 10.0 | 11.8 | 1100 | 3190 | 4050 | 14.5 | 13.9 | 13.3 |
| | | 20+35+35+35 | 1.60 | 2.80 | 2.80 | 2.80 | - | - | 4.4 | 10.0 | 11.8 | 1100 | 3210 | 4050 | 14.6 | 14.0 | 13.4 |
| | | 20+35+35+50 | 1.43 | 2.50 | 2.50 | 3.57 | - | - | 4.4 | 10.0 | 11.8 | 1100 | 3190 | 4050 | 14.5 | 13.9 | 13.3 |
| | | 20+35+35+60 | 1.33 | 2.33 | 2.33 | 4.00 | - | - | 4.4 | 10.0 | 11.8 | 1100 | 3190 | 4050 | 14.5 | 13.9 | 13.3 |
| | | 20+35+50+50 | 1.29 | 2.26 | 3.23 | 3.23 | - | - | 4.4 | 10.0 | 11.8 | 1100 | 3190 | 4050 | 14.5 | 13.9 | 13.3 |
| | | 25+25+25+25 | 2.50 | 2.50 | 2.50 | 2.50 | - | - | 4.4 | 10.0 | 11.8 | 1100 | 3220 | 4050 | 14.7 | 14.0 | 13.4 |
| | | 25+25+25+35 | 2.27 | 2.27 | 2.27 | 3.18 | - | - | 4.4 | 10.0 | 11.8 | 1100 | 3210 | 4050 | 14.6 | 14.0 | 13.4 |
| | | 25+25+25+50 | 2.00 | 2.00 | 2.00 | 4.00 | - | - | 4.4 | 10.0 | 11.8 | 1100 | 3210 | 4050 | 14.6 | 14.0 | 13.4 |
| | | 25+25+25+60 | 1.85 | 1.85 | 1.85 | 4.44 | - | - | 4.4 | 10.0 | 11.8 | 1100 | 3200 | 4050 | 14.6 | 13.9 | 13.3 |
| | | 25+25+25+71 | 1.71 | 1.71 | 1.71 | 4.86 | | | 4.4 | 10.0 | 11.8 | 1100 | 3190 | 4050 | 14.5 | 13.9 | 13.3 |
| | | 25+25+35+35 | 2.08 | 2.08 | 2.92 | 2.92 | - | - | 4.4 | 10.0 | 11.8 | 1100 | 3210 | 4050 | 14.6 | 14.0 | 13.4 |
| | | 25+25+35+50 | 1.85 | 1.85 | 2.59 | 3.70 | - | - | 4.4 | 10.0 | 11.8 | 1100 | 3200 | 4050 | 14.6 | 13.9 | 13.3 |
| | | 25+25+35+60 | 1.72 | 1.72 | 2.41 | 4.14 | | | 4.4 | 10.0 | 11.8 | 1100 | 3190 | 4050 | 14.5 | 13.9 | 13.3 |
| | | 25+25+35+71 | 1.60 | 1.60 | 2.24 | 4.55 | | | 4.4 | 10.0 | 11.8 | 1100 | 3190 | 4050 | 14.5 | 13.9 | 13.3 |
| | | 25+25+50+50 | 1.67 | 1.67 | 3.33 | 3.33 | - | - | 4.4 | 10.0 | 11.8 | 1100 | 3190 | 4050 | 14.5 | 13.9 | 13.3 |
| | | 25+25+50+60 | 1.56 | 1.56 | 3.13 | 3.75 | - | - | 4.4 | 10.0 | 11.8 | 1100 | 3180 | 4050 | 14.5 | 13.8 | 13.3 |
| | | 25+35+35+35 | 1.92 | 2.69 | 2.69 | 2.69 | - | - | 4.4 | 10.0 | 11.8 | 1100 | 3200 | 4050 | 14.6 | 13.9 | 13.3 |
| | | 25+35+35+50 | 1.72 | 2.41 | 2.41 | 3.45 | - | - | 4.4 | 10.0 | 11.8 | 1100 | 3190 | 4050 | 14.5 | 13.9 | 13.3 |
| | | 25+35+35+60 | 1.61 | 2.26 | 2.26 | 3.87 | - | - | 4.4 | 10.0 | 11.8 | 1100 | 3190 | 4050 | 14.5 | 13.9 | 13.3 |
| | | 25+35+50+50 | 1.56 | 2.19 | 3.13 | 3.13 | - | - | 4.4 | 10.0 | 11.8 | 1100 | 3180 | 4050 | 14.5 | 13.8 | 13.3 |
| | | 35+35+35+35 | 2.50 | 2.50 | 2.50 | 2.50 | - | - | 4.4 | 10.0 | 11.8 | 1100 | 3190 | 4050 | 14.5 | 13.9 | 13.3 |
| | | 35+35+35+50 | 2.26 | 2.26 | 2.26 | 3.23 | - | - | 4.4 | 10.0 | 11.8 | 1100 | 3190 | 4050 | 14.5 | 13.9 | 13.3 |
| | 5 room | 20+20+20+20+20 | 2.00 | 2.00 | 2.00 | 2.00 | 2.00 | - | 5.1 | 10.0 | 11.8 | 1210 | 2950 | 4030 | 13.4 | 12.8 | 12.3 |
| | | 20+20+20+20+25 | 1.90 | 1.90 | 1.90 | 1.90 | 2.38 | - | 5.1 | 10.0 | 11.8 | 1210 | 2950 | 4030 | 13.4 | 12.8 | 12.3 |
| | | 20+20+20+20+35 | 1.74 | 1.74 | 1.74 | 1.74 | 3.04 | - | 5.1 | 10.0 | 11.8 | 1210 | 2950 | 4030 | 13.4 | 12.8 | 12.3 |
| | | 20+20+20+20+50 | 1.54 | 1.54 | 1.54 | 1.54 | 3.85 | - | 5.1 | 10.0 | 11.8 | 1210 | 2940 | 4030 | 13.4 | 12.8 | 12.3 |

R410A

# MULTI-SPLIT SYSTEM

| Indoor unit combination | | | Cooling capacity (kW) | | | | | | | | | Power consumption(W) | | | Standard current(A) | | |
|---|---|---|---|---|---|---|---|---|---|---|---|---|---|---|---|---|---|
| | | | Room cooling capacity | | | | | | Total capacity | | | Min. | Standard | Max. | 220V | 230V | 240V |
| | | | A | B | C | D | E | F | Min. | Standard | Max. | | | | | | |
| Cooling operation | 5 room | 20+20+20+20+60 | 1.43 | 1.43 | 1.43 | 1.43 | 4.29 | - | 5.1 | 10.0 | 11.8 | 1210 | 2930 | 4030 | 13.3 | 12.8 | 12.2 |
| | | 20+20+20+20+71 | 1.32 | 1.32 | 1.32 | 1.32 | 4.70 | - | 5.1 | 10.0 | 11.8 | 1210 | 2930 | 4030 | 13.3 | 12.8 | 12.2 |
| | | 20+20+20+25+25 | 1.82 | 1.82 | 1.82 | 2.27 | 2.27 | - | 5.1 | 10.0 | 11.8 | 1210 | 2950 | 4030 | 13.4 | 12.8 | 12.3 |
| | | 20+20+20+25+35 | 1.67 | 1.67 | 1.67 | 2.08 | 2.92 | - | 5.1 | 10.0 | 11.8 | 1210 | 2940 | 4030 | 13.4 | 12.8 | 12.3 |
| | | 20+20+20+25+50 | 1.48 | 1.48 | 1.48 | 1.85 | 3.70 | - | 5.1 | 10.0 | 11.8 | 1210 | 2940 | 4030 | 13.4 | 12.8 | 12.3 |
| | | 20+20+20+25+60 | 1.38 | 1.38 | 1.38 | 1.72 | 4.14 | - | 5.1 | 10.0 | 11.8 | 1210 | 2930 | 4030 | 13.3 | 12.8 | 12.2 |
| | | 20+20+20+25+71 | 1.28 | 1.28 | 1.28 | 1.60 | 4.55 | - | 5.1 | 10.0 | 11.8 | 1210 | 2930 | 4030 | 13.3 | 12.8 | 12.2 |
| | | 20+20+20+35+35 | 1.54 | 1.54 | 1.54 | 2.69 | 2.69 | - | 5.1 | 10.0 | 11.8 | 1210 | 2940 | 4030 | 13.4 | 12.8 | 12.3 |
| | | 20+20+20+35+50 | 1.38 | 1.38 | 1.38 | 2.41 | 3.45 | - | 5.1 | 10.0 | 11.8 | 1210 | 2930 | 4030 | 13.3 | 12.8 | 12.2 |
| | | 20+20+20+35+60 | 1.29 | 1.29 | 1.29 | 2.26 | 3.87 | - | 5.1 | 10.0 | 11.8 | 1210 | 2930 | 4030 | 13.3 | 12.8 | 12.2 |
| | | 20+20+20+50+50 | 1.25 | 1.25 | 1.25 | 3.13 | 3.13 | - | 5.1 | 10.0 | 11.8 | 1210 | 2930 | 4030 | 13.3 | 12.8 | 12.2 |
| | | 20+20+25+25+25 | 1.74 | 1.74 | 2.17 | 2.17 | 2.17 | - | 5.1 | 10.0 | 11.8 | 1210 | 2950 | 4030 | 13.4 | 12.8 | 12.3 |
| | | 20+20+25+25+35 | 1.60 | 1.60 | 2.00 | 2.00 | 2.80 | - | 5.1 | 10.0 | 11.8 | 1210 | 2940 | 4030 | 13.4 | 12.8 | 12.3 |
| | | 20+20+25+25+50 | 1.43 | 1.43 | 1.79 | 1.79 | 3.57 | - | 5.1 | 10.0 | 11.8 | 1210 | 2930 | 4030 | 13.3 | 12.8 | 12.2 |
| | | 20+20+25+25+60 | 1.33 | 1.33 | 1.67 | 1.67 | 4.00 | - | 5.1 | 10.0 | 11.8 | 1210 | 2930 | 4030 | 13.3 | 12.8 | 12.2 |
| | | 20+20+25+35+35 | 1.48 | 1.48 | 1.85 | 2.59 | 2.59 | - | 5.1 | 10.0 | 11.8 | 1210 | 2940 | 4030 | 13.4 | 12.8 | 12.3 |
| | | 20+20+25+35+50 | 1.33 | 1.33 | 1.67 | 2.33 | 3.33 | - | 5.1 | 10.0 | 11.8 | 1210 | 2930 | 4030 | 13.3 | 12.8 | 12.2 |
| | | 20+20+25+35+60 | 1.25 | 1.25 | 1.56 | 2.19 | 3.75 | - | 5.1 | 10.0 | 11.8 | 1210 | 2930 | 4030 | 13.3 | 12.8 | 12.2 |
| | | 20+20+35+35+35 | 1.38 | 1.38 | 2.41 | 2.41 | 2.41 | - | 5.1 | 10.0 | 11.8 | 1210 | 2930 | 4030 | 13.3 | 12.8 | 12.2 |
| | | 20+20+35+35+50 | 1.25 | 1.25 | 2.19 | 2.19 | 3.13 | - | 5.1 | 10.0 | 11.8 | 1210 | 2930 | 4030 | 13.3 | 12.8 | 12.2 |
| | | 20+25+25+25+25 | 1.67 | 2.08 | 2.08 | 2.08 | 2.08 | - | 5.1 | 10.0 | 11.8 | 1210 | 2940 | 4030 | 13.4 | 12.8 | 12.3 |
| | | 20+25+25+25+35 | 1.54 | 1.92 | 1.92 | 1.92 | 2.69 | - | 5.1 | 10.0 | 11.8 | 1210 | 2940 | 4030 | 13.4 | 12.8 | 12.3 |
| | | 20+25+25+25+50 | 1.38 | 1.72 | 1.72 | 1.72 | 3.45 | - | 5.1 | 10.0 | 11.8 | 1210 | 2930 | 4030 | 13.3 | 12.8 | 12.2 |
| | | 20+25+25+25+60 | 1.29 | 1.61 | 1.61 | 1.61 | 3.87 | - | 5.1 | 10.0 | 11.8 | 1210 | 2930 | 4030 | 13.3 | 12.8 | 12.2 |
| | | 20+25+25+35+35 | 1.43 | 1.79 | 1.79 | 2.50 | 2.50 | - | 5.1 | 10.0 | 11.8 | 1210 | 2930 | 4030 | 13.3 | 12.8 | 12.2 |
| | | 20+25+25+35+50 | 1.29 | 1.61 | 1.61 | 2.26 | 3.23 | - | 5.1 | 10.0 | 11.8 | 1210 | 2930 | 4030 | 13.3 | 12.8 | 12.2 |
| | | 20+25+35+35+35 | 1.33 | 1.67 | 2.33 | 2.33 | 2.33 | - | 5.1 | 10.0 | 11.8 | 1210 | 2930 | 4030 | 13.3 | 12.8 | 12.2 |
| | | 20+35+35+35+35 | 1.25 | 2.19 | 2.19 | 2.19 | 2.19 | - | 5.1 | 10.0 | 11.8 | 1210 | 2930 | 4030 | 13.3 | 12.8 | 12.2 |
| | | 25+25+25+25+25 | 2.00 | 2.00 | 2.00 | 2.00 | 2.00 | - | 5.1 | 10.0 | 11.8 | 1210 | 2940 | 4030 | 13.4 | 12.8 | 12.3 |
| | | 25+25+25+25+35 | 1.85 | 1.85 | 1.85 | 1.85 | 2.59 | - | 5.1 | 10.0 | 11.8 | 1210 | 2940 | 4030 | 13.4 | 12.8 | 12.3 |
| | | 25+25+25+25+50 | 1.67 | 1.67 | 1.67 | 1.67 | 3.33 | - | 5.1 | 10.0 | 11.8 | 1210 | 2930 | 4030 | 13.3 | 12.8 | 12.2 |
| | | 25+25+25+25+60 | 1.56 | 1.56 | 1.56 | 1.56 | 3.75 | - | 5.1 | 10.0 | 11.8 | 1210 | 2930 | 4030 | 13.3 | 12.8 | 12.2 |
| | | 25+25+25+35+35 | 1.72 | 1.72 | 1.72 | 2.41 | 2.41 | - | 5.1 | 10.0 | 11.8 | 1210 | 2930 | 4030 | 13.3 | 12.8 | 12.2 |
| | | 25+25+25+35+50 | 1.56 | 1.56 | 1.56 | 2.19 | 3.13 | - | 5.1 | 10.0 | 11.8 | 1210 | 2930 | 4030 | 13.3 | 12.8 | 12.2 |
| | | 25+25+35+35+35 | 1.61 | 1.61 | 2.26 | 2.26 | 2.26 | - | 5.1 | 10.0 | 11.8 | 1210 | 2930 | 4030 | 13.3 | 12.8 | 12.2 |

## SCM125ZM-S Table of Indoor unit combination only with SRK-ZSX type

| Indoor unit combination | | | Heating capacity (kW) | | | | | | | | | Power consumption(W) | | | Standard current(A) | | |
|---|---|---|---|---|---|---|---|---|---|---|---|---|---|---|---|---|---|
| | | | Room heating capacity | | | | | | Total capacity | | | Min. | Standard | Max. | 220V | 230V | 240V |
| | | | A | B | C | D | E | F | Min. | Standard | Max. | | | | | | |
| Heating operation | 1 room | 20 | 3.0 | - | - | - | | | 1.5 | 3.0 | 3.7 | 700 | 1010 | 1330 | 4.6 | 4.4 | 4.3 |
| | | 25 | 3.4 | - | - | - | | | 1.5 | 3.4 | 4.2 | 700 | 1150 | 1540 | 5.3 | 5.1 | 4.8 |
| | | 35 | 4.5 | - | - | - | | | 1.5 | 4.5 | 5.0 | 700 | 1540 | 1840 | 7.1 | 6.8 | 6.5 |
| | | 50 | 5.8 | - | - | - | | | 1.5 | 5.8 | 6.5 | 700 | 2000 | 2410 | 9.2 | 8.8 | 8.4 |
| | | 60 | 6.8 | - | - | - | | | 1.5 | 6.8 | 7.5 | 700 | 2360 | 2760 | 10.8 | 10.4 | 9.9 |
| | 2 room | 20+20 | 3.00 | 3.00 | - | - | - | - | 2.1 | 6.0 | 7.4 | 750 | 1510 | 1460 | 6.9 | 6.6 | 6.4 |
| | | 20+25 | 2.84 | 3.56 | - | - | - | - | 2.1 | 6.4 | 7.9 | 750 | 1630 | 2210 | 7.5 | 7.2 | 6.9 |
| | | 20+35 | 2.73 | 4.77 | - | - | - | - | 2.1 | 7.5 | 8.7 | 750 | 1950 | 2520 | 9.0 | 8.6 | 8.2 |
| | | 20+50 | 2.51 | 6.29 | - | - | - | - | 2.1 | 8.8 | 10.2 | 750 | 2380 | 3220 | 10.9 | 10.5 | 10.0 |
| | | 20+60 | 2.45 | 7.35 | - | - | - | - | 2.1 | 9.8 | 11.2 | 750 | 2780 | 3620 | 12.8 | 12.2 | 11.7 |
| | | 25+25 | 3.40 | 3.40 | - | - | - | - | 2.1 | 6.8 | 8.4 | 750 | 1740 | 2420 | 8.0 | 7.6 | 7.3 |
| | | 25+35 | 3.29 | 4.61 | - | - | - | - | 2.1 | 7.9 | 9.2 | 750 | 2100 | 2820 | 9.6 | 9.2 | 8.8 |
| | | 25+50 | 3.07 | 6.13 | - | - | - | - | 2.1 | 9.2 | 10.7 | 750 | 2580 | 3610 | 11.8 | 11.3 | 10.9 |
| | | 25+60 | 3.00 | 7.20 | - | - | - | - | 2.1 | 10.2 | 11.7 | 750 | 2980 | 3790 | 13.7 | 13.1 | 12.5 |
| | | 35+35 | 4.50 | 4.50 | - | - | - | - | 2.1 | 9.0 | 10.0 | 750 | 2470 | 3210 | 11.3 | 10.8 | 10.4 |
| | | 35+50 | 4.24 | 6.06 | - | - | - | - | 2.1 | 10.3 | 11.5 | 750 | 2980 | 3710 | 13.7 | 13.1 | 12.5 |
| | | 35+60 | 4.16 | 7.14 | - | - | - | - | 2.1 | 11.3 | 12.5 | 750 | 3350 | 4320 | 15.4 | 14.7 | 14.1 |
| | | 50+50 | 5.80 | 5.80 | - | - | - | - | 2.1 | 11.6 | 13.0 | 750 | 3590 | 4620 | 16.5 | 15.8 | 15.1 |
| | | 50+60 | 5.73 | 6.87 | - | - | - | - | 2.1 | 12.6 | 14.0 | 750 | 4010 | 5230 | 18.4 | 17.6 | 16.9 |
| | | 60+60 | 6.75 | 6.75 | - | - | - | - | 2.1 | 13.5 | 14.0 | 750 | 4450 | 5230 | 20.4 | 19.5 | 18.7 |
| | 3 room | 20+20+20 | 3.00 | 3.00 | 3.00 | - | - | - | 3.2 | 9.0 | 11.1 | 780 | 2230 | 3350 | 10.2 | 9.8 | 9.4 |
| | | 20+20+25 | 2.89 | 2.89 | 3.62 | - | - | - | 3.2 | 9.4 | 11.6 | 780 | 2350 | 3550 | 10.8 | 10.3 | 9.9 |
| | | 20+20+35 | 2.80 | 2.80 | 4.90 | - | - | - | 3.2 | 10.5 | 12.4 | 780 | 2710 | 3820 | 12.4 | 11.9 | 11.4 |
| | | 20+20+50 | 2.62 | 2.62 | 6.56 | - | - | - | 3.2 | 11.8 | 13.9 | 780 | 3210 | 4290 | 14.7 | 14.1 | 13.5 |
| | | 20+20+60 | 2.56 | 2.56 | 7.68 | - | - | - | 3.2 | 12.8 | 14.0 | 780 | 3620 | 4350 | 16.6 | 15.9 | 15.2 |
| | | 20+25+25 | 2.80 | 3.50 | 3.50 | - | - | - | 3.2 | 9.8 | 12.1 | 780 | 2510 | 3720 | 11.5 | 11.0 | 10.6 |
| | | 20+25+35 | 2.73 | 3.41 | 4.77 | - | - | - | 3.2 | 10.9 | 12.9 | 780 | 2910 | 3990 | 13.4 | 12.8 | 12.2 |
| | | 20+25+50 | 2.57 | 3.21 | 6.42 | - | - | - | 3.2 | 12.2 | 14.0 | 780 | 3410 | 4350 | 15.7 | 15.0 | 14.4 |
| | | 20+25+60 | 2.51 | 3.14 | 7.54 | - | - | - | 3.2 | 13.2 | 14.0 | 780 | 3910 | 4350 | 18.0 | 17.2 | 16.5 |
| | | 20+35+35 | 2.67 | 4.67 | 4.67 | - | - | - | 3.2 | 12.0 | 13.7 | 780 | 3390 | 4220 | 15.6 | 14.9 | 14.3 |
| | | 20+35+50 | 2.53 | 4.43 | 6.33 | - | - | - | 3.2 | 13.3 | 14.0 | 780 | 3900 | 4350 | 17.9 | 17.1 | 16.4 |
| | | 20+35+60 | 2.35 | 4.11 | 7.04 | - | - | - | 3.2 | 13.5 | 14.0 | 780 | 4050 | 4350 | 18.6 | 17.8 | 17.0 |
| | | 20+50+50 | 2.25 | 5.63 | 5.63 | - | - | - | 3.2 | 13.5 | 14.0 | 780 | 4050 | 4350 | 18.6 | 17.8 | 17.0 |
| | | 20+50+60 | 2.08 | 5.19 | 6.23 | - | - | - | 3.2 | 13.5 | 14.0 | 780 | 4050 | 4350 | 18.6 | 17.8 | 17.0 |
| | | 20+60+60 | 1.93 | 5.79 | 5.79 | - | - | - | 3.2 | 13.5 | 14.0 | 780 | 4050 | 4350 | 18.6 | 17.8 | 17.0 |

| Indoor unit combination | | | Heating capacity (kW) | | | | | | | | | Power consumption(W) | | | Standard current(A) | | |
|---|---|---|---|---|---|---|---|---|---|---|---|---|---|---|---|---|---|
| | | | Room heating capacity | | | | | | Total capacity | | | | | | | | |
| | | | A | B | C | D | E | F | Min. | Standard | Max. | Min. | Standard | Max. | 220V | 230V | 240V |
| Heating operation | 3 room | 25+25+25 | 3.40 | 3.40 | 3.40 | - | - | - | 3.2 | 10.2 | 12.6 | 780 | 2710 | 3880 | 12.4 | 11.9 | 11.4 |
| | | 25+25+35 | 3.32 | 3.32 | 4.65 | - | - | - | 3.2 | 11.3 | 13.4 | 780 | 3110 | 4120 | 14.3 | 13.7 | 13.1 |
| | | 25+25+50 | 3.15 | 3.15 | 6.30 | - | - | - | 3.2 | 12.6 | 14.0 | 780 | 3620 | 4350 | 16.6 | 15.9 | 15.2 |
| | | 25+25+60 | 3.07 | 3.07 | 7.36 | - | - | - | 3.2 | 13.5 | 14.0 | 780 | 4050 | 4350 | 18.6 | 17.8 | 17.0 |
| | | 25+35+35 | 3.26 | 4.57 | 4.57 | - | - | - | 3.2 | 12.4 | 14.0 | 780 | 3710 | 4350 | 17.0 | 16.3 | 15.6 |
| | | 25+35+50 | 3.07 | 4.30 | 6.14 | - | - | - | 3.2 | 13.5 | 14.0 | 780 | 4060 | 4350 | 18.6 | 17.8 | 17.1 |
| | | 25+35+60 | 2.81 | 3.94 | 6.75 | - | - | - | 3.2 | 13.5 | 14.0 | 780 | 4060 | 4350 | 18.6 | 17.8 | 17.1 |
| | | 25+50+50 | 2.70 | 5.40 | 5.40 | - | - | - | 3.2 | 13.5 | 14.0 | 780 | 4050 | 4350 | 18.6 | 17.8 | 17.0 |
| | | 25+50+60 | 2.50 | 5.00 | 6.00 | - | - | - | 3.2 | 13.5 | 14.0 | 780 | 4050 | 4350 | 18.6 | 17.8 | 17.0 |
| | | 25+60+60 | 2.33 | 5.59 | 5.59 | - | - | - | 3.2 | 13.5 | 14.0 | 780 | 4050 | 4350 | 18.6 | 17.8 | 17.0 |
| | | 35+35+35 | 4.50 | 4.50 | 4.50 | - | - | - | 3.2 | 13.5 | 14.0 | 780 | 4060 | 4350 | 18.6 | 17.8 | 17.1 |
| | | 35+35+50 | 3.94 | 3.94 | 5.63 | - | - | - | 3.2 | 13.5 | 14.0 | 780 | 4060 | 4350 | 18.6 | 17.8 | 17.1 |
| | | 35+35+60 | 3.63 | 3.63 | 6.23 | - | - | - | 3.2 | 13.5 | 14.0 | 780 | 4050 | 4350 | 18.6 | 17.8 | 17.0 |
| | | 35+50+50 | 3.50 | 5.00 | 5.00 | - | - | - | 3.2 | 13.5 | 14.0 | 780 | 4050 | 4350 | 18.6 | 17.8 | 17.0 |
| | | 35+50+60 | 3.26 | 4.66 | 5.59 | - | - | - | 3.2 | 13.5 | 14.0 | 780 | 4050 | 4350 | 18.6 | 17.8 | 17.0 |
| | | 35+60+60 | 3.05 | 5.23 | 5.23 | - | - | - | 3.2 | 13.5 | 14.0 | 780 | 4050 | 4350 | 18.6 | 17.8 | 17.0 |
| | | 50+50+50 | 4.50 | 4.50 | 4.50 | - | - | - | 3.2 | 13.5 | 14.0 | 780 | 4040 | 4350 | 18.5 | 17.7 | 17.0 |
| | | 50+50+60 | 4.22 | 4.22 | 5.06 | - | - | - | 3.2 | 13.5 | 14.0 | 780 | 4040 | 4350 | 18.5 | 17.7 | 17.0 |
| | | 50+60+60 | 3.97 | 4.76 | 4.76 | - | - | - | 3.2 | 13.5 | 14.0 | 780 | 4040 | 4350 | 18.5 | 17.7 | 17.0 |
| | | 60+60+60 | 4.50 | 4.50 | 4.50 | - | - | - | 3.2 | 13.5 | 14.0 | 780 | 4030 | 4350 | 18.5 | 17.7 | 17.0 |
| | 4 room | 20+20+20+20 | 3.00 | 3.00 | 3.00 | 3.00 | - | - | 3.6 | 12.0 | 14.0 | 950 | 3210 | 3920 | 14.6 | 14.0 | 13.4 |
| | | 20+20+20+25 | 2.92 | 2.92 | 2.92 | 3.65 | - | - | 3.6 | 12.4 | 14.0 | 950 | 3390 | 3920 | 15.4 | 14.8 | 14.1 |
| | | 20+20+20+35 | 2.84 | 2.84 | 2.84 | 4.97 | - | - | 3.6 | 13.5 | 14.0 | 950 | 3700 | 3920 | 16.8 | 16.1 | 15.4 |
| | | 20+20+20+50 | 2.45 | 2.45 | 2.45 | 6.14 | - | - | 3.6 | 13.5 | 14.0 | 950 | 3690 | 3920 | 16.8 | 16.1 | 15.4 |
| | | 20+20+20+60 | 2.25 | 2.25 | 2.25 | 6.75 | - | - | 3.6 | 13.5 | 14.0 | 950 | 3690 | 3920 | 16.8 | 16.1 | 15.4 |
| | | 20+20+25+25 | 2.84 | 2.84 | 3.56 | 3.56 | - | - | 3.6 | 12.8 | 14.0 | 950 | 3440 | 3920 | 15.7 | 15.0 | 14.3 |
| | | 20+20+25+35 | 2.70 | 2.70 | 3.38 | 4.73 | - | - | 3.6 | 13.5 | 14.0 | 950 | 3700 | 3920 | 16.8 | 16.1 | 15.4 |
| | | 20+20+25+50 | 2.35 | 2.35 | 2.93 | 5.87 | - | - | 3.6 | 13.5 | 14.0 | 950 | 3690 | 3920 | 16.8 | 16.1 | 15.4 |
| | | 20+20+25+60 | 2.16 | 2.16 | 2.70 | 6.48 | - | - | 3.6 | 13.5 | 14.0 | 950 | 3680 | 3920 | 16.7 | 16.0 | 15.3 |
| | | 20+20+35+35 | 2.45 | 2.45 | 4.30 | 4.30 | - | - | 3.6 | 13.5 | 14.0 | 950 | 3690 | 3920 | 16.8 | 16.1 | 15.4 |
| | | 20+20+35+50 | 2.16 | 2.16 | 3.78 | 5.40 | - | - | 3.6 | 13.5 | 14.0 | 950 | 3680 | 3920 | 16.7 | 16.0 | 15.3 |
| | | 20+20+35+60 | 2.00 | 2.00 | 3.50 | 6.00 | - | - | 3.6 | 13.5 | 14.0 | 950 | 3680 | 3920 | 16.7 | 16.0 | 15.3 |
| | | 20+20+50+50 | 1.93 | 1.93 | 4.82 | 4.82 | - | - | 3.6 | 13.5 | 14.0 | 950 | 3670 | 3920 | 16.7 | 16.0 | 15.3 |
| | | 20+20+50+60 | 1.80 | 1.80 | 4.50 | 5.40 | - | - | 3.6 | 13.5 | 14.0 | 950 | 3670 | 3920 | 16.7 | 16.0 | 15.3 |
| | | 20+20+60+60 | 1.69 | 1.69 | 5.06 | 5.06 | - | - | 3.6 | 13.5 | 14.0 | 950 | 3670 | 3920 | 16.7 | 16.0 | 15.3 |
| | | 20+25+25+25 | 2.78 | 3.47 | 3.47 | 3.47 | - | - | 3.6 | 13.2 | 14.0 | 950 | 3550 | 3920 | 16.2 | 15.5 | 14.8 |
| | | 20+25+25+35 | 2.57 | 3.21 | 3.21 | 4.50 | - | - | 3.6 | 13.5 | 14.0 | 950 | 3700 | 3920 | 16.8 | 16.1 | 15.4 |
| | | 20+25+25+50 | 2.25 | 2.81 | 2.81 | 5.63 | - | - | 3.6 | 13.5 | 14.0 | 950 | 3690 | 3920 | 16.8 | 16.1 | 15.4 |
| | | 20+25+25+60 | 2.08 | 2.60 | 2.60 | 6.23 | - | - | 3.6 | 13.5 | 14.0 | 950 | 3680 | 3920 | 16.7 | 16.0 | 15.3 |
| | | 20+25+35+35 | 2.35 | 2.93 | 4.11 | 4.11 | - | - | 3.6 | 13.5 | 14.0 | 950 | 3690 | 3920 | 16.8 | 16.1 | 15.4 |
| | | 20+25+35+50 | 2.08 | 2.60 | 3.63 | 5.19 | - | - | 3.6 | 13.5 | 14.0 | 950 | 3680 | 3920 | 16.7 | 16.0 | 15.3 |
| | | 20+25+35+60 | 1.93 | 2.41 | 3.38 | 5.79 | - | - | 3.6 | 13.5 | 14.0 | 950 | 3670 | 3920 | 16.7 | 16.0 | 15.3 |
| | | 20+25+50+50 | 1.86 | 2.33 | 4.66 | 4.66 | - | - | 3.6 | 13.5 | 14.0 | 950 | 3670 | 3920 | 16.7 | 16.0 | 15.3 |
| | | 20+25+50+60 | 1.74 | 2.18 | 4.35 | 5.23 | - | - | 3.6 | 13.5 | 14.0 | 950 | 3670 | 3920 | 16.7 | 16.0 | 15.3 |
| | | 20+25+60+60 | 1.64 | 2.05 | 4.91 | 4.91 | - | - | 3.6 | 13.5 | 14.0 | 950 | 3660 | 3920 | 16.7 | 15.9 | 15.3 |
| | | 20+35+35+35 | 2.16 | 3.78 | 3.78 | 3.78 | - | - | 3.6 | 13.5 | 14.0 | 950 | 3680 | 3920 | 16.7 | 16.0 | 15.3 |
| | | 20+35+35+50 | 1.93 | 3.38 | 3.38 | 4.82 | - | - | 3.6 | 13.5 | 14.0 | 950 | 3670 | 3920 | 16.7 | 16.0 | 15.3 |
| | | 20+35+35+60 | 1.80 | 3.15 | 3.15 | 5.40 | - | - | 3.6 | 13.5 | 14.0 | 950 | 3670 | 3920 | 16.7 | 16.0 | 15.3 |
| | | 20+35+50+50 | 1.74 | 3.05 | 4.35 | 4.35 | - | - | 3.6 | 13.5 | 14.0 | 950 | 3670 | 3920 | 16.7 | 16.0 | 15.3 |
| | | 20+35+50+60 | 1.64 | 2.86 | 4.09 | 4.91 | - | - | 3.6 | 13.5 | 14.0 | 950 | 3660 | 3920 | 16.7 | 15.9 | 15.3 |
| | | 20+35+60+60 | 1.54 | 2.70 | 4.63 | 4.63 | - | - | 3.6 | 13.5 | 14.0 | 950 | 3660 | 3920 | 16.7 | 15.9 | 15.3 |
| | | 20+50+50+50 | 1.59 | 3.97 | 3.97 | 3.97 | - | - | 3.6 | 13.5 | 14.0 | 950 | 3660 | 3920 | 16.7 | 15.9 | 15.3 |
| | | 20+50+50+60 | 1.50 | 3.75 | 3.75 | 4.50 | - | - | 3.6 | 13.5 | 14.0 | 950 | 3660 | 3920 | 16.7 | 15.9 | 15.3 |
| | | 20+50+60+60 | 1.42 | 3.55 | 4.26 | 4.26 | - | - | 3.6 | 13.5 | 14.0 | 950 | 3650 | 3920 | 16.6 | 15.9 | 15.2 |
| | | 25+25+25+25 | 3.38 | 3.38 | 3.38 | 3.38 | - | - | 3.6 | 13.5 | 14.0 | 950 | 3700 | 3920 | 16.8 | 16.1 | 15.4 |
| | | 25+25+25+35 | 3.07 | 3.07 | 3.07 | 4.30 | - | - | 3.6 | 13.5 | 14.0 | 950 | 3690 | 3920 | 16.8 | 16.1 | 15.4 |
| | | 25+25+25+50 | 2.70 | 2.70 | 2.70 | 5.40 | - | - | 3.6 | 13.5 | 14.0 | 950 | 3680 | 3920 | 16.7 | 16.0 | 15.3 |
| | | 25+25+25+60 | 2.50 | 2.50 | 2.50 | 6.00 | - | - | 3.6 | 13.5 | 14.0 | 950 | 3680 | 3920 | 16.7 | 16.0 | 15.3 |
| | | 25+25+35+35 | 2.81 | 2.81 | 3.94 | 3.94 | - | - | 3.6 | 13.5 | 14.0 | 950 | 3690 | 3920 | 16.8 | 16.1 | 15.4 |
| | | 25+25+35+50 | 2.50 | 2.50 | 3.50 | 5.00 | - | - | 3.6 | 13.5 | 14.0 | 950 | 3680 | 3920 | 16.7 | 16.0 | 15.3 |
| | | 25+25+35+60 | 2.33 | 2.33 | 3.26 | 5.59 | - | - | 3.6 | 13.5 | 14.0 | 950 | 3670 | 3920 | 16.7 | 16.0 | 15.3 |
| | | 25+25+50+50 | 2.25 | 2.25 | 4.50 | 4.50 | - | - | 3.6 | 13.5 | 14.0 | 950 | 3670 | 3920 | 16.7 | 16.0 | 15.3 |
| | | 25+25+50+60 | 2.11 | 2.11 | 4.22 | 5.06 | - | - | 3.6 | 13.5 | 14.0 | 950 | 3670 | 3920 | 16.7 | 16.0 | 15.3 |
| | | 25+25+60+60 | 1.99 | 1.99 | 4.76 | 4.76 | - | - | 3.6 | 13.5 | 14.0 | 950 | 3660 | 3920 | 16.7 | 15.9 | 15.3 |
| | | 25+35+35+35 | 2.60 | 3.63 | 3.63 | 3.63 | - | - | 3.6 | 13.5 | 14.0 | 950 | 3680 | 3920 | 16.7 | 16.0 | 15.3 |
| | | 25+35+35+50 | 2.33 | 3.26 | 3.26 | 4.66 | - | - | 3.6 | 13.5 | 14.0 | 950 | 3670 | 3920 | 16.7 | 16.0 | 15.3 |
| | | 25+35+35+60 | 2.18 | 3.05 | 3.05 | 5.23 | - | - | 3.6 | 13.5 | 14.0 | 950 | 3670 | 3920 | 16.7 | 16.0 | 15.3 |
| | | 25+35+50+50 | 2.11 | 2.95 | 4.22 | 4.22 | - | - | 3.6 | 13.5 | 14.0 | 950 | 3670 | 3920 | 16.7 | 16.0 | 15.3 |
| | | 25+35+50+60 | 1.99 | 2.78 | 3.97 | 4.76 | - | - | 3.6 | 13.5 | 14.0 | 950 | 3660 | 3920 | 16.7 | 15.9 | 15.3 |
| | | 25+35+60+60 | 1.88 | 2.63 | 4.50 | 4.50 | - | - | 3.6 | 13.5 | 14.0 | 950 | 3660 | 3920 | 16.7 | 15.9 | 15.3 |
| | | 25+50+50+50 | 1.93 | 3.86 | 3.86 | 3.86 | - | - | 3.6 | 13.5 | 14.0 | 950 | 3660 | 3920 | 16.7 | 15.9 | 15.3 |
| | | 25+50+50+60 | 1.82 | 3.65 | 3.65 | 4.38 | - | - | 3.6 | 13.5 | 14.0 | 950 | 3650 | 3920 | 16.6 | 15.9 | 15.2 |
| | | 25+50+60+60 | 1.73 | 3.46 | 4.15 | 4.15 | - | - | 3.6 | 13.5 | 14.0 | 950 | 3650 | 3920 | 16.6 | 15.9 | 15.2 |
| | | 35+35+35+35 | 3.38 | 3.38 | 3.38 | 3.38 | - | - | 3.6 | 13.5 | 14.0 | 950 | 3670 | 3920 | 16.7 | 16.0 | 15.3 |
| | | 35+35+35+50 | 3.05 | 3.05 | 3.05 | 4.35 | - | - | 3.6 | 13.5 | 14.0 | 950 | 3670 | 3920 | 16.7 | 16.0 | 15.3 |
| | | 35+35+35+60 | 2.86 | 2.86 | 2.86 | 4.91 | - | - | 3.6 | 13.5 | 14.0 | 950 | 3660 | 3920 | 16.7 | 15.9 | 15.3 |
| | | 35+35+50+50 | 2.78 | 2.78 | 3.97 | 3.97 | - | - | 3.6 | 13.5 | 14.0 | 950 | 3660 | 3920 | 16.7 | 15.9 | 15.3 |

R410A

# MULTI-SPLIT SYSTEM

| Indoor unit combination | | | Heating capacity (kW) | | | | | | | | | Power consumption(W) | | | Standard current(A) | | |
|---|---|---|---|---|---|---|---|---|---|---|---|---|---|---|---|---|---|
| | | | Room heating capacity | | | | | | Total capacity | | | Min. | Standard | Max. | 220V | 230V | 240V |
| | | | A | B | C | D | E | F | Min. | Standard | Max. | | | | | | |
| Heating operation | 4 room | 35+35+50+60 | 2.63 | 2.63 | 3.75 | 4.50 | - | - | 3.6 | 13.5 | 14.0 | 950 | 3660 | 3920 | 16.7 | 15.9 | 15.3 |
| | | 35+35+60+60 | 2.49 | 2.49 | 4.26 | 4.26 | - | - | 3.6 | 13.5 | 14.0 | 950 | 3650 | 3920 | 16.6 | 15.9 | 15.2 |
| | | 35+50+50+50 | 2.55 | 3.65 | 3.65 | 3.65 | - | - | 3.6 | 13.5 | 14.0 | 950 | 3650 | 3920 | 16.6 | 15.9 | 15.2 |
| | | 35+50+50+60 | 2.42 | 3.46 | 3.46 | 4.15 | - | - | 3.6 | 13.5 | 14.0 | 950 | 3650 | 3920 | 16.6 | 15.9 | 15.2 |
| | 5 room | 20+20+20+20+20 | 2.70 | 2.70 | 2.70 | 2.70 | 2.70 | - | 4.0 | 13.5 | 14.0 | 1050 | 3380 | 3470 | 15.4 | 14.7 | 14.1 |
| | | 20+20+20+20+25 | 2.57 | 2.57 | 2.57 | 2.57 | 3.21 | - | 4.0 | 13.5 | 14.0 | 1050 | 3380 | 3470 | 15.4 | 14.7 | 14.1 |
| | | 20+20+20+20+35 | 2.35 | 2.35 | 2.35 | 2.35 | 4.11 | - | 4.0 | 13.5 | 14.0 | 1050 | 3370 | 3470 | 15.3 | 14.7 | 14.1 |
| | | 20+20+20+20+50 | 2.08 | 2.08 | 2.08 | 2.08 | 5.19 | - | 4.0 | 13.5 | 14.0 | 1050 | 3360 | 3470 | 15.3 | 14.6 | 14.0 |
| | | 20+20+20+20+60 | 1.93 | 1.93 | 1.93 | 1.93 | 5.79 | - | 4.0 | 13.5 | 14.0 | 1050 | 3360 | 3470 | 15.3 | 14.6 | 14.0 |
| | | 20+20+20+25+25 | 2.45 | 2.45 | 2.45 | 3.07 | 3.07 | - | 4.0 | 13.5 | 14.0 | 1050 | 3380 | 3470 | 15.4 | 14.7 | 14.1 |
| | | 20+20+20+25+35 | 2.25 | 2.25 | 2.25 | 2.81 | 3.94 | - | 4.0 | 13.5 | 14.0 | 1050 | 3370 | 3470 | 15.3 | 14.7 | 14.1 |
| | | 20+20+20+25+50 | 2.00 | 2.00 | 2.00 | 2.50 | 5.00 | - | 4.0 | 13.5 | 14.0 | 1050 | 3360 | 3470 | 15.3 | 14.6 | 14.0 |
| | | 20+20+20+25+60 | 1.86 | 1.86 | 1.86 | 2.33 | 5.59 | - | 4.0 | 13.5 | 14.0 | 1050 | 3350 | 3470 | 15.2 | 14.6 | 14.0 |
| | | 20+20+20+35+35 | 2.08 | 2.08 | 2.08 | 3.63 | 3.63 | - | 4.0 | 13.5 | 14.0 | 1050 | 3360 | 3470 | 15.3 | 14.6 | 14.0 |
| | | 20+20+20+35+50 | 1.86 | 1.86 | 1.86 | 3.26 | 4.66 | - | 4.0 | 13.5 | 14.0 | 1050 | 3350 | 3470 | 15.2 | 14.6 | 14.0 |
| | | 20+20+20+35+60 | 1.74 | 1.74 | 1.74 | 3.05 | 5.23 | - | 4.0 | 13.5 | 14.0 | 1050 | 3350 | 3470 | 15.2 | 14.6 | 14.0 |
| | | 20+20+20+50+50 | 1.69 | 1.69 | 1.69 | 4.22 | 4.22 | - | 4.0 | 13.5 | 14.0 | 1050 | 3340 | 3470 | 15.2 | 14.5 | 13.9 |
| | | 20+20+20+50+60 | 1.59 | 1.59 | 1.59 | 3.97 | 4.76 | - | 4.0 | 13.5 | 14.0 | 1050 | 3340 | 3470 | 15.2 | 14.5 | 13.9 |
| | | 20+20+20+60+60 | 1.50 | 1.50 | 1.50 | 4.50 | 4.50 | - | 4.0 | 13.5 | 14.0 | 1050 | 3330 | 3470 | 15.2 | 14.5 | 13.9 |
| | | 20+20+25+25+25 | 2.35 | 2.35 | 2.93 | 2.93 | 2.93 | - | 4.0 | 13.5 | 14.0 | 1050 | 3370 | 3470 | 15.3 | 14.7 | 14.1 |
| | | 20+20+25+25+35 | 2.16 | 2.16 | 2.70 | 2.70 | 3.78 | - | 4.0 | 13.5 | 14.0 | 1050 | 3370 | 3470 | 15.3 | 14.7 | 14.1 |
| | | 20+20+25+25+50 | 1.93 | 1.93 | 2.41 | 2.41 | 4.82 | - | 4.0 | 13.5 | 14.0 | 1050 | 3360 | 3470 | 15.3 | 14.6 | 14.0 |
| | | 20+20+25+25+60 | 1.80 | 1.80 | 2.25 | 2.25 | 5.40 | - | 4.0 | 13.5 | 14.0 | 1050 | 3350 | 3470 | 15.2 | 14.6 | 14.0 |
| | | 20+20+25+35+35 | 2.00 | 2.00 | 2.50 | 3.50 | 3.50 | - | 4.0 | 13.5 | 14.0 | 1050 | 3360 | 3470 | 15.3 | 14.6 | 14.0 |
| | | 20+20+25+35+50 | 1.80 | 1.80 | 2.25 | 3.15 | 4.50 | - | 4.0 | 13.5 | 14.0 | 1050 | 3350 | 3470 | 15.2 | 14.6 | 14.0 |
| | | 20+20+25+35+60 | 1.69 | 1.69 | 2.11 | 2.95 | 5.06 | - | 4.0 | 13.5 | 14.0 | 1050 | 3340 | 3470 | 15.2 | 14.5 | 13.9 |
| | | 20+20+25+50+50 | 1.64 | 1.64 | 2.05 | 4.09 | 4.09 | - | 4.0 | 13.5 | 14.0 | 1050 | 3340 | 3470 | 15.2 | 14.5 | 13.9 |
| | | 20+20+25+50+60 | 1.54 | 1.54 | 1.93 | 3.86 | 4.63 | - | 4.0 | 13.5 | 14.0 | 1050 | 3340 | 3470 | 15.2 | 14.5 | 13.9 |
| | | 20+20+25+60+60 | 1.46 | 1.46 | 1.82 | 4.38 | 4.38 | - | 4.0 | 13.5 | 14.0 | 1050 | 3330 | 3470 | 15.2 | 14.5 | 13.9 |
| | | 20+20+35+35+35 | 1.86 | 1.86 | 3.26 | 3.26 | 3.26 | - | 4.0 | 13.5 | 14.0 | 1050 | 3350 | 3470 | 15.2 | 14.6 | 14.0 |
| | | 20+20+35+35+50 | 1.69 | 1.69 | 2.95 | 2.95 | 4.22 | - | 4.0 | 13.5 | 14.0 | 1050 | 3340 | 3470 | 15.2 | 14.5 | 13.9 |
| | | 20+20+35+35+60 | 1.59 | 1.59 | 2.78 | 2.78 | 4.76 | - | 4.0 | 13.5 | 14.0 | 1050 | 3340 | 3470 | 15.2 | 14.5 | 13.9 |
| | | 20+20+35+50+50 | 1.54 | 1.54 | 2.70 | 3.86 | 3.86 | - | 4.0 | 13.5 | 14.0 | 1050 | 3340 | 3470 | 15.2 | 14.5 | 13.9 |
| | | 20+20+35+50+60 | 1.46 | 1.46 | 2.55 | 3.65 | 4.38 | - | 4.0 | 13.5 | 14.0 | 1050 | 3330 | 3470 | 15.2 | 14.5 | 13.9 |
| | | 20+20+35+60+60 | 1.38 | 1.38 | 2.42 | 4.15 | 4.15 | - | 4.0 | 13.5 | 14.0 | 1050 | 3320 | 3470 | 15.1 | 14.4 | 13.8 |
| | | 20+20+50+50+50 | 1.42 | 1.42 | 3.55 | 3.55 | 3.55 | - | 4.0 | 13.5 | 14.0 | 1050 | 3320 | 3470 | 15.1 | 14.4 | 13.8 |
| | | 20+25+25+25+25 | 2.25 | 2.81 | 2.81 | 2.81 | 2.81 | - | 4.0 | 13.5 | 14.0 | 1050 | 3370 | 3470 | 15.3 | 14.7 | 14.1 |
| | | 20+25+25+25+35 | 2.08 | 2.60 | 2.60 | 2.60 | 3.63 | - | 4.0 | 13.5 | 14.0 | 1050 | 3360 | 3470 | 15.3 | 14.6 | 14.0 |
| | | 20+25+25+25+50 | 1.86 | 2.33 | 2.33 | 2.33 | 4.66 | - | 4.0 | 13.5 | 14.0 | 1050 | 3350 | 3470 | 15.2 | 14.6 | 14.0 |
| | | 20+25+25+25+60 | 1.74 | 2.18 | 2.18 | 2.18 | 5.23 | - | 4.0 | 13.5 | 14.0 | 1050 | 3350 | 3470 | 15.2 | 14.6 | 14.0 |
| | | 20+25+25+35+35 | 1.93 | 2.41 | 2.41 | 3.38 | 3.38 | - | 4.0 | 13.5 | 14.0 | 1050 | 3360 | 3470 | 15.3 | 14.6 | 14.0 |
| | | 20+25+25+35+50 | 1.74 | 2.18 | 2.18 | 3.05 | 4.35 | - | 4.0 | 13.5 | 14.0 | 1050 | 3350 | 3470 | 15.2 | 14.6 | 14.0 |
| | | 20+25+25+35+60 | 1.64 | 2.05 | 2.05 | 2.86 | 4.91 | - | 4.0 | 13.5 | 14.0 | 1050 | 3340 | 3470 | 15.2 | 14.5 | 13.9 |
| | | 20+25+25+50+50 | 1.59 | 1.99 | 1.99 | 3.97 | 3.97 | - | 4.0 | 13.5 | 14.0 | 1050 | 3340 | 3470 | 15.2 | 14.5 | 13.9 |
| | | 20+25+25+50+60 | 1.50 | 1.88 | 1.88 | 3.75 | 4.50 | - | 4.0 | 13.5 | 14.0 | 1050 | 3330 | 3470 | 15.2 | 14.5 | 13.9 |
| | | 20+25+25+60+60 | 1.42 | 1.78 | 1.78 | 4.26 | 4.26 | - | 4.0 | 13.5 | 14.0 | 1050 | 3320 | 3470 | 15.1 | 14.4 | 13.8 |
| | | 20+25+35+35+35 | 1.80 | 2.25 | 3.15 | 3.15 | 3.15 | - | 4.0 | 13.5 | 14.0 | 1050 | 3350 | 3470 | 15.2 | 14.6 | 14.0 |
| | | 20+25+35+35+50 | 1.64 | 2.05 | 2.86 | 2.86 | 4.09 | - | 4.0 | 13.5 | 14.0 | 1050 | 3340 | 3470 | 15.2 | 14.5 | 13.9 |
| | | 20+25+35+35+60 | 1.54 | 1.93 | 2.70 | 2.70 | 4.63 | - | 4.0 | 13.5 | 14.0 | 1050 | 3340 | 3470 | 15.2 | 14.5 | 13.9 |
| | | 20+25+35+50+50 | 1.50 | 1.88 | 2.63 | 3.75 | 3.75 | - | 4.0 | 13.5 | 14.0 | 1050 | 3330 | 3470 | 15.2 | 14.5 | 13.9 |
| | | 20+25+35+50+60 | 1.42 | 1.78 | 2.49 | 3.55 | 4.26 | - | 4.0 | 13.5 | 14.0 | 1050 | 3320 | 3470 | 15.1 | 14.4 | 13.8 |
| | | 20+25+50+50+50 | 1.38 | 1.73 | 3.46 | 3.46 | 3.46 | - | 4.0 | 13.5 | 14.0 | 1050 | 3320 | 3470 | 15.1 | 14.4 | 13.8 |
| | | 20+35+35+35+35 | 1.69 | 2.95 | 2.95 | 2.95 | 2.95 | - | 4.0 | 13.5 | 14.0 | 1050 | 3340 | 3470 | 15.2 | 14.5 | 13.9 |
| | | 20+35+35+35+50 | 1.54 | 2.70 | 2.70 | 2.70 | 3.86 | - | 4.0 | 13.5 | 14.0 | 1050 | 3340 | 3470 | 15.2 | 14.5 | 13.9 |
| | | 20+35+35+35+60 | 1.46 | 2.55 | 2.55 | 2.55 | 4.38 | - | 4.0 | 13.5 | 14.0 | 1050 | 3330 | 3470 | 15.2 | 14.5 | 13.9 |
| | | 20+35+35+50+50 | 1.42 | 2.49 | 2.49 | 3.55 | 3.55 | - | 4.0 | 13.5 | 14.0 | 1050 | 3320 | 3470 | 15.1 | 14.4 | 13.8 |
| | | 25+25+25+25+25 | 2.70 | 2.70 | 2.70 | 2.70 | 2.70 | - | 4.0 | 13.5 | 14.0 | 1050 | 3370 | 3470 | 15.3 | 14.7 | 14.1 |
| | | 25+25+25+25+35 | 2.50 | 2.50 | 2.50 | 2.50 | 3.50 | - | 4.0 | 13.5 | 14.0 | 1050 | 3360 | 3470 | 15.3 | 14.6 | 14.0 |
| | | 25+25+25+25+50 | 2.25 | 2.25 | 2.25 | 2.25 | 4.50 | - | 4.0 | 13.5 | 14.0 | 1050 | 3350 | 3470 | 15.2 | 14.6 | 14.0 |
| | | 25+25+25+25+60 | 2.11 | 2.11 | 2.11 | 2.11 | 5.06 | - | 4.0 | 13.5 | 14.0 | 1050 | 3340 | 3470 | 15.2 | 14.5 | 13.9 |
| | | 25+25+25+35+35 | 2.33 | 2.33 | 2.33 | 3.26 | 3.26 | - | 4.0 | 13.5 | 14.0 | 1050 | 3350 | 3470 | 15.2 | 14.6 | 14.0 |
| | | 25+25+25+35+50 | 2.11 | 2.11 | 2.11 | 2.95 | 4.22 | - | 4.0 | 13.5 | 14.0 | 1050 | 3340 | 3470 | 15.2 | 14.5 | 13.9 |
| | | 25+25+25+35+60 | 1.99 | 1.99 | 1.99 | 2.78 | 4.76 | - | 4.0 | 13.5 | 14.0 | 1050 | 3340 | 3470 | 15.2 | 14.5 | 13.9 |
| | | 25+25+25+50+50 | 1.93 | 1.93 | 1.93 | 3.86 | 3.86 | - | 4.0 | 13.5 | 14.0 | 1050 | 3340 | 3470 | 15.2 | 14.5 | 13.9 |
| | | 25+25+25+50+60 | 1.82 | 1.82 | 1.82 | 3.65 | 4.38 | - | 4.0 | 13.5 | 14.0 | 1050 | 3330 | 3470 | 15.2 | 14.5 | 13.9 |
| | | 25+25+25+60+60 | 1.73 | 1.73 | 1.73 | 4.15 | 4.15 | - | 4.0 | 13.5 | 14.0 | 1050 | 3320 | 3470 | 15.1 | 14.4 | 13.8 |
| | | 25+25+35+35+35 | 2.18 | 2.18 | 3.05 | 3.05 | 3.05 | - | 4.0 | 13.5 | 14.0 | 1050 | 3350 | 3470 | 15.2 | 14.6 | 14.0 |
| | | 25+25+35+35+50 | 1.99 | 1.99 | 2.78 | 2.78 | 3.97 | - | 4.0 | 13.5 | 14.0 | 1050 | 3340 | 3470 | 15.2 | 14.5 | 13.9 |
| | | 25+25+35+35+60 | 1.88 | 1.88 | 2.63 | 2.63 | 4.50 | - | 4.0 | 13.5 | 14.0 | 1050 | 3330 | 3470 | 15.2 | 14.5 | 13.9 |
| | | 25+25+35+50+50 | 1.82 | 1.82 | 2.55 | 3.65 | 3.65 | - | 4.0 | 13.5 | 14.0 | 1050 | 3330 | 3470 | 15.2 | 14.5 | 13.9 |
| | | 25+25+35+50+60 | 1.73 | 1.73 | 2.42 | 3.46 | 4.15 | - | 4.0 | 13.5 | 14.0 | 1050 | 3320 | 3470 | 15.1 | 14.4 | 13.8 |
| | | 25+35+35+35+35 | 2.05 | 2.86 | 2.86 | 2.86 | 2.86 | - | 4.0 | 13.5 | 14.0 | 1050 | 3340 | 3470 | 15.2 | 14.5 | 13.9 |
| | | 25+35+35+35+50 | 1.88 | 2.63 | 2.63 | 2.63 | 3.75 | - | 4.0 | 13.5 | 14.0 | 1050 | 3330 | 3470 | 15.2 | 14.5 | 13.9 |
| | | 25+35+35+35+60 | 1.78 | 2.49 | 2.49 | 2.49 | 4.26 | - | 4.0 | 13.5 | 14.0 | 1050 | 3320 | 3470 | 15.1 | 14.4 | 13.8 |
| | | 25+35+35+50+50 | 1.73 | 2.42 | 2.42 | 3.46 | 3.46 | - | 4.0 | 13.5 | 14.0 | 1050 | 3320 | 3470 | 15.1 | 14.4 | 13.8 |
| | | 35+35+35+35+35 | 2.70 | 2.70 | 2.70 | 2.70 | 2.70 | - | 4.0 | 13.5 | 14.0 | 1050 | 3340 | 3470 | 15.2 | 14.5 | 13.9 |
| | | 35+35+35+35+50 | 2.49 | 2.49 | 2.49 | 2.49 | 3.55 | - | 4.0 | 13.5 | 14.0 | 1050 | 3320 | 3470 | 15.1 | 14.4 | 13.8 |

| Indoor unit combination | | | Heating capacity (kW) | | | | | | | | | Power consumption(W) | | | Standard current(A) | | |
|---|---|---|---|---|---|---|---|---|---|---|---|---|---|---|---|---|---|
| | | | Room heating capacity | | | | | | Total capacity | | | Min. | Standard | Max. | 220V | 230V | 240V |
| | | | A | B | C | D | E | F | Min. | Standard | Max. | | | | | | |
| Heating operation | 6 room | 20+20+20+20+20+20 | 2.25 | 2.25 | 2.25 | 2.25 | 2.25 | 2.25 | 4.5 | 13.5 | 14.0 | 1150 | 3260 | 3420 | 14.8 | 14.2 | 13.6 |
| | | 20+20+20+20+20+25 | 2.16 | 2.16 | 2.16 | 2.16 | 2.16 | 2.70 | 4.5 | 13.5 | 14.0 | 1150 | 3250 | 3420 | 14.8 | 14.1 | 13.6 |
| | | 20+20+20+20+20+35 | 2.00 | 2.00 | 2.00 | 2.00 | 2.00 | 3.50 | 4.5 | 13.5 | 14.0 | 1150 | 3250 | 3420 | 14.8 | 14.1 | 13.6 |
| | | 20+20+20+20+20+50 | 1.80 | 1.80 | 1.80 | 1.80 | 1.80 | 4.50 | 4.5 | 13.5 | 14.0 | 1150 | 3250 | 3420 | 14.8 | 14.1 | 13.6 |
| | | 20+20+20+20+20+60 | 1.69 | 1.69 | 1.69 | 1.69 | 1.69 | 5.06 | 4.5 | 13.5 | 14.0 | 1150 | 3240 | 3420 | 14.7 | 14.1 | 13.5 |
| | | 20+20+20+20+25+25 | 2.08 | 2.08 | 2.08 | 2.08 | 2.60 | 2.60 | 4.5 | 13.5 | 14.0 | 1150 | 3250 | 3420 | 14.8 | 14.1 | 13.6 |
| | | 20+20+20+20+25+35 | 1.93 | 1.93 | 1.93 | 1.93 | 2.41 | 3.38 | 4.5 | 13.5 | 14.0 | 1150 | 3250 | 3420 | 14.8 | 14.1 | 13.6 |
| | | 20+20+20+20+25+50 | 1.74 | 1.74 | 1.74 | 1.74 | 2.18 | 4.35 | 4.5 | 13.5 | 14.0 | 1150 | 3240 | 3420 | 14.7 | 14.1 | 13.5 |
| | | 20+20+20+20+25+60 | 1.64 | 1.64 | 1.64 | 1.64 | 2.05 | 4.91 | 4.5 | 13.5 | 14.0 | 1150 | 3240 | 3420 | 14.7 | 14.1 | 13.5 |
| | | 20+20+20+20+35+35 | 1.80 | 1.80 | 1.80 | 1.80 | 3.15 | 3.15 | 4.5 | 13.5 | 14.0 | 1150 | 3250 | 3420 | 14.8 | 14.1 | 13.6 |
| | | 20+20+20+20+35+50 | 1.64 | 1.64 | 1.64 | 1.64 | 2.86 | 4.09 | 4.5 | 13.5 | 14.0 | 1150 | 3240 | 3420 | 14.7 | 14.1 | 13.5 |
| | | 20+20+20+20+35+60 | 1.54 | 1.54 | 1.54 | 1.54 | 2.70 | 4.63 | 4.5 | 13.5 | 14.0 | 1150 | 3230 | 3420 | 14.7 | 14.1 | 13.5 |
| | | 20+20+20+20+50+50 | 1.50 | 1.50 | 1.50 | 1.50 | 3.75 | 3.75 | 4.5 | 13.5 | 14.0 | 1150 | 3230 | 3420 | 14.7 | 14.1 | 13.5 |
| | | 20+20+20+20+50+60 | 1.42 | 1.42 | 1.42 | 1.42 | 3.55 | 4.26 | 4.5 | 13.5 | 14.0 | 1150 | 3230 | 3420 | 14.7 | 14.1 | 13.5 |
| | | 20+20+20+25+25+25 | 2.00 | 2.00 | 2.00 | 2.50 | 2.50 | 2.50 | 4.5 | 13.5 | 14.0 | 1150 | 3250 | 3420 | 14.8 | 14.1 | 13.6 |
| | | 20+20+20+25+25+35 | 1.86 | 1.86 | 1.86 | 2.33 | 2.33 | 3.26 | 4.5 | 13.5 | 14.0 | 1150 | 3250 | 3420 | 14.8 | 14.1 | 13.6 |
| | | 20+20+20+25+25+50 | 1.69 | 1.69 | 1.69 | 2.11 | 2.11 | 4.22 | 4.5 | 13.5 | 14.0 | 1150 | 3240 | 3420 | 14.7 | 14.1 | 13.5 |
| | | 20+20+20+25+25+60 | 1.59 | 1.59 | 1.59 | 1.99 | 1.99 | 4.76 | 4.5 | 13.5 | 14.0 | 1150 | 3240 | 3420 | 14.7 | 14.1 | 13.5 |
| | | 20+20+20+25+35+35 | 1.74 | 1.74 | 1.74 | 2.18 | 3.05 | 3.05 | 4.5 | 13.5 | 14.0 | 1150 | 3240 | 3420 | 14.7 | 14.1 | 13.5 |
| | | 20+20+20+25+35+50 | 1.59 | 1.59 | 1.59 | 1.99 | 2.78 | 3.97 | 4.5 | 13.5 | 14.0 | 1150 | 3240 | 3420 | 14.7 | 14.1 | 13.5 |
| | | 20+20+20+25+35+60 | 1.50 | 1.50 | 1.50 | 1.88 | 2.63 | 4.50 | 4.5 | 13.5 | 14.0 | 1150 | 3230 | 3420 | 14.7 | 14.1 | 13.5 |
| | | 20+20+20+25+50+50 | 1.46 | 1.46 | 1.46 | 1.82 | 3.65 | 3.65 | 4.5 | 13.5 | 14.0 | 1150 | 3230 | 3420 | 14.7 | 14.1 | 13.5 |
| | | 20+20+20+25+50+60 | 1.38 | 1.38 | 1.38 | 1.73 | 3.46 | 4.15 | 4.5 | 13.5 | 14.0 | 1150 | 3220 | 3420 | 14.7 | 14.0 | 13.4 |
| | | 20+20+20+35+35+35 | 1.64 | 1.64 | 1.64 | 2.86 | 2.86 | 2.86 | 4.5 | 13.5 | 14.0 | 1150 | 3240 | 3420 | 14.7 | 14.1 | 13.5 |
| | | 20+20+20+35+35+50 | 1.50 | 1.50 | 1.50 | 2.63 | 2.63 | 3.75 | 4.5 | 13.5 | 14.0 | 1150 | 3230 | 3420 | 14.7 | 14.1 | 13.5 |
| | | 20+20+20+35+35+60 | 1.42 | 1.42 | 1.42 | 2.49 | 2.49 | 4.26 | 4.5 | 13.5 | 14.0 | 1150 | 3230 | 3420 | 14.7 | 14.1 | 13.5 |
| | | 20+20+20+35+50+50 | 1.38 | 1.38 | 1.38 | 2.42 | 3.46 | 3.46 | 4.5 | 13.5 | 14.0 | 1150 | 3220 | 3420 | 14.7 | 14.0 | 13.4 |
| | | 20+20+25+25+25+25 | 1.93 | 1.93 | 2.41 | 2.41 | 2.41 | 2.41 | 4.5 | 13.5 | 14.0 | 1150 | 3250 | 3420 | 14.8 | 14.1 | 13.6 |
| | | 20+20+25+25+25+35 | 1.80 | 1.80 | 2.25 | 2.25 | 2.25 | 3.15 | 4.5 | 13.5 | 14.0 | 1150 | 3250 | 3420 | 14.8 | 14.1 | 13.6 |
| | | 20+20+25+25+25+50 | 1.64 | 1.64 | 2.05 | 2.05 | 2.05 | 4.09 | 4.5 | 13.5 | 14.0 | 1150 | 3240 | 3420 | 14.7 | 14.1 | 13.5 |
| | | 20+20+25+25+25+60 | 1.54 | 1.54 | 1.93 | 1.93 | 1.93 | 4.63 | 4.5 | 13.5 | 14.0 | 1150 | 3230 | 3420 | 14.7 | 14.1 | 13.5 |
| | | 20+20+25+25+35+35 | 1.69 | 1.69 | 2.11 | 2.11 | 2.95 | 2.95 | 4.5 | 13.5 | 14.0 | 1150 | 3240 | 3420 | 14.7 | 14.1 | 13.5 |
| | | 20+20+25+25+35+50 | 1.54 | 1.54 | 1.93 | 1.93 | 2.70 | 3.86 | 4.5 | 13.5 | 14.0 | 1150 | 3230 | 3420 | 14.7 | 14.1 | 13.5 |
| | | 20+20+25+25+35+60 | 1.46 | 1.46 | 1.82 | 1.82 | 2.55 | 4.38 | 4.5 | 13.5 | 14.0 | 1150 | 3230 | 3420 | 14.7 | 14.1 | 13.5 |
| | | 20+20+25+25+50+50 | 1.42 | 1.42 | 1.78 | 1.78 | 3.55 | 3.55 | 4.5 | 13.5 | 14.0 | 1150 | 3230 | 3420 | 14.7 | 14.1 | 13.5 |
| | | 20+20+25+35+35+35 | 1.59 | 1.59 | 1.99 | 2.78 | 2.78 | 2.78 | 4.5 | 13.5 | 14.0 | 1150 | 3240 | 3420 | 14.7 | 14.1 | 13.5 |
| | | 20+20+25+35+35+50 | 1.46 | 1.46 | 1.82 | 2.55 | 2.55 | 3.65 | 4.5 | 13.5 | 14.0 | 1150 | 3230 | 3420 | 14.7 | 14.1 | 13.5 |
| | | 20+20+25+35+35+60 | 1.38 | 1.38 | 1.73 | 2.42 | 2.42 | 4.15 | 4.5 | 13.5 | 14.0 | 1150 | 3220 | 3420 | 14.7 | 14.0 | 13.4 |
| | | 20+20+35+35+35+35 | 1.50 | 1.50 | 2.63 | 2.63 | 2.63 | 2.63 | 4.5 | 13.5 | 14.0 | 1150 | 3230 | 3420 | 14.7 | 14.1 | 13.5 |
| | | 20+20+35+35+35+50 | 1.38 | 1.38 | 2.42 | 2.42 | 2.42 | 3.46 | 4.5 | 13.5 | 14.0 | 1150 | 3220 | 3420 | 14.7 | 14.0 | 13.4 |
| | | 20+25+25+25+25+25 | 1.86 | 2.33 | 2.33 | 2.33 | 2.33 | 2.33 | 4.5 | 13.5 | 14.0 | 1150 | 3250 | 3420 | 14.8 | 14.1 | 13.6 |
| | | 20+25+25+25+25+35 | 1.74 | 2.18 | 2.18 | 2.18 | 2.18 | 3.05 | 4.5 | 13.5 | 14.0 | 1150 | 3240 | 3420 | 14.7 | 14.1 | 13.5 |
| | | 20+25+25+25+25+50 | 1.59 | 1.99 | 1.99 | 1.99 | 1.99 | 3.97 | 4.5 | 13.5 | 14.0 | 1150 | 3240 | 3420 | 14.7 | 14.1 | 13.5 |
| | | 20+25+25+25+25+60 | 1.50 | 1.88 | 1.88 | 1.88 | 1.88 | 4.50 | 4.5 | 13.5 | 14.0 | 1150 | 3230 | 3420 | 14.7 | 14.1 | 13.5 |
| | | 20+25+25+25+35+35 | 1.64 | 2.05 | 2.05 | 2.05 | 2.86 | 2.86 | 4.5 | 13.5 | 14.0 | 1150 | 3240 | 3420 | 14.7 | 14.1 | 13.5 |
| | | 20+25+25+25+35+50 | 1.50 | 1.88 | 1.88 | 1.88 | 2.63 | 3.75 | 4.5 | 13.5 | 14.0 | 1150 | 3230 | 3420 | 14.7 | 14.1 | 13.5 |
| | | 20+25+25+25+35+60 | 1.42 | 1.78 | 1.78 | 1.78 | 2.49 | 4.26 | 4.5 | 13.5 | 14.0 | 1150 | 3230 | 3420 | 14.7 | 14.1 | 13.5 |
| | | 20+25+25+25+50+50 | 1.38 | 1.73 | 1.73 | 1.73 | 3.46 | 3.46 | 4.5 | 13.5 | 14.0 | 1150 | 3220 | 3420 | 14.7 | 14.0 | 13.4 |
| | | 20+25+25+35+35+35 | 1.54 | 1.93 | 1.93 | 2.70 | 2.70 | 2.70 | 4.5 | 13.5 | 14.0 | 1150 | 3230 | 3420 | 14.7 | 14.1 | 13.5 |
| | | 20+25+25+35+35+50 | 1.42 | 1.78 | 1.78 | 2.49 | 2.49 | 3.55 | 4.5 | 13.5 | 14.0 | 1150 | 3230 | 3420 | 14.7 | 14.1 | 13.5 |
| | | 20+25+35+35+35+35 | 1.46 | 1.82 | 2.55 | 2.55 | 2.55 | 2.55 | 4.5 | 13.5 | 14.0 | 1150 | 3230 | 3420 | 14.7 | 14.1 | 13.5 |
| | | 20+35+35+35+35+35 | 1.38 | 2.42 | 2.42 | 2.42 | 2.42 | 2.42 | 4.5 | 13.5 | 14.0 | 1150 | 3220 | 3420 | 14.7 | 14.0 | 13.4 |
| | | 25+25+25+25+25+25 | 2.25 | 2.25 | 2.25 | 2.25 | 2.25 | 2.25 | 4.5 | 13.5 | 14.0 | 1150 | 3240 | 3420 | 14.7 | 14.1 | 13.5 |
| | | 25+25+25+25+25+35 | 2.11 | 2.11 | 2.11 | 2.11 | 2.11 | 2.95 | 4.5 | 13.5 | 14.0 | 1150 | 3240 | 3420 | 14.7 | 14.1 | 13.5 |
| | | 25+25+25+25+25+50 | 1.93 | 1.93 | 1.93 | 1.93 | 1.93 | 3.86 | 4.5 | 13.5 | 14.0 | 1150 | 3230 | 3420 | 14.7 | 14.1 | 13.5 |
| | | 25+25+25+25+25+60 | 1.82 | 1.82 | 1.82 | 1.82 | 1.82 | 4.38 | 4.5 | 13.5 | 14.0 | 1150 | 3230 | 3420 | 14.7 | 14.1 | 13.5 |
| | | 25+25+25+25+35+35 | 1.99 | 1.99 | 1.99 | 1.99 | 2.78 | 2.78 | 4.5 | 13.5 | 14.0 | 1150 | 3240 | 3420 | 14.7 | 14.1 | 13.5 |
| | | 25+25+25+25+35+50 | 1.82 | 1.82 | 1.82 | 1.82 | 2.55 | 3.65 | 4.5 | 13.5 | 14.0 | 1150 | 3230 | 3420 | 14.7 | 14.1 | 13.5 |
| | | 25+25+25+25+35+60 | 1.73 | 1.73 | 1.73 | 1.73 | 2.42 | 4.15 | 4.5 | 13.5 | 14.0 | 1150 | 3220 | 3420 | 14.7 | 14.0 | 13.4 |
| | | 25+25+25+35+35+35 | 1.88 | 1.88 | 1.88 | 2.63 | 2.63 | 2.63 | 4.5 | 13.5 | 14.0 | 1150 | 3230 | 3420 | 14.7 | 14.1 | 13.5 |
| | | 25+25+25+35+35+50 | 1.73 | 1.73 | 1.73 | 2.42 | 2.42 | 3.46 | 4.5 | 13.5 | 14.0 | 1150 | 3220 | 3420 | 14.7 | 14.0 | 13.4 |
| | | 25+25+35+35+35+35 | 1.78 | 1.78 | 2.49 | 2.49 | 2.49 | 2.49 | 4.5 | 13.5 | 14.0 | 1150 | 3230 | 3420 | 14.7 | 14.1 | 13.5 |

| Indoor unit combination | | | Cooling capacity (kW) | | | | | | | | | Power consumption(W) | | | Standard current(A) | | |
|---|---|---|---|---|---|---|---|---|---|---|---|---|---|---|---|---|---|
| | | | Room cooling capacity | | | | | | Total capacity | | | Min. | Standard | Max. | 220V | 230V | 240V |
| | | | A | B | C | D | E | F | Min. | Standard | Max. | | | | | | |
| Cooling operation | 1 room | 20 | 2.0 | - | - | - | - | - | 1.8 | 2.0 | 2.8 | 650 | 750 | 1100 | 3.4 | 3.3 | 3.2 |
| | | 25 | 2.5 | - | - | - | - | - | 1.8 | 2.5 | 3.4 | 650 | 950 | 1350 | 4.4 | 4.2 | 4.0 |
| | | 35 | 3.5 | - | - | - | - | - | 1.8 | 3.5 | 3.9 | 650 | 1400 | 1600 | 6.4 | 6.1 | 5.9 |
| | | 50 | 5.0 | - | - | - | - | - | 1.8 | 5.0 | 6.1 | 650 | 2000 | 2500 | 9.2 | 8.8 | 8.4 |
| | | 60 | 6.0 | - | - | - | - | - | 1.8 | 6.0 | 7.0 | 650 | 2450 | 3000 | 11.2 | 10.8 | 10.3 |
| | 2 room | 20+20 | 2.00 | 2.00 | - | - | - | - | 3.0 | 4.0 | 5.6 | 740 | 910 | 1460 | 4.2 | 4.0 | 3.8 |
| | | 20+25 | 2.00 | 2.50 | - | - | - | - | 3.0 | 4.5 | 6.2 | 740 | 1050 | 1820 | 4.8 | 4.6 | 4.4 |
| | | 20+35 | 2.00 | 3.50 | - | - | - | - | 3.0 | 5.5 | 6.7 | 740 | 1430 | 2020 | 6.6 | 6.3 | 6.0 |
| | | 20+50 | 2.00 | 5.00 | - | - | - | - | 3.0 | 7.0 | 8.9 | 740 | 2180 | 2820 | 10.0 | 9.6 | 9.2 |
| | | 20+60 | 2.00 | 6.00 | - | - | - | - | 3.0 | 8.0 | 9.8 | 740 | 2530 | 3360 | 11.6 | 11.1 | 10.6 |
| | | 25+25 | 2.50 | 2.50 | - | - | - | - | 3.0 | 5.0 | 6.8 | 740 | 1350 | 2200 | 6.2 | 5.9 | 5.7 |

R410A

# MULTI-SPLIT SYSTEM

| Indoor unit combination | | | Cooling capacity (kW) | | | | | | | | | Power consumption(W) | | | Standard current(A) | | |
|---|---|---|---|---|---|---|---|---|---|---|---|---|---|---|---|---|---|
| | | | Room cooling capacity | | | | | | Total capacity | | | Min. | Standard | Max. | 220V | 230V | 240V |
| | | | A | B | C | D | E | F | Min. | Standard | Max. | | | | | | |
| Cooling operation | 2 room | 25+35 | 2.50 | 3.50 | - | - | - | - | 3.0 | 6.0 | 7.3 | 740 | 1720 | 2320 | 7.9 | 7.6 | 7.2 |
| | | 25+50 | 2.50 | 5.00 | - | - | - | - | 3.0 | 7.5 | 9.5 | 740 | 2350 | 3220 | 10.8 | 10.3 | 9.9 |
| | | 25+60 | 2.50 | 6.00 | - | - | - | - | 3.0 | 8.5 | 9.8 | 740 | 2680 | 3360 | 12.3 | 11.8 | 11.3 |
| | | 35+35 | 3.50 | 3.50 | - | - | - | - | 3.0 | 7.0 | 7.8 | 740 | 2180 | 2820 | 10.0 | 9.6 | 9.2 |
| | | 35+50 | 3.50 | 5.00 | - | - | - | - | 3.0 | 8.5 | 10.0 | 740 | 2680 | 3620 | 12.3 | 11.8 | 11.3 |
| | | 35+60 | 3.50 | 6.00 | - | - | - | - | 3.0 | 9.5 | 10.9 | 740 | 3120 | 3990 | 14.3 | 13.7 | 13.1 |
| | | 50+50 | 5.00 | 5.00 | - | - | - | - | 3.0 | 10.0 | 12.2 | 740 | 3350 | 4450 | 15.4 | 14.7 | 14.1 |
| | | 50+60 | 5.00 | 6.00 | - | - | - | - | 3.0 | 11.0 | 12.5 | 740 | 3685 | 4520 | 16.9 | 16.2 | 15.5 |
| | | 60+60 | 6.00 | 6.00 | - | - | - | - | 3.0 | 12.0 | 12.5 | 740 | 4200 | 4520 | 19.3 | 18.4 | 17.7 |
| | 3 room | 20+20+20 | 2.00 | 2.00 | 2.00 | - | - | - | 3.7 | 6.0 | 8.4 | 880 | 1460 | 2560 | 6.7 | 6.4 | 6.1 |
| | | 20+20+25 | 2.00 | 2.00 | 2.50 | - | - | - | 3.7 | 6.5 | 9.0 | 880 | 1650 | 2700 | 7.6 | 7.2 | 6.9 |
| | | 20+20+35 | 2.00 | 2.00 | 3.50 | - | - | - | 3.7 | 7.5 | 9.5 | 880 | 1980 | 3120 | 9.1 | 8.7 | 8.3 |
| | | 20+20+50 | 2.00 | 2.00 | 5.00 | - | - | - | 3.7 | 9.0 | 11.7 | 880 | 2600 | 4120 | 11.9 | 11.4 | 10.9 |
| | | 20+20+60 | 2.00 | 2.00 | 6.00 | - | - | - | 3.7 | 10.0 | 12.6 | 880 | 3120 | 4680 | 14.3 | 13.7 | 13.1 |
| | | 20+25+25 | 2.00 | 2.50 | 2.50 | - | - | - | 3.7 | 7.0 | 9.6 | 880 | 1850 | 3210 | 8.5 | 8.1 | 7.8 |
| | | 20+25+35 | 2.00 | 2.50 | 3.50 | - | - | - | 3.7 | 8.0 | 10.1 | 880 | 2320 | 3630 | 10.7 | 10.2 | 9.8 |
| | | 20+25+50 | 2.00 | 2.50 | 5.00 | - | - | - | 3.7 | 9.5 | 12.3 | 880 | 2980 | 4510 | 13.7 | 13.1 | 12.5 |
| | | 20+25+60 | 2.00 | 2.50 | 6.00 | - | - | - | 3.7 | 10.5 | 12.8 | 880 | 3590 | 4800 | 16.5 | 15.8 | 15.1 |
| | | 20+35+35 | 2.00 | 3.50 | 3.50 | - | - | - | 3.7 | 9.0 | 10.6 | 880 | 2780 | 4120 | 12.8 | 12.2 | 11.7 |
| | | 20+35+50 | 2.00 | 3.50 | 5.00 | - | - | - | 3.7 | 10.5 | 12.8 | 880 | 3590 | 4800 | 16.5 | 15.8 | 15.1 |
| | | 20+35+60 | 2.00 | 3.50 | 6.00 | - | - | - | 3.7 | 11.5 | 12.8 | 880 | 3950 | 4800 | 18.1 | 17.3 | 16.6 |
| | | 20+50+50 | 2.00 | 5.00 | 5.00 | - | - | - | 3.7 | 12.0 | 12.8 | 880 | 4230 | 4800 | 19.4 | 18.6 | 17.8 |
| | | 20+50+60 | 1.92 | 4.81 | 5.77 | - | - | - | 3.7 | 12.5 | 12.8 | 880 | 4450 | 4800 | 20.4 | 19.5 | 18.7 |
| | | 20+60+60 | 1.79 | 5.36 | 5.36 | - | - | - | 3.7 | 12.5 | 12.8 | 880 | 4450 | 4800 | 20.4 | 19.5 | 18.7 |
| | | 25+25+25 | 2.50 | 2.50 | 2.50 | - | - | - | 3.7 | 7.5 | 10.2 | 880 | 2030 | 3640 | 9.3 | 8.9 | 8.5 |
| | | 25+25+35 | 2.50 | 2.50 | 3.50 | - | - | - | 3.7 | 8.5 | 10.7 | 880 | 2520 | 3900 | 11.6 | 11.1 | 10.6 |
| | | 25+25+50 | 2.50 | 2.50 | 5.00 | - | - | - | 3.7 | 10.0 | 12.8 | 880 | 3260 | 4800 | 15.0 | 14.3 | 13.7 |
| | | 25+25+60 | 2.50 | 2.50 | 6.00 | - | - | - | 3.7 | 11.0 | 12.8 | 880 | 3720 | 4800 | 17.1 | 16.3 | 15.7 |
| | | 25+35+35 | 2.50 | 3.50 | 3.50 | - | - | - | 3.7 | 9.5 | 11.2 | 880 | 2980 | 4510 | 13.7 | 13.1 | 12.5 |
| | | 25+35+50 | 2.50 | 3.50 | 5.00 | - | - | - | 3.7 | 11.0 | 12.8 | 880 | 3720 | 4800 | 17.1 | 16.3 | 15.7 |
| | | 25+35+60 | 2.50 | 3.50 | 6.00 | - | - | - | 3.7 | 12.0 | 12.8 | 880 | 4230 | 4800 | 19.4 | 18.6 | 17.8 |
| | | 25+50+50 | 2.50 | 5.00 | 5.00 | - | - | - | 3.7 | 12.5 | 12.8 | 880 | 4450 | 4800 | 20.4 | 19.5 | 18.7 |
| | | 25+50+60 | 2.31 | 4.63 | 5.56 | - | - | - | 3.7 | 12.5 | 12.8 | 880 | 4450 | 4800 | 20.4 | 19.5 | 18.7 |
| | | 25+60+60 | 2.16 | 5.17 | 5.17 | - | - | - | 3.7 | 12.5 | 12.8 | 880 | 4450 | 4800 | 20.4 | 19.5 | 18.7 |
| | | 35+35+35 | 3.50 | 3.50 | 3.50 | - | - | - | 3.7 | 10.5 | 11.7 | 880 | 3590 | 4180 | 16.5 | 15.8 | 15.1 |
| | | 35+35+50 | 3.50 | 3.50 | 5.00 | - | - | - | 3.7 | 12.0 | 12.8 | 880 | 4230 | 4800 | 19.4 | 18.6 | 17.8 |
| | | 35+35+60 | 3.37 | 3.37 | 5.77 | - | - | - | 3.7 | 12.5 | 12.8 | 880 | 4450 | 4800 | 20.4 | 19.5 | 18.7 |
| | | 35+50+50 | 3.24 | 4.63 | 4.63 | - | - | - | 3.7 | 12.5 | 12.8 | 880 | 4450 | 4800 | 20.4 | 19.5 | 18.7 |
| | | 35+50+60 | 3.02 | 4.31 | 5.17 | - | - | - | 3.7 | 12.5 | 12.8 | 880 | 4450 | 4800 | 20.2 | 19.3 | 18.5 |
| | | 35+60+60 | 2.82 | 4.84 | 4.84 | - | - | - | 3.7 | 12.5 | 12.8 | 880 | 4450 | 4800 | 20.2 | 19.3 | 18.5 |
| | | 50+50+50 | 4.17 | 4.17 | 4.17 | - | - | - | 3.7 | 12.5 | 12.8 | 880 | 4440 | 4800 | 20.4 | 19.5 | 18.7 |
| | | 50+50+60 | 3.91 | 3.91 | 4.69 | - | - | - | 3.7 | 12.5 | 12.8 | 880 | 4440 | 4800 | 20.4 | 19.5 | 18.7 |
| | | 50+60+60 | 3.68 | 4.41 | 4.41 | - | - | - | 3.7 | 12.5 | 12.8 | 880 | 4430 | 4800 | 20.3 | 19.5 | 18.6 |
| | | 60+60+60 | 4.17 | 4.17 | 4.17 | - | - | - | 3.7 | 12.5 | 12.8 | 880 | 4430 | 4800 | 20.3 | 19.5 | 18.6 |
| | 4 room | 20+20+20+20 | 2.00 | 2.00 | 2.00 | 2.00 | - | - | 4.4 | 8.0 | 11.2 | 1100 | 2050 | 3680 | 9.3 | 8.9 | 8.6 |
| | | 20+20+20+25 | 2.00 | 2.00 | 2.00 | 2.50 | - | - | 4.4 | 8.5 | 11.8 | 1100 | 2320 | 3890 | 10.6 | 10.1 | 9.7 |
| | | 20+20+20+35 | 2.00 | 2.00 | 2.00 | 3.50 | - | - | 4.4 | 9.5 | 12.3 | 1100 | 2820 | 4530 | 12.8 | 12.3 | 11.8 |
| | | 20+20+20+50 | 2.00 | 2.00 | 2.00 | 5.00 | - | - | 4.4 | 11.0 | 13.0 | 1100 | 3480 | 4800 | 15.8 | 15.1 | 14.5 |
| | | 20+20+20+60 | 2.00 | 2.00 | 2.00 | 6.00 | - | - | 4.4 | 12.0 | 13.0 | 1100 | 3980 | 4800 | 18.1 | 17.3 | 16.6 |
| | | 20+20+25+25 | 2.00 | 2.00 | 2.50 | 2.50 | - | - | 4.4 | 9.0 | 12.4 | 1100 | 2520 | 4590 | 11.5 | 11.0 | 10.5 |
| | | 20+20+25+35 | 2.00 | 2.00 | 2.50 | 3.50 | - | - | 4.4 | 10.0 | 12.9 | 1100 | 3120 | 4780 | 14.2 | 13.6 | 13.0 |
| | | 20+20+25+50 | 2.00 | 2.00 | 2.50 | 5.00 | - | - | 4.4 | 11.5 | 13.0 | 1100 | 3720 | 4800 | 16.9 | 16.2 | 15.5 |
| | | 20+20+25+60 | 2.00 | 2.00 | 2.50 | 6.00 | - | - | 4.4 | 12.5 | 13.0 | 1100 | 4600 | 4800 | 20.9 | 20.0 | 19.2 |
| | | 20+20+35+35 | 2.00 | 2.00 | 3.50 | 3.50 | - | - | 4.4 | 11.0 | 13.0 | 1100 | 3480 | 4800 | 15.8 | 15.1 | 14.5 |
| | | 20+20+35+50 | 2.00 | 2.00 | 3.50 | 5.00 | - | - | 4.4 | 12.5 | 13.0 | 1100 | 4600 | 4800 | 20.9 | 20.0 | 19.2 |
| | | 20+20+35+60 | 1.85 | 1.85 | 3.24 | 5.56 | - | - | 4.4 | 12.5 | 13.0 | 1100 | 4590 | 4800 | 20.9 | 20.0 | 19.1 |
| | | 20+20+50+50 | 1.79 | 1.79 | 4.46 | 4.46 | - | - | 4.4 | 12.5 | 13.0 | 1100 | 4590 | 4800 | 20.9 | 20.0 | 19.1 |
| | | 20+20+50+60 | 1.67 | 1.67 | 4.17 | 5.00 | - | - | 4.4 | 12.5 | 13.0 | 1100 | 4590 | 4800 | 20.9 | 20.0 | 19.1 |
| | | 20+20+60+60 | 1.56 | 1.56 | 4.69 | 4.69 | - | - | 4.4 | 12.5 | 13.0 | 1100 | 4580 | 4800 | 20.8 | 19.9 | 19.1 |
| | | 20+25+25+25 | 2.00 | 2.50 | 2.50 | 2.50 | - | - | 4.4 | 9.5 | 13.0 | 1100 | 2820 | 4800 | 12.8 | 12.3 | 11.8 |
| | | 20+25+25+35 | 2.00 | 2.50 | 2.50 | 3.50 | - | - | 4.4 | 10.5 | 13.0 | 1100 | 3340 | 4800 | 15.2 | 14.5 | 13.9 |
| | | 20+25+25+50 | 2.00 | 2.50 | 2.50 | 5.00 | - | - | 4.4 | 12.0 | 13.0 | 1100 | 3980 | 4800 | 18.1 | 17.3 | 16.6 |
| | | 20+25+25+60 | 1.92 | 2.40 | 2.40 | 5.77 | - | - | 4.4 | 12.5 | 13.0 | 1100 | 4600 | 4800 | 20.9 | 20.0 | 19.2 |
| | | 20+25+35+35 | 2.00 | 2.50 | 3.50 | 3.50 | - | - | 4.4 | 11.5 | 13.0 | 1100 | 3720 | 4800 | 16.9 | 16.2 | 15.5 |
| | | 20+25+35+50 | 1.92 | 2.40 | 3.37 | 4.81 | - | - | 4.4 | 12.5 | 13.0 | 1100 | 4600 | 4800 | 20.9 | 20.0 | 19.2 |
| | | 20+25+35+60 | 1.79 | 2.23 | 3.13 | 5.36 | - | - | 4.4 | 12.5 | 13.0 | 1100 | 4590 | 4800 | 20.9 | 20.0 | 19.1 |
| | | 20+25+50+50 | 1.72 | 2.16 | 4.31 | 4.31 | - | - | 4.4 | 12.5 | 13.0 | 1100 | 4590 | 4800 | 20.9 | 20.0 | 19.1 |
| | | 20+25+50+60 | 1.61 | 2.02 | 4.03 | 4.84 | - | - | 4.4 | 12.5 | 13.0 | 1100 | 4580 | 4800 | 20.8 | 19.9 | 19.1 |
| | | 20+25+60+60 | 1.52 | 1.89 | 4.55 | 4.55 | - | - | 4.4 | 12.5 | 13.0 | 1100 | 4580 | 4800 | 20.8 | 19.9 | 19.1 |
| | | 20+35+35+35 | 2.00 | 3.50 | 3.50 | 3.50 | - | - | 4.4 | 12.5 | 13.0 | 1100 | 4600 | 4800 | 20.9 | 20.0 | 19.2 |
| | | 20+35+35+50 | 1.79 | 3.13 | 3.13 | 4.46 | - | - | 4.4 | 12.5 | 13.0 | 1100 | 4590 | 4800 | 20.9 | 20.0 | 19.1 |
| | | 20+35+35+60 | 1.67 | 2.92 | 2.92 | 5.00 | - | - | 4.4 | 12.5 | 13.0 | 1100 | 4590 | 4800 | 20.9 | 20.0 | 19.1 |
| | | 20+35+50+50 | 1.61 | 2.82 | 4.03 | 4.03 | - | - | 4.4 | 12.5 | 13.0 | 1100 | 4580 | 4800 | 20.8 | 19.9 | 19.1 |
| | | 20+35+50+60 | 1.52 | 2.65 | 3.79 | 4.55 | - | - | 4.4 | 12.5 | 13.0 | 1100 | 4580 | 4800 | 20.8 | 19.9 | 19.1 |
| | | 20+35+60+60 | 1.43 | 2.50 | 4.29 | 4.29 | - | - | 5.4 | 12.5 | 13.0 | 1100 | 4570 | 4801 | 20.6 | 19.7 | 18.9 |
| | | 20+50+50+50 | 1.47 | 3.68 | 3.68 | 3.68 | - | - | 4.4 | 12.5 | 13.0 | 1100 | 4580 | 4800 | 20.8 | 19.9 | 19.1 |
| | | 20+50+50+60 | 1.39 | 3.47 | 3.47 | 4.17 | - | - | 4.4 | 12.5 | 13.0 | 1100 | 4570 | 4800 | 20.8 | 19.9 | 19.1 |

| Indoor unit combination | | | Cooling capacity (kW) | | | | | | | | | Power consumption(W) | | | Standard current(A) | | |
|---|---|---|---|---|---|---|---|---|---|---|---|---|---|---|---|---|---|
| | | | Room cooling capacity | | | | | | Total capacity | | | | | | | | |
| | | | A | B | C | D | E | F | Min. | Standard | Max. | Min. | Standard | Max. | 220V | 230V | 240V |
| Cooling operation | 4 room | 20+50+60+60 | 1.32 | 3.29 | 3.95 | 3.95 | - | - | 4.4 | 12.5 | 13.0 | 1100 | 4560 | 4800 | 20.7 | 19.8 | 19.0 |
| | | 25+25+25+25 | 2.50 | 2.50 | 2.50 | 2.50 | - | - | 4.4 | 10.0 | 13.0 | 1100 | 3120 | 4800 | 14.2 | 13.6 | 13.0 |
| | | 25+25+25+35 | 2.50 | 2.50 | 2.50 | 3.50 | - | - | 4.4 | 11.0 | 13.0 | 1100 | 3480 | 4800 | 15.8 | 15.1 | 14.5 |
| | | 25+25+25+50 | 2.50 | 2.50 | 2.50 | 5.00 | - | - | 4.4 | 12.5 | 13.0 | 1100 | 4600 | 4800 | 20.9 | 20.0 | 19.2 |
| | | 25+25+25+60 | 2.31 | 2.31 | 2.31 | 5.56 | - | - | 4.4 | 12.5 | 13.0 | 1100 | 4590 | 4800 | 20.9 | 20.0 | 19.1 |
| | | 25+25+35+35 | 2.50 | 2.50 | 3.50 | 3.50 | - | - | 4.4 | 12.0 | 13.0 | 1100 | 3980 | 4800 | 18.1 | 17.3 | 16.6 |
| | | 25+25+35+50 | 2.31 | 2.31 | 3.24 | 4.63 | - | - | 4.4 | 12.5 | 13.0 | 1100 | 4590 | 4800 | 20.9 | 20.0 | 19.1 |
| | | 25+25+35+60 | 2.16 | 2.16 | 3.02 | 5.17 | | | 4.4 | 12.5 | 13.0 | 1100 | 4590 | 4800 | 20.9 | 20.0 | 19.1 |
| | | 25+25+50+50 | 2.08 | 2.08 | 4.17 | 4.17 | - | - | 4.4 | 12.5 | 13.0 | 1100 | 4590 | 4800 | 20.9 | 20.0 | 19.1 |
| | | 25+25+50+60 | 1.95 | 1.95 | 3.91 | 4.69 | - | - | 4.4 | 12.5 | 13.0 | 1100 | 4580 | 4800 | 20.8 | 19.9 | 19.1 |
| | | 25+25+60+60 | 1.84 | 1.84 | 4.41 | 4.41 | - | - | 4.4 | 12.5 | 13.0 | 1100 | 4580 | 4800 | 20.8 | 19.9 | 19.1 |
| | | 25+35+35+35 | 2.40 | 3.37 | 3.37 | 3.37 | - | - | 4.4 | 12.5 | 13.0 | 1100 | 4600 | 4800 | 20.9 | 20.0 | 19.2 |
| | | 25+35+35+50 | 2.16 | 3.02 | 3.02 | 4.31 | - | - | 4.4 | 12.5 | 13.0 | 1100 | 4590 | 4800 | 20.9 | 20.0 | 19.1 |
| | | 25+35+35+60 | 2.02 | 2.82 | 2.82 | 4.84 | - | - | 4.4 | 12.5 | 13.0 | 1100 | 4580 | 4800 | 20.8 | 19.9 | 19.1 |
| | | 25+35+50+50 | 1.95 | 2.73 | 3.91 | 3.91 | - | - | 4.4 | 12.5 | 13.0 | 1100 | 4580 | 4800 | 20.8 | 19.9 | 19.1 |
| | | 25+35+50+60 | 1.84 | 2.57 | 3.68 | 4.41 | - | - | 4.4 | 12.5 | 13.0 | 1100 | 4580 | 4800 | 20.8 | 19.9 | 19.1 |
| | | 25+35+60+60 | 1.74 | 2.43 | 4.17 | 4.17 | - | - | 4.4 | 12.5 | 13.0 | 1100 | 4570 | 4800 | 20.8 | 19.9 | 19.1 |
| | | 25+50+50+50 | 1.79 | 3.57 | 3.57 | 3.57 | - | - | 4.4 | 12.5 | 13.0 | 1100 | 4570 | 4800 | 20.8 | 19.9 | 19.1 |
| | | 25+50+50+60 | 1.69 | 3.38 | 3.38 | 4.05 | - | - | 4.4 | 12.5 | 13.0 | 1100 | 4570 | 4800 | 20.8 | 19.9 | 19.1 |
| | | 25+50+60+60 | 1.60 | 3.21 | 3.85 | 3.85 | - | - | 4.4 | 12.5 | 13.0 | 1100 | 4560 | 4800 | 20.7 | 19.8 | 19.0 |
| | | 35+35+35+35 | 3.13 | 3.13 | 3.13 | 3.13 | - | - | 4.4 | 12.5 | 13.0 | 1100 | 4590 | 4800 | 20.9 | 20.0 | 19.1 |
| | | 35+35+35+50 | 2.82 | 2.82 | 2.82 | 4.03 | - | - | 4.4 | 12.5 | 13.0 | 1100 | 4580 | 4800 | 20.8 | 19.9 | 19.1 |
| | | 35+35+35+60 | 2.65 | 2.65 | 2.65 | 4.55 | - | - | 4.4 | 12.5 | 13.0 | 1100 | 4580 | 4800 | 20.8 | 19.9 | 19.1 |
| | | 35+35+50+50 | 2.57 | 2.57 | 3.68 | 3.68 | - | - | 4.4 | 12.5 | 13.0 | 1100 | 4580 | 4800 | 20.8 | 19.9 | 19.1 |
| | | 35+35+50+60 | 2.43 | 2.43 | 3.47 | 4.17 | - | - | 4.4 | 12.5 | 13.0 | 1100 | 4570 | 4800 | 20.8 | 19.9 | 19.1 |
| | | 35+35+60+60 | 2.30 | 2.30 | 3.95 | 3.95 | - | - | 4.4 | 12.5 | 13.0 | 1100 | 4560 | 4800 | 20.7 | 19.8 | 19.0 |
| | | 35+50+50+50 | 2.36 | 3.38 | 3.38 | 3.38 | - | - | 4.4 | 12.5 | 13.0 | 1100 | 4570 | 4800 | 20.8 | 19.9 | 19.1 |
| | | 35+50+50+60 | 2.24 | 3.21 | 3.21 | 3.85 | - | - | 4.4 | 12.5 | 13.0 | 1100 | 4560 | 4800 | 20.7 | 19.8 | 19.0 |
| | 5 room | 20+20+20+20+20 | 2.00 | 2.00 | 2.00 | 2.00 | 2.00 | - | 5.1 | 10.0 | 13.5 | 1210 | 2880 | 4800 | 13.1 | 12.5 | 12.0 |
| | | 20+20+20+20+25 | 2.00 | 2.00 | 2.00 | 2.00 | 2.50 | - | 5.1 | 10.5 | 13.5 | 1210 | 3120 | 4800 | 14.2 | 13.6 | 13.0 |
| | | 20+20+20+20+35 | 2.00 | 2.00 | 2.00 | 2.00 | 3.50 | - | 5.1 | 11.5 | 13.5 | 1210 | 3620 | 4800 | 16.5 | 15.8 | 15.1 |
| | | 20+20+20+20+50 | 1.92 | 1.92 | 1.92 | 1.92 | 4.81 | - | 5.1 | 12.5 | 13.5 | 1210 | 4320 | 4800 | 19.7 | 18.8 | 18.0 |
| | | 20+20+20+20+60 | 1.79 | 1.79 | 1.79 | 1.79 | 5.36 | - | 5.1 | 12.5 | 13.5 | 1210 | 4310 | 4800 | 19.6 | 18.8 | 18.0 |
| | | 20+20+20+25+25 | 2.00 | 2.00 | 2.00 | 2.50 | 2.50 | - | 5.1 | 11.0 | 13.5 | 1210 | 3320 | 4800 | 15.1 | 14.4 | 13.8 |
| | | 20+20+20+25+35 | 2.00 | 2.00 | 2.00 | 2.50 | 3.50 | - | 5.1 | 12.0 | 13.5 | 1210 | 3990 | 4800 | 18.2 | 17.4 | 16.6 |
| | | 20+20+20+25+50 | 1.85 | 1.85 | 1.85 | 2.31 | 4.63 | - | 5.1 | 12.5 | 13.5 | 1210 | 4320 | 4800 | 19.7 | 18.8 | 18.0 |
| | | 20+20+20+25+60 | 1.72 | 1.72 | 1.72 | 2.16 | 5.17 | - | 5.1 | 12.5 | 13.5 | 1210 | 4310 | 4800 | 19.6 | 18.8 | 18.0 |
| | | 20+20+20+35+35 | 1.92 | 1.92 | 1.92 | 3.37 | 3.37 | - | 5.1 | 12.5 | 13.5 | 1210 | 4320 | 4800 | 19.7 | 18.8 | 18.0 |
| | | 20+20+20+35+50 | 1.72 | 1.72 | 1.72 | 3.02 | 4.31 | - | 5.1 | 12.5 | 13.5 | 1210 | 4310 | 4800 | 19.6 | 18.8 | 18.0 |
| | | 20+20+20+35+60 | 1.61 | 1.61 | 1.61 | 2.82 | 4.84 | - | 5.1 | 12.5 | 13.5 | 1210 | 4300 | 4800 | 19.6 | 18.7 | 17.9 |
| | | 20+20+20+50+50 | 1.56 | 1.56 | 1.56 | 3.91 | 3.91 | - | 5.1 | 12.5 | 13.5 | 1210 | 4300 | 4800 | 19.6 | 18.7 | 17.9 |
| | | 20+20+20+50+60 | 1.47 | 1.47 | 1.47 | 3.68 | 4.41 | - | 5.1 | 12.5 | 13.5 | 1210 | 4290 | 4800 | 19.5 | 18.7 | 17.9 |
| | | 20+20+20+60+60 | 1.39 | 1.39 | 1.39 | 4.17 | 4.17 | - | 5.1 | 12.5 | 13.5 | 1210 | 4280 | 4800 | 19.5 | 18.6 | 17.9 |
| | | 20+20+25+25+25 | 2.00 | 2.00 | 2.50 | 2.50 | 2.50 | - | 5.1 | 11.5 | 13.5 | 1210 | 3620 | 4800 | 16.5 | 15.8 | 15.1 |
| | | 20+20+25+25+35 | 2.00 | 2.00 | 2.50 | 2.50 | 3.50 | - | 5.1 | 12.5 | 13.5 | 1210 | 4330 | 4800 | 19.7 | 18.8 | 18.1 |
| | | 20+20+25+25+50 | 1.79 | 1.79 | 2.23 | 2.23 | 4.46 | - | 5.1 | 12.5 | 13.5 | 1210 | 4310 | 4800 | 19.6 | 18.8 | 18.0 |
| | | 20+20+25+25+60 | 1.67 | 1.67 | 2.08 | 2.08 | 5.00 | - | 5.1 | 12.5 | 13.5 | 1210 | 4300 | 4800 | 19.6 | 18.7 | 17.9 |
| | | 20+20+25+35+35 | 1.85 | 1.85 | 2.31 | 3.24 | 3.24 | - | 5.1 | 12.5 | 13.5 | 1210 | 4320 | 4800 | 19.7 | 18.8 | 18.0 |
| | | 20+20+25+35+50 | 1.67 | 1.67 | 2.08 | 2.92 | 4.17 | - | 5.1 | 12.5 | 13.5 | 1210 | 4300 | 4800 | 19.6 | 18.7 | 17.9 |
| | | 20+20+25+35+60 | 1.56 | 1.56 | 1.95 | 2.73 | 4.69 | - | 5.1 | 12.5 | 13.5 | 1210 | 4300 | 4800 | 19.6 | 18.7 | 17.9 |
| | | 20+20+25+50+50 | 1.52 | 1.52 | 1.89 | 3.79 | 3.79 | - | 5.1 | 12.5 | 13.5 | 1210 | 4290 | 4800 | 19.5 | 18.7 | 17.9 |
| | | 20+20+25+50+60 | 1.43 | 1.43 | 1.79 | 3.57 | 4.29 | - | 5.1 | 12.5 | 13.5 | 1210 | 4280 | 4800 | 19.5 | 18.6 | 17.9 |
| | | 20+20+25+60+60 | 1.35 | 1.35 | 1.69 | 4.05 | 4.05 | - | 5.1 | 12.5 | 13.5 | 1210 | 4280 | 4800 | 19.5 | 18.6 | 17.9 |
| | | 20+20+35+35+35 | 1.72 | 1.72 | 3.02 | 3.02 | 3.02 | - | 5.1 | 12.5 | 13.5 | 1210 | 4310 | 4800 | 19.6 | 18.8 | 18.0 |
| | | 20+20+35+35+50 | 1.56 | 1.56 | 2.73 | 2.73 | 3.91 | - | 5.1 | 12.5 | 13.5 | 1210 | 4300 | 4800 | 19.6 | 18.7 | 17.9 |
| | | 20+20+35+35+60 | 1.47 | 1.47 | 2.57 | 2.57 | 4.41 | - | 5.1 | 12.5 | 13.5 | 1210 | 4290 | 4800 | 19.5 | 18.7 | 17.9 |
| | | 20+20+35+50+50 | 1.43 | 1.43 | 2.50 | 3.57 | 3.57 | - | 5.1 | 12.5 | 13.5 | 1210 | 4280 | 4800 | 19.5 | 18.6 | 17.9 |
| | | 20+20+35+50+60 | 1.35 | 1.35 | 2.36 | 3.38 | 4.05 | - | 5.1 | 12.5 | 13.5 | 1210 | 4280 | 4800 | 19.5 | 18.6 | 17.9 |
| | | 20+20+35+60+60 | 1.28 | 1.28 | 2.24 | 3.85 | 3.85 | - | 5.1 | 12.5 | 13.5 | 1210 | 4270 | 4800 | 19.4 | 18.6 | 17.8 |
| | | 20+20+50+50+50 | 1.32 | 1.32 | 3.29 | 3.29 | 3.29 | - | 5.1 | 12.5 | 13.5 | 1210 | 4270 | 4800 | 19.4 | 18.6 | 17.8 |
| | | 20+25+25+25+25 | 2.00 | 2.50 | 2.50 | 2.50 | 2.50 | - | 5.1 | 12.0 | 13.5 | 1210 | 3990 | 4800 | 18.2 | 17.4 | 16.6 |
| | | 20+25+25+25+35 | 1.92 | 2.40 | 2.40 | 2.40 | 3.37 | - | 5.1 | 12.5 | 13.5 | 1210 | 4320 | 4800 | 19.7 | 18.8 | 18.0 |
| | | 20+25+25+25+50 | 1.72 | 2.16 | 2.16 | 2.16 | 4.31 | - | 5.1 | 12.5 | 13.5 | 1210 | 4310 | 4800 | 19.6 | 18.8 | 18.0 |
| | | 20+25+25+25+60 | 1.61 | 2.02 | 2.02 | 2.02 | 4.84 | - | 5.1 | 12.5 | 13.5 | 1210 | 4300 | 4800 | 19.6 | 18.7 | 17.9 |
| | | 20+25+25+35+35 | 1.79 | 2.23 | 2.23 | 3.13 | 3.13 | - | 5.1 | 12.5 | 13.5 | 1210 | 4310 | 4800 | 19.6 | 18.8 | 18.0 |
| | | 20+25+25+35+50 | 1.61 | 2.02 | 2.02 | 2.82 | 4.03 | - | 5.1 | 12.5 | 13.5 | 1210 | 4300 | 4800 | 19.6 | 18.7 | 17.9 |
| | | 20+25+25+35+60 | 1.52 | 1.89 | 1.89 | 2.65 | 4.55 | - | 5.1 | 12.5 | 13.5 | 1210 | 4290 | 4800 | 19.5 | 18.7 | 17.9 |
| | | 20+25+25+50+50 | 1.47 | 1.84 | 1.84 | 3.68 | 3.68 | - | 5.1 | 12.5 | 13.5 | 1210 | 4290 | 4800 | 19.5 | 18.7 | 17.9 |
| | | 20+25+25+50+60 | 1.39 | 1.74 | 1.74 | 3.47 | 4.17 | - | 5.1 | 12.5 | 13.5 | 1210 | 4280 | 4800 | 19.5 | 18.6 | 17.9 |
| | | 20+25+25+60+60 | 1.32 | 1.64 | 1.64 | 3.95 | 3.95 | - | 5.1 | 12.5 | 13.5 | 1210 | 4270 | 4800 | 19.4 | 18.6 | 17.8 |
| | | 20+25+35+35+35 | 1.67 | 2.08 | 2.92 | 2.92 | 2.92 | - | 5.1 | 12.5 | 13.5 | 1210 | 4300 | 4800 | 19.6 | 18.7 | 17.9 |
| | | 20+25+35+35+50 | 1.52 | 1.89 | 2.65 | 2.65 | 3.79 | - | 5.1 | 12.5 | 13.5 | 1210 | 4290 | 4800 | 19.5 | 18.7 | 17.9 |
| | | 20+25+35+35+60 | 1.43 | 1.79 | 2.50 | 2.50 | 4.29 | - | 5.1 | 12.5 | 13.5 | 1210 | 4280 | 4800 | 19.5 | 18.6 | 17.9 |
| | | 20+25+35+50+50 | 1.39 | 1.74 | 2.43 | 3.47 | 3.47 | - | 5.1 | 12.5 | 13.5 | 1210 | 4280 | 4800 | 19.5 | 18.6 | 17.9 |
| | | 20+25+35+50+60 | 1.32 | 1.64 | 2.30 | 3.29 | 3.95 | - | 5.1 | 12.5 | 13.5 | 1210 | 4270 | 4800 | 19.4 | 18.6 | 17.8 |
| | | 20+25+50+50+50 | 1.28 | 1.60 | 3.21 | 3.21 | 3.21 | - | 5.1 | 12.5 | 13.5 | 1210 | 4270 | 4800 | 19.4 | 18.6 | 17.8 |
| | | 20+35+35+35+35 | 1.56 | 2.73 | 2.73 | 2.73 | 2.73 | - | 5.1 | 12.5 | 13.5 | 1210 | 4300 | 4800 | 19.6 | 18.7 | 17.9 |

R410A

# MULTI-SPLIT SYSTEM

| Indoor unit combination | | Cooling capacity (kW) | | | | | | | | | Power consumption(W) | | | Standard current(A) | | |
|---|---|---|---|---|---|---|---|---|---|---|---|---|---|---|---|---|
| | | Room cooling capacity | | | | | | Total capacity | | | | | | | | |
| | | A | B | C | D | E | F | Min. | Standard | Max. | Min. | Standard | Max. | 220V | 230V | 240V |
| 5 room | 20+35+35+35+50 | 1.43 | 2.50 | 2.50 | 2.50 | 3.57 | - | 5.1 | 12.5 | 13.5 | 1210 | 4280 | 4800 | 19.5 | 18.6 | 17.9 |
| | 20+35+35+35+60 | 1.35 | 2.36 | 2.36 | 2.36 | 4.05 | - | 5.1 | 12.5 | 13.5 | 1210 | 4280 | 4800 | 19.5 | 18.6 | 17.9 |
| | 20+35+35+50+50 | 1.32 | 2.30 | 2.30 | 3.29 | 3.29 | - | 5.1 | 12.5 | 13.5 | 1210 | 4270 | 4800 | 19.4 | 18.6 | 17.8 |
| | 25+25+25+25+25 | 2.50 | 2.50 | 2.50 | 2.50 | 2.50 | - | 5.1 | 12.5 | 13.5 | 1210 | 4330 | 4800 | 19.7 | 18.8 | 18.1 |
| | 25+25+25+25+35 | 2.31 | 2.31 | 2.31 | 2.31 | 3.24 | - | 5.1 | 12.5 | 13.5 | 1210 | 4320 | 4800 | 19.7 | 18.8 | 18.0 |
| | 25+25+25+25+50 | 2.08 | 2.08 | 2.08 | 2.08 | 4.17 | - | 5.1 | 12.5 | 13.5 | 1210 | 4300 | 4800 | 19.6 | 18.7 | 17.9 |
| | 25+25+25+25+60 | 1.95 | 1.95 | 1.95 | 1.95 | 4.69 | - | 5.1 | 12.5 | 13.5 | 1210 | 4300 | 4800 | 19.6 | 18.7 | 17.9 |
| | 25+25+25+35+35 | 2.16 | 2.16 | 2.16 | 3.02 | 3.02 | - | 5.1 | 12.5 | 13.5 | 1210 | 4310 | 4800 | 19.6 | 18.8 | 18.0 |
| | 25+25+25+35+50 | 1.95 | 1.95 | 1.95 | 2.73 | 3.91 | - | 5.1 | 12.5 | 13.5 | 1210 | 4300 | 4800 | 19.6 | 18.7 | 17.9 |
| | 25+25+25+35+60 | 1.84 | 1.84 | 1.84 | 2.57 | 4.41 | - | 5.1 | 12.5 | 13.5 | 1210 | 4290 | 4800 | 19.5 | 18.7 | 17.9 |
| | 25+25+25+50+50 | 1.79 | 1.79 | 1.79 | 3.57 | 3.57 | - | 5.1 | 12.5 | 13.5 | 1210 | 4280 | 4800 | 19.5 | 18.6 | 17.9 |
| | 25+25+25+50+60 | 1.69 | 1.69 | 1.69 | 3.38 | 4.05 | - | 5.1 | 12.5 | 13.5 | 1210 | 4280 | 4800 | 19.5 | 18.6 | 17.9 |
| | 25+25+25+60+60 | 1.60 | 1.60 | 1.60 | 3.85 | 3.85 | - | 5.1 | 12.5 | 13.5 | 1210 | 4270 | 4800 | 19.4 | 18.6 | 17.8 |
| | 25+25+35+35+35 | 2.02 | 2.02 | 2.82 | 2.82 | 2.82 | - | 5.1 | 12.5 | 13.5 | 1210 | 4300 | 4800 | 19.6 | 18.7 | 17.9 |
| | 25+25+35+35+50 | 1.84 | 1.84 | 2.57 | 2.57 | 3.68 | - | 5.1 | 12.5 | 13.5 | 1210 | 4290 | 4800 | 19.5 | 18.7 | 17.9 |
| | 25+25+35+35+60 | 1.74 | 1.74 | 2.43 | 2.43 | 4.17 | - | 5.1 | 12.5 | 13.5 | 1210 | 4280 | 4800 | 19.5 | 18.6 | 17.9 |
| | 25+25+35+50+50 | 1.69 | 1.69 | 2.36 | 3.38 | 3.38 | - | 5.1 | 12.5 | 13.5 | 1210 | 4280 | 4800 | 19.5 | 18.6 | 17.9 |
| | 25+25+35+50+60 | 1.60 | 1.60 | 2.24 | 3.21 | 3.85 | - | 5.1 | 12.5 | 13.5 | 1210 | 4270 | 4800 | 19.4 | 18.6 | 17.8 |
| | 25+35+35+35+35 | 1.89 | 2.65 | 2.65 | 2.65 | 2.65 | - | 5.1 | 12.5 | 13.5 | 1210 | 4290 | 4800 | 19.5 | 18.7 | 17.9 |
| | 25+35+35+35+50 | 1.74 | 2.43 | 2.43 | 2.43 | 3.47 | - | 5.1 | 12.5 | 13.5 | 1210 | 4280 | 4800 | 19.5 | 18.6 | 17.9 |
| | 25+35+35+35+60 | 1.64 | 2.30 | 2.30 | 2.30 | 3.95 | - | 5.1 | 12.5 | 13.5 | 1210 | 4270 | 4800 | 19.4 | 18.6 | 17.8 |
| | 25+35+35+50+50 | 1.60 | 2.24 | 2.24 | 3.21 | 3.21 | - | 5.1 | 12.5 | 13.5 | 1210 | 4270 | 4800 | 19.4 | 18.6 | 17.8 |
| | 35+35+35+35+35 | 2.50 | 2.50 | 2.50 | 2.50 | 2.50 | - | 5.1 | 12.5 | 13.5 | 1210 | 4280 | 4800 | 19.5 | 18.6 | 17.9 |
| | 35+35+35+35+50 | 2.30 | 2.30 | 2.30 | 2.30 | 3.29 | - | 5.1 | 12.5 | 13.5 | 1210 | 4270 | 4800 | 19.4 | 18.6 | 17.8 |
| Cooling operation 6 room | 20+20+20+20+20+20 | 2.00 | 2.00 | 2.00 | 2.00 | 2.00 | 2.00 | 5.5 | 12.0 | 13.8 | 1280 | 3660 | 4620 | 16.7 | 15.9 | 15.3 |
| | 20+20+20+20+20+25 | 2.00 | 2.00 | 2.00 | 2.00 | 2.00 | 2.50 | 5.5 | 12.5 | 14.0 | 1280 | 3900 | 4800 | 17.7 | 17.0 | 16.3 |
| | 20+20+20+20+20+35 | 1.85 | 1.85 | 1.85 | 1.85 | 1.85 | 3.24 | 5.5 | 12.5 | 14.0 | 1280 | 3890 | 4800 | 17.7 | 16.9 | 16.2 |
| | 20+20+20+20+20+50 | 1.67 | 1.67 | 1.67 | 1.67 | 1.67 | 4.17 | 5.5 | 12.5 | 14.0 | 1280 | 3860 | 4800 | 17.6 | 16.8 | 16.1 |
| | 20+20+20+20+20+60 | 1.56 | 1.56 | 1.56 | 1.56 | 1.56 | 4.69 | 5.5 | 12.5 | 14.0 | 1280 | 3860 | 4800 | 17.6 | 16.8 | 16.1 |
| | 20+20+20+20+25+25 | 1.92 | 1.92 | 1.92 | 1.92 | 2.40 | 2.40 | 5.5 | 12.5 | 14.0 | 1280 | 3900 | 4800 | 17.7 | 17.0 | 16.3 |
| | 20+20+20+20+25+35 | 1.79 | 1.79 | 1.79 | 1.79 | 2.23 | 3.13 | 5.5 | 12.5 | 14.0 | 1280 | 3880 | 4800 | 17.7 | 16.9 | 16.2 |
| | 20+20+20+20+25+50 | 1.61 | 1.61 | 1.61 | 1.61 | 2.02 | 4.03 | 5.5 | 12.5 | 14.0 | 1280 | 3860 | 4800 | 17.6 | 16.8 | 16.1 |
| | 20+20+20+20+25+60 | 1.52 | 1.52 | 1.52 | 1.52 | 1.89 | 4.55 | 5.5 | 12.5 | 14.0 | 1280 | 3850 | 4800 | 17.5 | 16.8 | 16.1 |
| | 20+20+20+20+35+35 | 1.67 | 1.67 | 1.67 | 1.67 | 2.92 | 2.92 | 5.5 | 12.5 | 14.0 | 1280 | 3860 | 4800 | 17.6 | 16.8 | 16.1 |
| | 20+20+20+20+35+50 | 1.52 | 1.52 | 1.52 | 1.52 | 2.65 | 3.79 | 5.5 | 12.5 | 14.0 | 1280 | 3850 | 4800 | 17.5 | 16.8 | 16.1 |
| | 20+20+20+20+35+60 | 1.43 | 1.43 | 1.43 | 1.43 | 2.50 | 4.29 | 5.5 | 12.5 | 14.0 | 1280 | 3830 | 4800 | 17.4 | 16.7 | 16.0 |
| | 20+20+20+20+50+50 | 1.39 | 1.39 | 1.39 | 1.39 | 3.47 | 3.47 | 5.5 | 12.5 | 14.0 | 1280 | 3820 | 4800 | 17.4 | 16.6 | 15.9 |
| | 20+20+20+20+50+60 | 1.32 | 1.32 | 1.32 | 1.32 | 3.29 | 3.95 | 5.5 | 12.5 | 14.0 | 1280 | 3800 | 4800 | 17.3 | 16.5 | 15.8 |
| | 20+20+20+25+25+25 | 1.85 | 1.85 | 1.85 | 2.31 | 2.31 | 2.31 | 5.5 | 12.5 | 14.0 | 1280 | 3890 | 4800 | 17.7 | 16.9 | 16.2 |
| | 20+20+20+25+25+35 | 1.72 | 1.72 | 1.72 | 2.16 | 2.16 | 3.02 | 5.5 | 12.5 | 14.0 | 1280 | 3870 | 4800 | 17.6 | 16.8 | 16.1 |
| | 20+20+20+25+25+50 | 1.56 | 1.56 | 1.56 | 1.95 | 1.95 | 3.91 | 5.5 | 12.5 | 14.0 | 1280 | 3860 | 4800 | 17.6 | 16.8 | 16.1 |
| | 20+20+20+25+25+60 | 1.47 | 1.47 | 1.47 | 1.84 | 1.84 | 4.41 | 5.5 | 12.5 | 14.0 | 1280 | 3840 | 4800 | 17.5 | 16.7 | 16.0 |
| | 20+20+20+25+35+35 | 1.61 | 1.61 | 1.61 | 2.02 | 2.82 | 2.82 | 5.5 | 12.5 | 14.0 | 1280 | 3860 | 4800 | 17.6 | 16.8 | 16.1 |
| | 20+20+20+25+35+50 | 1.47 | 1.47 | 1.47 | 1.84 | 2.57 | 3.68 | 5.5 | 12.5 | 14.0 | 1280 | 3840 | 4800 | 17.5 | 16.7 | 16.0 |
| | 20+20+20+25+35+60 | 1.39 | 1.39 | 1.39 | 1.74 | 2.43 | 4.17 | 5.5 | 12.5 | 14.0 | 1280 | 3820 | 4800 | 17.4 | 16.6 | 15.9 |
| | 20+20+20+25+50+50 | 1.35 | 1.35 | 1.35 | 1.69 | 3.38 | 3.38 | 5.5 | 12.5 | 14.0 | 1280 | 3810 | 4800 | 17.3 | 16.6 | 15.9 |
| | 20+20+20+25+50+60 | 1.28 | 1.28 | 1.28 | 1.60 | 3.21 | 3.85 | 5.5 | 12.5 | 14.0 | 1280 | 3800 | 4800 | 17.3 | 16.5 | 15.8 |
| | 20+20+20+35+35+35 | 1.52 | 1.52 | 1.52 | 2.65 | 2.65 | 2.65 | 5.5 | 12.5 | 14.0 | 1280 | 3850 | 4800 | 17.5 | 16.8 | 16.1 |
| | 20+20+20+35+35+50 | 1.39 | 1.39 | 1.39 | 2.43 | 2.43 | 3.47 | 5.5 | 12.5 | 14.0 | 1280 | 3820 | 4800 | 17.4 | 16.6 | 15.9 |
| | 20+20+20+35+35+60 | 1.32 | 1.32 | 1.32 | 2.30 | 2.30 | 3.95 | 5.5 | 12.5 | 14.0 | 1280 | 3800 | 4800 | 17.3 | 16.5 | 15.8 |
| | 20+20+20+35+50+50 | 1.28 | 1.28 | 1.28 | 2.24 | 3.21 | 3.21 | 5.5 | 12.5 | 14.0 | 1280 | 3800 | 4800 | 17.3 | 16.5 | 15.8 |
| | 20+20+25+25+25+25 | 1.79 | 1.79 | 2.23 | 2.23 | 2.23 | 2.23 | 5.5 | 12.5 | 14.0 | 1280 | 3880 | 4800 | 17.7 | 16.9 | 16.2 |
| | 20+20+25+25+25+35 | 1.67 | 1.67 | 2.08 | 2.08 | 2.08 | 2.92 | 5.5 | 12.5 | 14.0 | 1280 | 3860 | 4800 | 17.6 | 16.8 | 16.1 |
| | 20+20+25+25+25+50 | 1.52 | 1.52 | 1.89 | 1.89 | 1.89 | 3.79 | 5.5 | 12.5 | 14.0 | 1280 | 3850 | 4800 | 17.5 | 16.8 | 16.1 |
| | 20+20+25+25+25+60 | 1.43 | 1.43 | 1.79 | 1.79 | 1.79 | 4.29 | 5.5 | 12.5 | 14.0 | 1280 | 3830 | 4800 | 17.4 | 16.7 | 16.0 |
| | 20+20+25+25+35+35 | 1.56 | 1.56 | 1.95 | 1.95 | 2.73 | 2.73 | 5.5 | 12.5 | 14.0 | 1280 | 3860 | 4800 | 17.6 | 16.8 | 16.1 |
| | 20+20+25+25+35+50 | 1.43 | 1.43 | 1.79 | 1.79 | 2.50 | 3.57 | 5.5 | 12.5 | 14.0 | 1280 | 3830 | 4800 | 17.4 | 16.7 | 16.0 |
| | 20+20+25+25+35+60 | 1.35 | 1.35 | 1.69 | 1.69 | 2.36 | 4.05 | 5.5 | 12.5 | 14.0 | 1280 | 3810 | 4800 | 17.3 | 16.6 | 15.9 |
| | 20+20+25+25+50+50 | 1.32 | 1.32 | 1.64 | 1.64 | 3.29 | 3.29 | 5.5 | 12.5 | 14.0 | 1280 | 3800 | 4800 | 17.3 | 16.5 | 15.8 |
| | 20+20+25+35+35+35 | 1.47 | 1.47 | 1.84 | 2.57 | 2.57 | 2.57 | 5.5 | 12.5 | 14.0 | 1280 | 3840 | 4800 | 17.5 | 16.7 | 16.0 |
| | 20+20+25+35+35+50 | 1.35 | 1.35 | 1.69 | 2.36 | 2.36 | 3.38 | 5.5 | 12.5 | 14.0 | 1280 | 3810 | 4800 | 17.3 | 16.6 | 15.9 |
| | 20+20+25+35+35+60 | 1.28 | 1.28 | 1.60 | 2.24 | 2.24 | 3.85 | 5.5 | 12.5 | 14.0 | 1280 | 3800 | 4800 | 17.3 | 16.5 | 15.8 |
| | 20+20+35+35+35+35 | 1.39 | 1.39 | 2.43 | 2.43 | 2.43 | 2.43 | 5.5 | 12.5 | 14.0 | 1280 | 3820 | 4800 | 17.4 | 16.6 | 15.9 |
| | 20+20+35+35+35+50 | 1.28 | 1.28 | 2.24 | 2.24 | 2.24 | 3.21 | 5.5 | 12.5 | 14.0 | 1280 | 3800 | 4800 | 17.3 | 16.5 | 15.8 |
| | 20+25+25+25+25+25 | 1.72 | 2.16 | 2.16 | 2.16 | 2.16 | 2.16 | 5.5 | 12.5 | 14.0 | 1280 | 3870 | 4800 | 17.6 | 16.8 | 16.1 |
| | 20+25+25+25+25+35 | 1.61 | 2.02 | 2.02 | 2.02 | 2.02 | 2.82 | 5.5 | 12.5 | 14.0 | 1280 | 3860 | 4800 | 17.6 | 16.8 | 16.1 |
| | 20+25+25+25+25+50 | 1.47 | 1.84 | 1.84 | 1.84 | 1.84 | 3.68 | 5.5 | 12.5 | 14.0 | 1280 | 3840 | 4800 | 17.5 | 16.7 | 16.0 |
| | 20+25+25+25+25+60 | 1.39 | 1.74 | 1.74 | 1.74 | 1.74 | 4.17 | 5.5 | 12.5 | 14.0 | 1280 | 3820 | 4800 | 17.4 | 16.6 | 15.9 |
| | 20+25+25+25+35+35 | 1.52 | 1.89 | 1.89 | 1.89 | 2.65 | 2.65 | 5.5 | 12.5 | 14.0 | 1280 | 3850 | 4800 | 17.5 | 16.8 | 16.1 |
| | 20+25+25+25+35+50 | 1.39 | 1.74 | 1.74 | 1.74 | 2.43 | 3.47 | 5.5 | 12.5 | 14.0 | 1280 | 3820 | 4800 | 17.4 | 16.6 | 15.9 |
| | 20+25+25+25+35+60 | 1.32 | 1.64 | 1.64 | 1.64 | 2.30 | 3.95 | 5.5 | 12.5 | 14.0 | 1280 | 3800 | 4800 | 17.3 | 16.5 | 15.8 |
| | 20+25+25+25+50+50 | 1.28 | 1.60 | 1.60 | 1.60 | 3.21 | 3.21 | 5.5 | 12.5 | 14.0 | 1280 | 3800 | 4800 | 17.3 | 16.5 | 15.8 |
| | 20+25+25+35+35+35 | 1.43 | 1.79 | 1.79 | 2.50 | 2.50 | 2.50 | 5.5 | 12.5 | 14.0 | 1280 | 3830 | 4800 | 17.4 | 16.7 | 16.0 |
| | 20+25+25+35+35+50 | 1.32 | 1.64 | 1.64 | 2.30 | 2.30 | 3.29 | 5.5 | 12.5 | 14.0 | 1280 | 3800 | 4800 | 17.3 | 16.5 | 15.8 |
| | 20+25+35+35+35+35 | 1.35 | 1.69 | 2.36 | 2.36 | 2.36 | 2.36 | 5.5 | 12.5 | 14.0 | 1280 | 3810 | 4800 | 17.3 | 16.6 | 15.9 |
| | 20+35+35+35+35+35 | 1.28 | 2.24 | 2.24 | 2.24 | 2.24 | 2.24 | 5.5 | 12.5 | 14.0 | 1280 | 3800 | 4800 | 17.3 | 16.5 | 15.8 |
| | 25+25+25+25+25+25 | 2.08 | 2.08 | 2.08 | 2.08 | 2.08 | 2.08 | 5.5 | 12.5 | 14.0 | 1280 | 3860 | 4800 | 17.6 | 16.8 | 16.1 |

| Indoor unit combination | | | Cooling capacity (kW) | | | | | | | | | Power consumption(W) | | | Standard current(A) | | |
|---|---|---|---|---|---|---|---|---|---|---|---|---|---|---|---|---|---|
| | | | Room cooling capacity | | | | | | Total capacity | | | Min. | Standard | Max. | 220V | 230V | 240V |
| | | | A | B | C | D | E | F | Min. | Standard | Max. | | | | | | |
| Cooling operation | 6 room | 25+25+25+25+25+35 | 1.95 | 1.95 | 1.95 | 1.95 | 1.95 | 2.73 | 5.5 | 12.5 | 14.0 | 1280 | 3860 | 4800 | 17.6 | 16.8 | 16.1 |
| | | 25+25+25+25+25+50 | 1.79 | 1.79 | 1.79 | 1.79 | 1.79 | 3.57 | 5.5 | 12.5 | 14.0 | 1280 | 3830 | 4800 | 17.4 | 16.7 | 16.0 |
| | | 25+25+25+25+25+60 | 1.69 | 1.69 | 1.69 | 1.69 | 1.69 | 4.05 | 5.5 | 12.5 | 14.0 | 1280 | 3810 | 4800 | 17.3 | 16.6 | 15.9 |
| | | 25+25+25+25+35+35 | 1.84 | 1.84 | 1.84 | 1.84 | 2.57 | 2.57 | 5.5 | 12.5 | 14.0 | 1280 | 3840 | 4800 | 17.5 | 16.7 | 16.0 |
| | | 25+25+25+25+35+50 | 1.69 | 1.69 | 1.69 | 1.69 | 2.36 | 3.38 | 5.5 | 12.5 | 14.0 | 1280 | 3810 | 4800 | 17.3 | 16.6 | 15.9 |
| | | 25+25+25+25+35+60 | 1.60 | 1.60 | 1.60 | 1.60 | 2.24 | 3.85 | 5.5 | 12.5 | 14.0 | 1280 | 3800 | 4800 | 17.3 | 16.5 | 15.8 |
| | | 25+25+25+35+35+35 | 1.74 | 1.74 | 1.74 | 2.43 | 2.43 | 2.43 | 5.5 | 12.5 | 14.0 | 1280 | 3820 | 4800 | 17.4 | 16.6 | 15.9 |
| | | 25+25+25+35+35+50 | 1.60 | 1.60 | 1.60 | 2.24 | 2.24 | 3.21 | 5.5 | 12.5 | 14.0 | 1280 | 3800 | 4800 | 17.3 | 16.5 | 15.8 |
| | | 25+25+35+35+35+35 | 1.64 | 1.64 | 2.30 | 2.30 | 2.30 | 2.30 | 5.5 | 12.5 | 14.0 | 1280 | 3800 | 4800 | 17.3 | 16.5 | 15.8 |

## SCM125ZM-S Table of Indoor unit combination with other indoor unit

| Indoor unit combination | | | Heating capacity (kW) | | | | | | | | | Power consumption(W) | | | Standard current(A) | | |
|---|---|---|---|---|---|---|---|---|---|---|---|---|---|---|---|---|---|
| | | | Room heating capacity | | | | | | Total capacity | | | Min. | Standard | Max. | 220V | 230V | 240V |
| | | | A | B | C | D | E | F | Min. | Standard | Max. | | | | | | |
| Heating operation | 1 room | 20 | 3.0 | - | - | - | - | - | 1.5 | 3.0 | 3.6 | 700 | 1220 | 1330 | 5.6 | 5.4 | 5.1 |
| | | 25 | 3.4 | - | - | - | - | - | 1.5 | 3.4 | 4.1 | 700 | 1265 | 1540 | 5.8 | 5.6 | 5.3 |
| | | 35 | 4.5 | - | - | - | - | - | 1.5 | 4.5 | 4.9 | 700 | 1650 | 1840 | 7.6 | 7.2 | 6.9 |
| | | 50 | 5.8 | - | - | - | - | - | 1.5 | 5.8 | 6.4 | 700 | 2120 | 2410 | 9.7 | 9.3 | 8.9 |
| | | 60 | 6.8 | - | - | - | - | - | 1.5 | 6.8 | 7.4 | 700 | 2500 | 2760 | 11.5 | 11.0 | 10.5 |
| | | 71 | 8.0 | - | - | - | - | - | 1.5 | 8.0 | 8.1 | 700 | 3020 | 3090 | 13.9 | 13.3 | 12.7 |
| | 2 room | 20+20 | 3.00 | 3.00 | - | - | - | - | 2.1 | 6.0 | 7.2 | 750 | 1540 | 1860 | 7.1 | 6.8 | 6.5 |
| | | 20+25 | 2.84 | 3.56 | - | - | - | - | 2.1 | 6.4 | 7.7 | 750 | 1660 | 2210 | 7.6 | 7.3 | 7.0 |
| | | 20+35 | 2.73 | 4.77 | - | - | - | - | 2.1 | 7.5 | 8.5 | 750 | 1990 | 2520 | 9.1 | 8.7 | 8.4 |
| | | 20+50 | 2.51 | 6.29 | - | - | - | - | 2.1 | 8.8 | 10.0 | 750 | 2430 | 3220 | 11.2 | 10.7 | 10.2 |
| | | 20+60 | 2.45 | 7.35 | - | - | - | - | 2.1 | 9.8 | 11.0 | 750 | 2840 | 3620 | 13.0 | 12.5 | 12.0 |
| | | 20+71 | 2.42 | 8.58 | - | - | - | - | 2.1 | 11.0 | 11.6 | 750 | 2840 | 3620 | 13.0 | 12.5 | 12.0 |
| | | 25+25 | 3.40 | 3.40 | - | - | - | - | 2.1 | 6.8 | 8.2 | 750 | 1770 | 2420 | 8.1 | 7.8 | 7.4 |
| | | 25+35 | 3.29 | 4.61 | - | - | - | - | 2.1 | 7.9 | 9.0 | 750 | 2140 | 2820 | 9.8 | 9.4 | 9.0 |
| | | 25+50 | 3.07 | 6.13 | - | - | - | - | 2.1 | 9.2 | 10.5 | 750 | 2630 | 3610 | 12.1 | 11.6 | 11.1 |
| | | 25+60 | 3.00 | 7.20 | - | - | - | - | 2.1 | 10.2 | 11.5 | 750 | 3040 | 3790 | 14.0 | 13.4 | 12.8 |
| | | 25+71 | 2.97 | 8.43 | - | - | - | - | 2.1 | 11.4 | 12.1 | 750 | 3440 | 4250 | 15.8 | 15.1 | 14.5 |
| | | 35+35 | 4.50 | 4.50 | - | - | - | - | 2.1 | 9.0 | 9.8 | 750 | 2520 | 3210 | 11.6 | 11.1 | 10.6 |
| | | 35+50 | 4.24 | 6.06 | - | - | - | - | 2.1 | 10.3 | 11.3 | 750 | 3040 | 3710 | 14.0 | 13.4 | 12.8 |
| | | 35+60 | 4.16 | 7.14 | - | - | - | - | 2.1 | 11.3 | 12.3 | 750 | 3420 | 4320 | 15.7 | 15.0 | 14.4 |
| | | 35+71 | 4.13 | 8.37 | - | - | - | - | 2.1 | 12.5 | 12.9 | 750 | 4030 | 4690 | 18.5 | 17.7 | 17.0 |
| | | 50+50 | 5.80 | 5.80 | - | - | - | - | 2.1 | 11.6 | 12.8 | 750 | 3660 | 4620 | 16.8 | 16.1 | 15.4 |
| | | 50+60 | 5.73 | 6.87 | - | - | - | - | 2.1 | 12.6 | 13.8 | 750 | 4090 | 5230 | 18.8 | 18.0 | 17.2 |
| | | 50+71 | 5.58 | 7.92 | | | | | 2.1 | 13.5 | 13.8 | 750 | 4540 | 5230 | 20.8 | 19.9 | 19.1 |
| | | 60+60 | 6.75 | 6.75 | - | - | - | - | 2.1 | 13.5 | 13.8 | 750 | 4540 | 5230 | 20.8 | 19.9 | 19.1 |
| | | 60+71 | 6.18 | 7.32 | - | - | - | - | 2.1 | 13.5 | 13.8 | 750 | 4540 | 5230 | 20.8 | 19.9 | 19.1 |
| | | 71+71 | 6.75 | 6.75 | - | - | - | - | 2.1 | 13.5 | 13.8 | 750 | 4530 | 5230 | 20.8 | 19.9 | 19.1 |
| | 3 room | 20+20+20 | 3.00 | 3.00 | 3.00 | - | - | - | 3.2 | 9.0 | 10.9 | 780 | 2270 | 3350 | 10.4 | 10.0 | 9.6 |
| | | 20+20+25 | 2.89 | 2.89 | 3.62 | - | - | - | 3.2 | 9.4 | 11.4 | 780 | 2400 | 3550 | 11.0 | 10.5 | 10.1 |
| | | 20+20+35 | 2.80 | 2.80 | 4.90 | - | - | - | 3.2 | 10.5 | 12.2 | 780 | 2760 | 3820 | 12.7 | 12.1 | 11.6 |
| | | 20+20+50 | 2.62 | 2.62 | 6.56 | - | - | - | 3.2 | 11.8 | 13.7 | 780 | 3270 | 4290 | 15.0 | 14.4 | 13.8 |
| | | 20+20+60 | 2.56 | 2.56 | 7.68 | - | - | - | 3.2 | 12.8 | 13.8 | 780 | 3690 | 4350 | 16.9 | 16.2 | 15.5 |
| | | 20+20+71 | 2.43 | 2.43 | 8.64 | - | - | - | 3.2 | 13.5 | 13.8 | 780 | 4140 | 4350 | 19.0 | 18.2 | 17.4 |
| | | 20+25+25 | 2.80 | 3.50 | 3.50 | - | - | - | 3.2 | 9.8 | 11.9 | 780 | 2560 | 3720 | 11.8 | 11.2 | 10.8 |
| | | 20+25+35 | 2.73 | 3.41 | 4.77 | - | - | - | 3.2 | 10.9 | 12.7 | 780 | 2970 | 3990 | 13.6 | 13.0 | 12.5 |
| | | 20+25+50 | 2.57 | 3.21 | 6.42 | - | - | - | 3.2 | 12.2 | 13.8 | 780 | 3480 | 4350 | 16.0 | 15.3 | 14.6 |
| | | 20+25+60 | 2.51 | 3.14 | 7.54 | - | - | - | 3.2 | 13.2 | 13.8 | 780 | 3990 | 4350 | 18.3 | 17.5 | 16.8 |
| | | 20+25+71 | 2.33 | 2.91 | 8.26 | - | - | - | 3.2 | 13.5 | 13.8 | 780 | 4140 | 4350 | 19.0 | 18.2 | 17.4 |
| | | 20+35+35 | 2.67 | 4.67 | 4.67 | - | - | - | 3.2 | 12.0 | 13.5 | 780 | 3460 | 4220 | 15.9 | 15.2 | 14.6 |
| | | 20+35+50 | 2.53 | 4.43 | 6.33 | - | - | - | 3.2 | 13.3 | 13.8 | 780 | 3980 | 4350 | 18.3 | 17.5 | 16.8 |
| | | 20+35+60 | 2.35 | 4.11 | 7.04 | - | - | - | 3.2 | 13.5 | 13.8 | 780 | 4130 | 4350 | 19.0 | 18.1 | 17.4 |
| | | 20+35+71 | 2.14 | 3.75 | 7.61 | - | - | - | 3.2 | 13.5 | 13.8 | 780 | 4130 | 4350 | 19.0 | 18.1 | 17.4 |
| | | 20+50+50 | 2.25 | 5.63 | 5.63 | - | - | - | 3.2 | 13.5 | 13.8 | 780 | 4130 | 4350 | 19.0 | 18.1 | 17.4 |
| | | 20+50+60 | 2.08 | 5.19 | 6.23 | - | - | - | 3.2 | 13.5 | 13.8 | 780 | 4130 | 4350 | 19.0 | 18.1 | 17.4 |
| | | 20+50+71 | 1.91 | 4.79 | 6.80 | - | - | - | 4.2 | 13.5 | 13.8 | 780 | 4130 | 4350 | 18.8 | 18.0 | 17.2 |
| | | 20+60+60 | 1.93 | 5.79 | 5.79 | - | - | - | 5.2 | 13.5 | 13.8 | 780 | 4130 | 4350 | 18.6 | 17.8 | 17.0 |
| | | 20+60+71 | 1.79 | 5.36 | 6.35 | - | - | - | 6.2 | 13.5 | 13.8 | 780 | 4120 | 4350 | 18.4 | 17.6 | 16.8 |
| | | 20+71+71 | 1.67 | 5.92 | 5.92 | - | - | - | 7.2 | 13.5 | 13.8 | 780 | 4120 | 4350 | 18.2 | 17.4 | 16.7 |
| | | 25+25+25 | 3.40 | 3.40 | 3.40 | - | - | - | 3.2 | 10.2 | 12.4 | 780 | 2760 | 3880 | 12.7 | 12.1 | 11.6 |
| | | 25+25+35 | 3.32 | 3.32 | 4.65 | - | - | - | 3.2 | 11.3 | 13.2 | 780 | 3170 | 4120 | 14.6 | 13.9 | 13.3 |
| | | 25+25+50 | 3.15 | 3.15 | 6.30 | - | - | - | 3.2 | 12.6 | 13.8 | 780 | 3690 | 4350 | 16.9 | 16.2 | 15.5 |
| | | 25+25+60 | 3.07 | 3.07 | 7.36 | - | - | - | 3.2 | 13.5 | 13.8 | 780 | 4130 | 4350 | 19.0 | 18.1 | 17.4 |
| | | 25+25+71 | 2.79 | 2.79 | 7.92 | - | - | - | 3.2 | 13.5 | 13.8 | 780 | 4130 | 4350 | 19.0 | 18.1 | 17.4 |
| | | 25+35+35 | 3.26 | 4.57 | 4.57 | - | - | - | 3.2 | 12.4 | 13.8 | 780 | 3780 | 4350 | 17.4 | 16.6 | 15.9 |
| | | 25+35+50 | 3.07 | 4.30 | 6.14 | - | - | - | 3.2 | 13.5 | 13.8 | 780 | 4140 | 4350 | 19.0 | 18.2 | 17.4 |
| | | 25+35+60 | 2.81 | 3.94 | 6.75 | - | - | - | 3.2 | 13.5 | 13.8 | 780 | 4140 | 4350 | 19.0 | 18.2 | 17.4 |
| | | 25+35+71 | 2.58 | 3.61 | 7.32 | - | - | - | 4.2 | 13.5 | 13.8 | 780 | 4130 | 4350 | 18.8 | 18.0 | 17.2 |
| | | 25+50+50 | 2.70 | 5.40 | 5.40 | - | - | - | 3.2 | 13.5 | 13.8 | 780 | 4130 | 4350 | 19.0 | 18.1 | 17.4 |
| | | 25+50+60 | 2.50 | 5.00 | 6.00 | - | - | - | 3.2 | 13.5 | 13.8 | 780 | 4130 | 4350 | 19.0 | 18.1 | 17.4 |
| | | 25+50+71 | 2.31 | 4.62 | 6.57 | - | - | - | 3.2 | 13.5 | 13.8 | 780 | 4130 | 4350 | 19.0 | 18.1 | 17.4 |
| | | 25+60+60 | 2.33 | 5.59 | 5.59 | - | - | - | 3.2 | 13.5 | 13.8 | 780 | 4130 | 4350 | 19.0 | 18.1 | 17.4 |

R410A

# MULTI-SPLIT SYSTEM

| Indoor unit combination | | | Heating capacity (kW) | | | | | | | | | Power consumption(W) | | | Standard current(A) | | |
|---|---|---|---|---|---|---|---|---|---|---|---|---|---|---|---|---|---|
| | | | Room heating capacity | | | | | | Total capacity | | | | | | | | |
| | | | A | B | C | D | E | F | Min. | Standard | Max. | Min. | Standard | Max. | 220V | 230V | 240V |
| Heating operation | 3 room | 25+60+71 | 2.16 | 5.19 | 6.14 | - | - | - | 3.2 | 13.5 | 13.8 | 780 | 4120 | 4350 | 18.9 | 18.1 | 17.3 |
| | | 25+71+71 | 2.02 | 5.74 | 5.74 | - | - | - | 3.2 | 13.5 | 13.8 | 780 | 4120 | 4350 | 18.9 | 18.1 | 17.3 |
| | | 35+35+35 | 4.50 | 4.50 | 4.50 | - | - | - | 3.2 | 13.5 | 13.8 | 780 | 4140 | 4350 | 19.0 | 18.2 | 17.4 |
| | | 35+35+50 | 3.94 | 3.94 | 5.63 | - | - | - | 3.2 | 13.5 | 13.8 | 780 | 4140 | 4350 | 19.0 | 18.2 | 17.4 |
| | | 35+35+60 | 3.63 | 3.63 | 6.23 | - | - | - | 3.2 | 13.5 | 13.8 | 780 | 4130 | 4350 | 19.0 | 18.1 | 17.4 |
| | | 35+35+71 | 3.35 | 3.35 | 6.80 | - | - | - | 3.2 | 13.5 | 13.8 | 780 | 4130 | 4350 | 19.0 | 18.1 | 17.4 |
| | | 35+50+50 | 3.50 | 5.00 | 5.00 | - | - | - | 3.2 | 13.5 | 13.8 | 780 | 4130 | 4350 | 19.0 | 18.1 | 17.4 |
| | | 35+50+60 | 3.26 | 4.66 | 5.59 | - | - | - | 3.2 | 13.5 | 13.8 | 780 | 4130 | 4350 | 19.0 | 18.1 | 17.4 |
| | | 35+50+71 | 3.03 | 4.33 | 6.14 | - | - | - | 3.2 | 13.5 | 13.8 | 780 | 4120 | 4350 | 18.9 | 18.1 | 17.3 |
| | | 35+60+60 | 3.05 | 5.23 | 5.23 | - | - | - | 3.2 | 13.5 | 13.8 | 780 | 4120 | 4350 | 18.9 | 18.1 | 17.3 |
| | | 35+60+71 | 2.85 | 4.88 | 5.77 | - | - | - | 3.2 | 13.5 | 13.8 | 780 | 4120 | 4350 | 18.9 | 18.1 | 17.3 |
| | | 35+71+71 | 2.67 | 5.42 | 5.42 | - | - | - | 3.2 | 13.5 | 13.8 | 780 | 4120 | 4350 | 18.9 | 18.1 | 17.3 |
| | | 50+50+50 | 4.50 | 4.50 | 4.50 | - | - | - | 3.2 | 13.5 | 13.8 | 780 | 4120 | 4350 | 18.9 | 18.1 | 17.3 |
| | | 50+50+60 | 4.22 | 4.22 | 5.06 | - | - | - | 3.2 | 13.5 | 13.8 | 780 | 4120 | 4350 | 18.9 | 18.1 | 17.3 |
| | | 50+50+71 | 3.95 | 3.95 | 5.61 | - | - | - | 3.2 | 13.5 | 13.8 | 780 | 4120 | 4350 | 18.9 | 18.1 | 17.3 |
| | | 50+60+60 | 3.97 | 4.76 | 4.76 | - | - | - | 3.2 | 13.5 | 13.8 | 780 | 4120 | 4350 | 18.9 | 18.1 | 17.3 |
| | | 50+60+71 | 3.73 | 4.48 | 5.30 | - | - | - | 3.2 | 13.5 | 13.8 | 780 | 4110 | 4350 | 18.9 | 18.1 | 17.3 |
| | | 60+60+60 | 4.50 | 4.50 | 4.50 | - | - | - | 3.2 | 13.5 | 13.8 | 780 | 4110 | 4350 | 18.9 | 18.1 | 17.3 |
| | | 60+60+71 | 4.24 | 4.24 | 5.02 | - | - | - | 3.2 | 13.5 | 13.8 | 780 | 4110 | 4350 | 18.9 | 18.1 | 17.3 |
| | 4 room | 20+20+20+20 | 3.00 | 3.00 | 3.00 | 3.00 | - | - | 3.6 | 12.0 | 13.8 | 950 | 3270 | 3920 | 14.9 | 14.2 | 13.6 |
| | | 20+20+20+25 | 2.92 | 2.92 | 2.92 | 3.65 | - | - | 3.6 | 12.4 | 13.8 | 950 | 3460 | 3920 | 15.7 | 15.1 | 14.4 |
| | | 20+20+20+35 | 2.84 | 2.84 | 2.84 | 4.97 | - | - | 3.6 | 13.5 | 13.8 | 950 | 3770 | 3920 | 17.2 | 16.4 | 15.7 |
| | | 20+20+20+50 | 2.45 | 2.45 | 2.45 | 6.14 | - | - | 3.6 | 13.5 | 13.8 | 950 | 3760 | 3920 | 17.1 | 16.4 | 15.7 |
| | | 20+20+20+60 | 2.25 | 2.25 | 2.25 | 6.75 | - | - | 3.6 | 13.5 | 13.8 | 950 | 3760 | 3920 | 17.1 | 16.4 | 15.7 |
| | | 20+20+20+71 | 2.06 | 2.06 | 2.06 | 7.32 | - | - | 3.6 | 13.5 | 13.8 | 950 | 3750 | 3920 | 16.9 | 16.2 | 15.5 |
| | | 20+20+25+25 | 2.84 | 2.84 | 3.56 | 3.56 | - | - | 3.6 | 12.8 | 13.8 | 950 | 3510 | 3920 | 16.0 | 15.3 | 14.6 |
| | | 20+20+25+35 | 2.70 | 2.70 | 3.38 | 4.73 | - | - | 3.6 | 13.5 | 13.8 | 950 | 3770 | 3920 | 17.2 | 16.4 | 15.7 |
| | | 20+20+25+50 | 2.35 | 2.35 | 2.93 | 5.87 | - | - | 3.6 | 13.5 | 13.8 | 950 | 3760 | 3920 | 17.1 | 16.4 | 15.7 |
| | | 20+20+25+60 | 2.16 | 2.16 | 2.70 | 6.48 | - | - | 3.6 | 13.5 | 13.8 | 950 | 3750 | 3920 | 17.1 | 16.3 | 15.6 |
| | | 20+20+25+71 | 1.99 | 1.99 | 2.48 | 7.05 | - | - | 3.6 | 13.5 | 13.8 | 950 | 3750 | 3920 | 17.1 | 16.3 | 15.6 |
| | | 20+20+35+35 | 2.45 | 2.45 | 4.30 | 4.30 | - | - | 3.6 | 13.5 | 13.8 | 950 | 3760 | 3920 | 17.1 | 16.4 | 15.7 |
| | | 20+20+35+50 | 2.16 | 2.16 | 3.78 | 5.40 | - | - | 3.6 | 13.5 | 13.8 | 950 | 3750 | 3920 | 17.1 | 16.3 | 15.6 |
| | | 20+20+35+60 | 2.00 | 2.00 | 3.50 | 6.00 | - | - | 3.6 | 13.5 | 13.8 | 950 | 3750 | 3920 | 17.1 | 16.3 | 15.6 |
| | | 20+20+35+71 | 1.85 | 1.85 | 3.24 | 6.57 | - | - | 3.6 | 13.5 | 13.8 | 950 | 3740 | 3920 | 17.0 | 16.3 | 15.6 |
| | | 20+20+50+50 | 1.93 | 1.93 | 4.82 | 4.82 | - | - | 3.6 | 13.5 | 13.8 | 950 | 3740 | 3920 | 17.0 | 16.3 | 15.6 |
| | | 20+20+50+60 | 1.80 | 1.80 | 4.50 | 5.40 | - | - | 3.6 | 13.5 | 13.8 | 950 | 3740 | 3920 | 17.0 | 16.3 | 15.6 |
| | | 20+20+50+71 | 1.68 | 1.68 | 4.19 | 5.95 | - | - | 3.6 | 13.5 | 13.8 | 950 | 3740 | 3920 | 17.0 | 16.3 | 15.6 |
| | | 20+20+60+60 | 1.69 | 1.69 | 5.06 | 5.06 | - | - | 3.6 | 13.5 | 13.8 | 950 | 3740 | 3920 | 17.0 | 16.3 | 15.6 |
| | | 20+20+60+71 | 1.58 | 1.58 | 4.74 | 5.61 | - | - | 3.6 | 13.5 | 13.8 | 950 | 3730 | 3920 | 17.0 | 16.2 | 15.6 |
| | | 20+20+71+71 | 1.48 | 1.48 | 5.27 | 5.27 | - | - | 3.6 | 13.5 | 13.8 | 950 | 3730 | 3920 | 17.0 | 16.2 | 15.6 |
| | | 20+25+25+25 | 2.78 | 3.47 | 3.47 | 3.47 | - | - | 3.6 | 13.2 | 13.8 | 950 | 3620 | 3920 | 16.5 | 15.8 | 15.1 |
| | | 20+25+25+35 | 2.57 | 3.21 | 3.21 | 4.50 | - | - | 3.6 | 13.5 | 13.8 | 950 | 3770 | 3920 | 17.2 | 16.4 | 15.7 |
| | | 20+25+25+50 | 2.25 | 2.81 | 2.81 | 5.63 | - | - | 3.6 | 13.5 | 13.8 | 950 | 3760 | 3920 | 17.1 | 16.4 | 15.7 |
| | | 20+25+25+60 | 2.08 | 2.60 | 2.60 | 6.23 | - | - | 3.6 | 13.5 | 13.8 | 950 | 3750 | 3920 | 17.1 | 16.3 | 15.6 |
| | | 20+25+25+71 | 1.91 | 2.39 | 2.39 | 6.80 | - | - | 3.6 | 13.5 | 13.8 | 950 | 3740 | 3920 | 17.0 | 16.3 | 15.6 |
| | | 20+25+35+35 | 2.35 | 2.93 | 4.11 | 4.11 | - | - | 3.6 | 13.5 | 13.8 | 950 | 3760 | 3920 | 17.1 | 16.4 | 15.7 |
| | | 20+25+35+50 | 2.08 | 2.60 | 3.63 | 5.19 | - | - | 3.6 | 13.5 | 13.8 | 950 | 3750 | 3920 | 17.1 | 16.3 | 15.6 |
| | | 20+25+35+60 | 1.93 | 2.41 | 3.38 | 5.79 | - | - | 3.6 | 13.5 | 13.8 | 950 | 3740 | 3920 | 17.0 | 16.3 | 15.6 |
| | | 20+25+35+71 | 1.79 | 2.24 | 3.13 | 6.35 | - | - | 3.6 | 13.5 | 13.8 | 950 | 3740 | 3920 | 17.0 | 16.3 | 15.6 |
| | | 20+25+50+50 | 1.86 | 2.33 | 4.66 | 4.66 | - | - | 3.6 | 13.5 | 13.8 | 950 | 3740 | 3920 | 17.0 | 16.3 | 15.6 |
| | | 20+25+50+60 | 1.74 | 2.18 | 4.35 | 5.23 | - | - | 3.6 | 13.5 | 13.8 | 950 | 3740 | 3920 | 17.0 | 16.3 | 15.6 |
| | | 20+25+50+71 | 1.63 | 2.03 | 4.07 | 5.77 | - | - | 3.6 | 13.5 | 13.8 | 950 | 3730 | 3920 | 17.0 | 16.2 | 15.6 |
| | | 20+25+60+60 | 1.64 | 2.05 | 4.91 | 4.91 | - | - | 3.6 | 13.5 | 13.8 | 950 | 3730 | 3920 | 17.0 | 16.2 | 15.6 |
| | | 20+25+60+71 | 1.53 | 1.92 | 4.60 | 5.45 | - | - | 3.6 | 13.5 | 13.8 | 950 | 3730 | 3920 | 17.0 | 16.2 | 15.6 |
| | | 20+25+71+71 | 1.44 | 1.80 | 5.13 | 5.13 | - | - | 3.6 | 13.5 | 13.8 | 950 | 3720 | 3920 | 16.9 | 16.2 | 15.5 |
| | | 20+35+35+35 | 2.16 | 3.78 | 3.78 | 3.78 | - | - | 3.6 | 13.5 | 13.8 | 950 | 3750 | 3920 | 17.1 | 16.3 | 15.6 |
| | | 20+35+35+50 | 1.93 | 3.38 | 3.38 | 4.82 | - | - | 3.6 | 13.5 | 13.8 | 950 | 3740 | 3920 | 17.0 | 16.3 | 15.6 |
| | | 20+35+35+60 | 1.80 | 3.15 | 3.15 | 5.40 | - | - | 3.6 | 13.5 | 13.8 | 950 | 3740 | 3920 | 17.0 | 16.3 | 15.6 |
| | | 20+35+35+71 | 1.68 | 2.93 | 2.93 | 5.95 | - | - | 3.6 | 13.5 | 13.8 | 950 | 3740 | 3920 | 17.0 | 16.3 | 15.6 |
| | | 20+35+50+50 | 1.74 | 3.05 | 4.35 | 4.35 | - | - | 3.6 | 13.5 | 13.8 | 950 | 3740 | 3920 | 17.0 | 16.3 | 15.6 |
| | | 20+35+50+60 | 1.64 | 2.86 | 4.09 | 4.91 | - | - | 3.6 | 13.5 | 13.8 | 950 | 3730 | 3920 | 17.0 | 16.2 | 15.6 |
| | | 20+35+50+71 | 1.53 | 2.68 | 3.84 | 5.45 | - | - | 3.6 | 13.5 | 13.8 | 950 | 3730 | 3920 | 17.0 | 16.2 | 15.6 |
| | | 20+35+60+60 | 1.54 | 2.70 | 4.63 | 4.63 | - | - | 3.6 | 13.5 | 13.8 | 950 | 3730 | 3920 | 17.0 | 16.2 | 15.6 |
| | | 20+35+60+71 | 1.45 | 2.54 | 4.35 | 5.15 | - | - | 3.6 | 13.5 | 13.8 | 950 | 3720 | 3920 | 16.9 | 16.2 | 15.5 |
| | | 20+50+50+50 | 1.59 | 3.97 | 3.97 | 3.97 | - | - | 3.6 | 13.5 | 13.8 | 950 | 3730 | 3920 | 17.0 | 16.2 | 15.6 |
| | | 20+50+50+60 | 1.50 | 3.75 | 3.75 | 4.50 | - | - | 3.6 | 13.5 | 13.8 | 950 | 3730 | 3920 | 17.0 | 16.2 | 15.6 |
| | | 20+50+50+71 | 1.41 | 3.53 | 3.53 | 5.02 | - | - | 3.6 | 13.5 | 13.8 | 950 | 3720 | 3920 | 16.9 | 16.2 | 15.5 |
| | | 20+50+60+60 | 1.42 | 3.55 | 4.26 | 4.26 | - | - | 3.6 | 13.5 | 13.8 | 950 | 3720 | 3920 | 16.9 | 16.2 | 15.5 |
| | | 25+25+25+25 | 3.38 | 3.38 | 3.38 | 3.38 | - | - | 3.6 | 13.5 | 13.8 | 950 | 3770 | 3920 | 17.2 | 16.4 | 15.7 |
| | | 25+25+25+35 | 3.07 | 3.07 | 3.07 | 4.30 | - | - | 3.6 | 13.5 | 13.8 | 950 | 3760 | 3920 | 17.1 | 16.4 | 15.7 |
| | | 25+25+25+50 | 2.70 | 2.70 | 2.70 | 5.40 | - | - | 3.6 | 13.5 | 13.8 | 950 | 3750 | 3920 | 17.1 | 16.3 | 15.6 |
| | | 25+25+25+60 | 2.50 | 2.50 | 2.50 | 6.00 | - | - | 3.6 | 13.5 | 13.8 | 950 | 3750 | 3920 | 17.1 | 16.3 | 15.6 |
| | | 25+25+25+71 | 2.31 | 2.31 | 2.31 | 6.57 | - | - | 3.6 | 13.5 | 13.8 | 950 | 3740 | 3920 | 17.0 | 16.3 | 15.6 |
| | | 25+25+35+35 | 2.81 | 2.81 | 3.94 | 3.94 | - | - | 3.6 | 13.5 | 13.8 | 950 | 3760 | 3920 | 17.1 | 16.4 | 15.7 |
| | | 25+25+35+50 | 2.50 | 2.50 | 3.50 | 5.00 | - | - | 3.6 | 13.5 | 13.8 | 950 | 3750 | 3920 | 17.1 | 16.3 | 15.6 |
| | | 25+25+35+60 | 2.33 | 2.33 | 3.26 | 5.59 | - | - | 3.6 | 13.5 | 13.8 | 950 | 3740 | 3920 | 17.0 | 16.3 | 15.6 |
| | | 25+25+35+71 | 2.16 | 2.16 | 3.03 | 6.14 | - | - | 3.6 | 13.5 | 13.8 | 950 | 3740 | 3920 | 17.0 | 16.3 | 15.6 |

| Indoor unit combination | | | Heating capacity (kW) | | | | | | | | | Power consumption(W) | | | Standard current(A) | | |
|---|---|---|---|---|---|---|---|---|---|---|---|---|---|---|---|---|---|
| | | | Room heating capacity | | | | | | Total capacity | | | | | | | | |
| | | | A | B | C | D | E | F | Min. | Standard | Max. | Min. | Standard | Max. | 220V | 230V | 240V |
| Heating operation | 4 room | 25+25+50+50 | 2.25 | 2.25 | 4.50 | 4.50 | - | - | 3.6 | 13.5 | 13.8 | 950 | 3740 | 3920 | 17.0 | 16.3 | 15.6 |
| | | 25+25+50+60 | 2.11 | 2.11 | 4.22 | 5.06 | - | - | 3.6 | 13.5 | 13.8 | 950 | 3740 | 3920 | 17.0 | 16.3 | 15.6 |
| | | 25+25+50+71 | 1.97 | 1.97 | 3.95 | 5.61 | - | - | 3.6 | 13.5 | 13.8 | 950 | 3730 | 3920 | 17.0 | 16.2 | 15.6 |
| | | 25+25+60+60 | 1.99 | 1.99 | 4.76 | 4.76 | - | - | 3.6 | 13.5 | 13.8 | 950 | 3730 | 3920 | 17.0 | 16.2 | 15.6 |
| | | 25+25+60+71 | 1.86 | 1.86 | 4.48 | 5.30 | - | - | 3.6 | 13.5 | 13.8 | 950 | 3730 | 3920 | 17.0 | 16.2 | 15.6 |
| | | 25+25+71+71 | 1.76 | 1.76 | 4.99 | 4.99 | - | - | 3.6 | 13.5 | 13.8 | 950 | 3720 | 3920 | 16.9 | 16.2 | 15.5 |
| | | 25+35+35+35 | 2.60 | 3.63 | 3.63 | 3.63 | - | - | 3.6 | 13.5 | 13.8 | 950 | 3750 | 3920 | 17.1 | 16.3 | 15.6 |
| | | 25+35+35+50 | 2.33 | 3.26 | 3.26 | 4.66 | - | - | 3.6 | 13.5 | 13.8 | 950 | 3740 | 3920 | 17.0 | 16.3 | 15.6 |
| | | 25+35+35+60 | 2.18 | 3.05 | 3.05 | 5.23 | - | - | 3.6 | 13.5 | 13.8 | 950 | 3740 | 3920 | 17.0 | 16.3 | 15.6 |
| | | 25+35+35+71 | 2.03 | 2.85 | 2.85 | 5.77 | - | - | 3.6 | 13.5 | 13.8 | 950 | 3730 | 3920 | 17.0 | 16.2 | 15.6 |
| | | 25+35+50+50 | 2.11 | 2.95 | 4.22 | 4.22 | - | - | 3.6 | 13.5 | 13.8 | 950 | 3740 | 3920 | 17.0 | 16.3 | 15.6 |
| | | 25+35+50+60 | 1.99 | 2.78 | 3.97 | 4.76 | - | - | 3.6 | 13.5 | 13.8 | 950 | 3730 | 3920 | 17.0 | 16.2 | 15.6 |
| | | 25+35+50+71 | 1.86 | 2.61 | 3.73 | 5.30 | - | - | 3.6 | 13.5 | 13.8 | 950 | 3730 | 3920 | 17.0 | 16.2 | 15.6 |
| | | 25+35+60+60 | 1.88 | 2.63 | 4.50 | 4.50 | - | - | 3.6 | 13.5 | 13.8 | 950 | 3730 | 3920 | 17.0 | 16.2 | 15.6 |
| | | 25+35+60+71 | 1.77 | 2.47 | 4.24 | 5.02 | - | - | 3.6 | 13.5 | 13.8 | 950 | 3720 | 3920 | 16.9 | 16.2 | 15.5 |
| | | 25+50+50+50 | 1.93 | 3.86 | 3.86 | 3.86 | - | - | 3.6 | 13.5 | 13.8 | 950 | 3730 | 3920 | 17.0 | 16.2 | 15.6 |
| | | 25+50+50+60 | 1.82 | 3.65 | 3.65 | 4.38 | - | - | 3.6 | 13.5 | 13.8 | 950 | 3720 | 3920 | 16.9 | 16.2 | 15.5 |
| | | 25+50+60+60 | 1.73 | 3.46 | 4.15 | 4.15 | - | - | 3.6 | 13.5 | 13.8 | 950 | 3720 | 3920 | 16.9 | 16.2 | 15.5 |
| | | 35+35+35+35 | 3.38 | 3.38 | 3.38 | 3.38 | - | - | 3.6 | 13.5 | 13.8 | 950 | 3740 | 3920 | 17.0 | 16.3 | 15.6 |
| | | 35+35+35+50 | 3.05 | 3.05 | 3.05 | 4.35 | - | - | 3.6 | 13.5 | 13.8 | 950 | 3740 | 3920 | 17.0 | 16.3 | 15.6 |
| | | 35+35+35+60 | 2.86 | 2.86 | 2.86 | 4.91 | - | - | 3.6 | 13.5 | 13.8 | 950 | 3730 | 3920 | 17.0 | 16.2 | 15.6 |
| | | 35+35+35+71 | 2.68 | 2.68 | 2.68 | 5.45 | - | - | 3.6 | 13.5 | 13.8 | 950 | 3730 | 3920 | 17.0 | 16.2 | 15.6 |
| | | 35+35+50+50 | 2.78 | 2.78 | 3.97 | 3.97 | - | - | 3.6 | 13.5 | 13.8 | 950 | 3730 | 3920 | 17.0 | 16.2 | 15.6 |
| | | 35+35+50+60 | 2.63 | 2.63 | 3.75 | 4.50 | - | - | 3.6 | 13.5 | 13.8 | 950 | 3730 | 3920 | 17.0 | 16.2 | 15.6 |
| | | 35+35+50+71 | 2.47 | 2.47 | 3.53 | 5.02 | - | - | 3.6 | 13.5 | 13.8 | 950 | 3720 | 3920 | 16.9 | 16.2 | 15.5 |
| | | 35+35+60+60 | 2.49 | 2.49 | 4.26 | 4.26 | - | - | 3.6 | 13.5 | 13.8 | 950 | 3720 | 3920 | 16.9 | 16.2 | 15.5 |
| | | 35+50+50+50 | 2.55 | 3.65 | 3.65 | 3.65 | - | - | 3.6 | 13.5 | 13.8 | 950 | 3720 | 3920 | 16.9 | 16.2 | 15.5 |
| | | 35+50+50+60 | 2.42 | 3.46 | 3.46 | 4.15 | - | - | 3.6 | 13.5 | 13.8 | 950 | 3720 | 3920 | 16.9 | 16.2 | 15.5 |
| | 5 room | 20+20+20+20+20 | 2.70 | 2.70 | 2.70 | 2.70 | 2.70 | - | 4.0 | 13.5 | 13.8 | 1050 | 3450 | 3470 | 15.7 | 15.0 | 14.4 |
| | | 20+20+20+20+25 | 2.57 | 2.57 | 2.57 | 2.57 | 3.21 | - | 4.0 | 13.5 | 13.8 | 1050 | 3450 | 3470 | 15.7 | 15.0 | 14.4 |
| | | 20+20+20+20+35 | 2.35 | 2.35 | 2.35 | 2.35 | 4.11 | - | 4.0 | 13.5 | 13.8 | 1050 | 3440 | 3470 | 15.7 | 15.0 | 14.3 |
| | | 20+20+20+20+50 | 2.08 | 2.08 | 2.08 | 2.08 | 5.19 | - | 4.0 | 13.5 | 13.8 | 1050 | 3430 | 3470 | 15.6 | 14.9 | 14.3 |
| | | 20+20+20+20+60 | 1.93 | 1.93 | 1.93 | 1.93 | 5.79 | - | 4.0 | 13.5 | 13.8 | 1050 | 3430 | 3470 | 15.6 | 14.9 | 14.3 |
| | | 20+20+20+20+71 | 1.79 | 1.79 | 1.79 | 1.79 | 6.35 | - | 4.0 | 13.5 | 13.8 | 1050 | 3420 | 3470 | 15.6 | 14.9 | 14.3 |
| | | 20+20+20+25+25 | 2.45 | 2.45 | 2.45 | 3.07 | 3.07 | - | 4.0 | 13.5 | 13.8 | 1050 | 3450 | 3470 | 15.7 | 15.0 | 14.4 |
| | | 20+20+20+25+35 | 2.25 | 2.25 | 2.25 | 2.81 | 3.94 | - | 4.0 | 13.5 | 13.8 | 1050 | 3440 | 3470 | 15.7 | 15.0 | 14.3 |
| | | 20+20+20+25+50 | 2.00 | 2.00 | 2.00 | 2.50 | 5.00 | - | 4.0 | 13.5 | 13.8 | 1050 | 3430 | 3470 | 15.6 | 14.9 | 14.3 |
| | | 20+20+20+25+60 | 1.86 | 1.86 | 1.86 | 2.33 | 5.59 | - | 4.0 | 13.5 | 13.8 | 1050 | 3420 | 3470 | 15.6 | 14.9 | 14.3 |
| | | 20+20+20+25+71 | 1.73 | 1.73 | 1.73 | 2.16 | 6.14 | - | 4.0 | 13.5 | 13.8 | 1050 | 3420 | 3470 | 15.6 | 14.9 | 14.3 |
| | | 20+20+20+35+35 | 2.08 | 2.08 | 2.08 | 3.63 | 3.63 | - | 4.0 | 13.5 | 13.8 | 1050 | 3430 | 3470 | 15.6 | 14.9 | 14.3 |
| | | 20+20+20+35+50 | 1.86 | 1.86 | 1.86 | 3.26 | 4.66 | - | 4.0 | 13.5 | 13.8 | 1050 | 3420 | 3470 | 15.6 | 14.9 | 14.3 |
| | | 20+20+20+35+60 | 1.74 | 1.74 | 1.74 | 3.05 | 5.23 | - | 4.0 | 13.5 | 13.8 | 1050 | 3420 | 3470 | 15.6 | 14.9 | 14.3 |
| | | 20+20+20+35+71 | 1.63 | 1.63 | 1.63 | 2.85 | 5.77 | - | 4.0 | 13.5 | 13.8 | 1050 | 3410 | 3470 | 15.5 | 14.8 | 14.2 |
| | | 20+20+20+50+50 | 1.69 | 1.69 | 1.69 | 4.22 | 4.22 | - | 4.0 | 13.5 | 13.8 | 1050 | 3410 | 3470 | 15.5 | 14.8 | 14.2 |
| | | 20+20+20+50+60 | 1.59 | 1.59 | 1.59 | 3.97 | 4.76 | - | 4.0 | 13.5 | 13.8 | 1050 | 3410 | 3470 | 15.5 | 14.8 | 14.2 |
| | | 20+20+20+60+60 | 1.50 | 1.50 | 1.50 | 4.50 | 4.50 | - | 4.0 | 13.5 | 13.8 | 1050 | 3400 | 3470 | 15.5 | 14.8 | 14.2 |
| | | 20+20+20+60+71 | 1.41 | 1.41 | 1.41 | 4.24 | 5.02 | - | 4.0 | 13.5 | 13.8 | 1050 | 3390 | 3470 | 15.4 | 14.8 | 14.1 |
| | | 20+20+25+25+25 | 2.35 | 2.35 | 2.93 | 2.93 | 2.93 | - | 4.0 | 13.5 | 13.8 | 1050 | 3440 | 3470 | 15.7 | 15.0 | 14.3 |
| | | 20+20+25+25+35 | 2.16 | 2.16 | 2.70 | 2.70 | 3.78 | - | 4.0 | 13.5 | 13.8 | 1050 | 3440 | 3470 | 15.7 | 15.0 | 14.3 |
| | | 20+20+25+25+50 | 1.93 | 1.93 | 2.41 | 2.41 | 4.82 | - | 4.0 | 13.5 | 13.8 | 1050 | 3430 | 3470 | 15.6 | 14.9 | 14.3 |
| | | 20+20+25+25+60 | 1.80 | 1.80 | 2.25 | 2.25 | 5.40 | - | 4.0 | 13.5 | 13.8 | 1050 | 3420 | 3470 | 15.6 | 14.9 | 14.3 |
| | | 20+20+25+25+71 | 1.68 | 1.68 | 2.10 | 2.10 | 5.95 | - | 4.0 | 13.5 | 13.8 | 1050 | 3410 | 3470 | 15.5 | 14.8 | 14.2 |
| | | 20+20+25+35+35 | 2.00 | 2.00 | 2.50 | 3.50 | 3.50 | - | 4.0 | 13.5 | 13.8 | 1050 | 3430 | 3470 | 15.6 | 14.9 | 14.3 |
| | | 20+20+25+35+50 | 1.80 | 1.80 | 2.25 | 3.15 | 4.50 | - | 4.0 | 13.5 | 13.8 | 1050 | 3420 | 3470 | 15.6 | 14.9 | 14.3 |
| | | 20+20+25+35+60 | 1.69 | 1.69 | 2.11 | 2.95 | 5.06 | - | 4.0 | 13.5 | 13.8 | 1050 | 3410 | 3470 | 15.5 | 14.8 | 14.2 |
| | | 20+20+25+35+71 | 1.58 | 1.58 | 1.97 | 2.76 | 5.61 | - | 4.0 | 13.5 | 13.8 | 1050 | 3410 | 3470 | 15.5 | 14.8 | 14.2 |
| | | 20+20+25+50+50 | 1.64 | 1.64 | 2.05 | 4.09 | 4.09 | - | 4.0 | 13.5 | 13.8 | 1050 | 3410 | 3470 | 15.5 | 14.8 | 14.2 |
| | | 20+20+25+50+60 | 1.54 | 1.54 | 1.93 | 3.86 | 4.63 | - | 4.0 | 13.5 | 13.8 | 1050 | 3410 | 3470 | 15.5 | 14.8 | 14.2 |
| | | 20+20+25+50+71 | 1.45 | 1.45 | 1.81 | 3.63 | 5.15 | - | 4.0 | 13.5 | 13.8 | 1050 | 3400 | 3470 | 15.5 | 14.8 | 14.2 |
| | | 20+20+25+60+60 | 1.46 | 1.46 | 1.82 | 4.38 | 4.38 | - | 4.0 | 13.5 | 13.8 | 1050 | 3400 | 3470 | 15.5 | 14.8 | 14.2 |
| | | 20+20+35+35+35 | 1.86 | 1.86 | 3.26 | 3.26 | 3.26 | - | 4.0 | 13.5 | 13.8 | 1050 | 3420 | 3470 | 15.6 | 14.9 | 14.3 |
| | | 20+20+35+35+50 | 1.69 | 1.69 | 2.95 | 2.95 | 4.22 | - | 4.0 | 13.5 | 13.8 | 1050 | 3410 | 3470 | 15.5 | 14.8 | 14.2 |
| | | 20+20+35+35+60 | 1.59 | 1.59 | 2.78 | 2.78 | 4.76 | - | 4.0 | 13.5 | 13.8 | 1050 | 3410 | 3470 | 15.5 | 14.8 | 14.2 |
| | | 20+20+35+35+71 | 1.49 | 1.49 | 2.61 | 2.61 | 5.30 | - | 4.0 | 13.5 | 13.8 | 1050 | 3400 | 3470 | 15.5 | 14.8 | 14.2 |
| | | 20+20+35+50+50 | 1.54 | 1.54 | 2.70 | 3.86 | 3.86 | - | 4.0 | 13.5 | 13.8 | 1050 | 3410 | 3470 | 15.5 | 14.8 | 14.2 |
| | | 20+20+35+50+60 | 1.46 | 1.46 | 2.55 | 3.65 | 4.38 | - | 4.0 | 13.5 | 13.8 | 1050 | 3400 | 3470 | 15.5 | 14.8 | 14.2 |
| | | 20+20+35+60+60 | 1.38 | 1.38 | 2.42 | 4.15 | 4.15 | - | 4.0 | 13.5 | 13.8 | 1050 | 3390 | 3470 | 15.4 | 14.8 | 14.1 |
| | | 20+20+50+50+50 | 1.42 | 1.42 | 3.55 | 3.55 | 3.55 | - | 4.0 | 13.5 | 13.8 | 1050 | 3390 | 3470 | 15.4 | 14.8 | 14.1 |
| | | 20+25+25+25+25 | 2.25 | 2.81 | 2.81 | 2.81 | 2.81 | - | 4.0 | 13.5 | 13.8 | 1050 | 3440 | 3470 | 15.7 | 15.0 | 14.3 |
| | | 20+25+25+25+35 | 2.08 | 2.60 | 2.60 | 2.60 | 3.63 | - | 4.0 | 13.5 | 13.8 | 1050 | 3430 | 3470 | 15.6 | 14.9 | 14.3 |
| | | 20+25+25+25+50 | 1.86 | 2.33 | 2.33 | 2.33 | 4.66 | - | 4.0 | 13.5 | 13.8 | 1050 | 3420 | 3470 | 15.6 | 14.9 | 14.3 |
| | | 20+25+25+25+60 | 1.74 | 2.18 | 2.18 | 2.18 | 5.23 | - | 4.0 | 13.5 | 13.8 | 1050 | 3420 | 3470 | 15.6 | 14.9 | 14.3 |
| | | 20+25+25+25+71 | 1.63 | 2.03 | 2.03 | 2.03 | 5.77 | - | 4.0 | 13.5 | 13.8 | 1050 | 3410 | 3470 | 15.5 | 14.8 | 14.2 |
| | | 20+25+25+35+35 | 1.93 | 2.41 | 2.41 | 3.38 | 3.38 | - | 4.0 | 13.5 | 13.8 | 1050 | 3430 | 3470 | 15.6 | 14.9 | 14.3 |
| | | 20+25+25+35+50 | 1.74 | 2.18 | 2.18 | 3.05 | 4.35 | - | 4.0 | 13.5 | 13.8 | 1050 | 3420 | 3470 | 15.6 | 14.9 | 14.3 |
| | | 20+25+25+35+60 | 1.64 | 2.05 | 2.05 | 2.86 | 4.91 | - | 4.0 | 13.5 | 13.8 | 1050 | 3410 | 3470 | 15.5 | 14.8 | 14.2 |
| | | 20+25+25+35+71 | 1.53 | 1.92 | 1.92 | 2.68 | 5.45 | - | 4.0 | 13.5 | 13.8 | 1050 | 3410 | 3470 | 15.5 | 14.8 | 14.2 |

R410A

# MULTI-SPLIT SYSTEM

| Indoor unit combination | | | Heating capacity (kW) | | | | | | | | | Power consumption(W) | | | Standard current(A) | | |
|---|---|---|---|---|---|---|---|---|---|---|---|---|---|---|---|---|---|
| | | | Room heating capacity | | | | | | Total capacity | | | Min. | Standard | Max. | 220V | 230V | 240V |
| | | | A | B | C | D | E | F | Min. | Standard | Max. | | | | | | |
| Heating operation | 5 room | 20+25+25+50+50 | 1.59 | 1.99 | 1.99 | 3.97 | 3.97 | - | 4.0 | 13.5 | 13.8 | 1050 | 3410 | 3470 | 15.5 | 14.8 | 14.2 |
| | | 20+25+25+50+60 | 1.50 | 1.88 | 1.88 | 3.75 | 4.50 | - | 4.0 | 13.5 | 13.8 | 1050 | 3400 | 3470 | 15.5 | 14.8 | 14.2 |
| | | 20+25+25+50+71 | 1.41 | 1.77 | 1.77 | 3.53 | 5.02 | - | 4.0 | 13.5 | 13.8 | 1050 | 3390 | 3470 | 15.4 | 14.8 | 14.1 |
| | | 20+25+25+60+60 | 1.42 | 1.78 | 1.78 | 4.26 | 4.26 | - | 4.0 | 13.5 | 13.8 | 1050 | 3390 | 3470 | 15.4 | 14.8 | 14.1 |
| | | 20+25+35+35+35 | 1.80 | 2.25 | 3.15 | 3.15 | 3.15 | - | 4.0 | 13.5 | 13.8 | 1050 | 3420 | 3470 | 15.6 | 14.9 | 14.3 |
| | | 20+25+35+35+50 | 1.64 | 2.05 | 2.86 | 2.86 | 4.09 | - | 4.0 | 13.5 | 13.8 | 1050 | 3410 | 3470 | 15.5 | 14.8 | 14.2 |
| | | 20+25+35+35+60 | 1.54 | 1.93 | 2.70 | 2.70 | 4.63 | - | 4.0 | 13.5 | 13.8 | 1050 | 3410 | 3470 | 15.5 | 14.8 | 14.2 |
| | | 20+25+35+35+71 | 1.45 | 1.81 | 2.54 | 2.54 | 5.15 | - | 4.0 | 13.5 | 13.8 | 1050 | 3400 | 3470 | 15.5 | 14.8 | 14.2 |
| | | 20+25+35+50+50 | 1.50 | 1.88 | 2.63 | 3.75 | 3.75 | - | 4.0 | 13.5 | 13.8 | 1050 | 3400 | 3470 | 15.5 | 14.8 | 14.2 |
| | | 20+25+35+50+60 | 1.42 | 1.78 | 2.49 | 3.55 | 4.26 | - | 4.0 | 13.5 | 13.8 | 1050 | 3390 | 3470 | 15.4 | 14.8 | 14.1 |
| | | 20+25+50+50+50 | 1.38 | 1.73 | 3.46 | 3.46 | 3.46 | - | 4.0 | 13.5 | 13.8 | 1050 | 3390 | 3470 | 15.4 | 14.8 | 14.1 |
| | | 20+35+35+35+35 | 1.69 | 2.95 | 2.95 | 2.95 | 2.95 | - | 4.0 | 13.5 | 13.8 | 1050 | 3410 | 3470 | 15.5 | 14.8 | 14.2 |
| | | 20+35+35+35+50 | 1.54 | 2.70 | 2.70 | 2.70 | 3.86 | - | 4.0 | 13.5 | 13.8 | 1050 | 3410 | 3470 | 15.5 | 14.8 | 14.2 |
| | | 20+35+35+35+60 | 1.46 | 2.55 | 2.55 | 2.55 | 4.38 | - | 4.0 | 13.5 | 13.8 | 1050 | 3400 | 3470 | 15.5 | 14.8 | 14.2 |
| | | 20+35+35+50+50 | 1.42 | 2.49 | 2.49 | 3.55 | 3.55 | - | 4.0 | 13.5 | 13.8 | 1050 | 3390 | 3470 | 15.4 | 14.8 | 14.1 |
| | | 25+25+25+25+25 | 2.70 | 2.70 | 2.70 | 2.70 | 2.70 | - | 4.0 | 13.5 | 13.8 | 1050 | 3440 | 3470 | 15.7 | 15.0 | 14.3 |
| | | 25+25+25+25+35 | 2.50 | 2.50 | 2.50 | 2.50 | 3.50 | - | 4.0 | 13.5 | 13.8 | 1050 | 3430 | 3470 | 15.6 | 14.9 | 14.3 |
| | | 25+25+25+25+50 | 2.25 | 2.25 | 2.25 | 2.25 | 4.50 | - | 4.0 | 13.5 | 13.8 | 1050 | 3420 | 3470 | 15.6 | 14.9 | 14.3 |
| | | 25+25+25+25+60 | 2.11 | 2.11 | 2.11 | 2.11 | 5.06 | - | 4.0 | 13.5 | 13.8 | 1050 | 3410 | 3470 | 15.5 | 14.8 | 14.2 |
| | | 25+25+25+25+71 | 1.97 | 1.97 | 1.97 | 1.97 | 5.61 | - | 4.0 | 13.5 | 13.8 | 1050 | 3410 | 3470 | 15.5 | 14.8 | 14.2 |
| | | 25+25+25+35+35 | 2.33 | 2.33 | 2.33 | 3.26 | 3.26 | - | 4.0 | 13.5 | 13.8 | 1050 | 3420 | 3470 | 15.6 | 14.9 | 14.3 |
| | | 25+25+25+35+50 | 2.11 | 2.11 | 2.11 | 2.95 | 4.22 | - | 4.0 | 13.5 | 13.8 | 1050 | 3410 | 3470 | 15.5 | 14.8 | 14.2 |
| | | 25+25+25+35+60 | 1.99 | 1.99 | 1.99 | 2.78 | 4.76 | - | 4.0 | 13.5 | 13.8 | 1050 | 3410 | 3470 | 15.5 | 14.8 | 14.2 |
| | | 25+25+25+35+71 | 1.86 | 1.86 | 1.86 | 2.61 | 5.30 | - | 4.0 | 13.5 | 13.8 | 1050 | 3400 | 3470 | 15.5 | 14.8 | 14.2 |
| | | 25+25+25+50+50 | 1.93 | 1.93 | 1.93 | 3.86 | 3.86 | - | 4.0 | 13.5 | 13.8 | 1050 | 3410 | 3470 | 15.5 | 14.8 | 14.2 |
| | | 25+25+25+50+60 | 1.82 | 1.82 | 1.82 | 3.65 | 4.38 | - | 4.0 | 13.5 | 13.8 | 1050 | 3400 | 3470 | 15.5 | 14.8 | 14.2 |
| | | 25+25+25+60+60 | 1.73 | 1.73 | 1.73 | 4.15 | 4.15 | - | 4.0 | 13.5 | 13.8 | 1050 | 3390 | 3470 | 15.4 | 14.8 | 14.1 |
| | | 25+25+35+35+35 | 2.18 | 2.18 | 3.05 | 3.05 | 3.05 | - | 4.0 | 13.5 | 13.8 | 1050 | 3420 | 3470 | 15.6 | 14.9 | 14.3 |
| | | 25+25+35+35+50 | 1.99 | 1.99 | 2.78 | 2.78 | 3.97 | - | 4.0 | 13.5 | 13.8 | 1050 | 3410 | 3470 | 15.5 | 14.8 | 14.2 |
| | | 25+25+35+35+60 | 1.88 | 1.88 | 2.63 | 2.63 | 4.50 | - | 4.0 | 13.5 | 13.8 | 1050 | 3400 | 3470 | 15.5 | 14.8 | 14.2 |
| | | 25+25+35+35+71 | 1.77 | 1.77 | 2.47 | 2.47 | 5.02 | - | 4.0 | 13.5 | 13.8 | 1050 | 3390 | 3470 | 15.4 | 14.8 | 14.1 |
| | | 25+25+35+50+50 | 1.82 | 1.82 | 2.55 | 3.65 | 3.65 | - | 4.0 | 13.5 | 13.8 | 1050 | 3400 | 3470 | 15.5 | 14.8 | 14.2 |
| | | 25+25+35+50+60 | 1.73 | 1.73 | 2.42 | 3.46 | 4.15 | - | 4.0 | 13.5 | 13.8 | 1050 | 3390 | 3470 | 15.4 | 14.8 | 14.1 |
| | | 25+35+35+35+35 | 2.05 | 2.86 | 2.86 | 2.86 | 2.86 | - | 4.0 | 13.5 | 13.8 | 1050 | 3410 | 3470 | 15.5 | 14.8 | 14.2 |
| | | 25+35+35+35+50 | 1.88 | 2.63 | 2.63 | 2.63 | 3.75 | - | 4.0 | 13.5 | 13.8 | 1050 | 3400 | 3470 | 15.5 | 14.8 | 14.2 |
| | | 25+35+35+35+60 | 1.78 | 2.49 | 2.49 | 2.49 | 4.26 | - | 4.0 | 13.5 | 13.8 | 1050 | 3390 | 3470 | 15.4 | 14.8 | 14.1 |
| | | 25+35+35+50+50 | 1.73 | 2.42 | 2.42 | 3.46 | 3.46 | - | 4.0 | 13.5 | 13.8 | 1050 | 3390 | 3470 | 15.4 | 14.8 | 14.1 |
| | | 35+35+35+35+35 | 2.70 | 2.70 | 2.70 | 2.70 | 2.70 | - | 4.0 | 13.5 | 13.8 | 1050 | 3410 | 3470 | 15.5 | 14.8 | 14.2 |
| | | 35+35+35+35+50 | 2.49 | 2.49 | 2.49 | 2.49 | 3.55 | - | 4.0 | 13.5 | 13.8 | 1050 | 3390 | 3470 | 15.4 | 14.8 | 14.1 |
| | 6 room | 20+20+20+20+20+20 | 2.25 | 2.25 | 2.25 | 2.25 | 2.25 | 2.25 | 4.5 | 13.5 | 13.8 | 1150 | 3330 | 3420 | 15.2 | 14.5 | 13.9 |
| | | 20+20+20+20+20+25 | 2.16 | 2.16 | 2.16 | 2.16 | 2.16 | 2.70 | 4.5 | 13.5 | 13.8 | 1150 | 3330 | 3420 | 15.2 | 14.5 | 13.9 |
| | | 20+20+20+20+20+35 | 2.00 | 2.00 | 2.00 | 2.00 | 2.00 | 3.50 | 4.5 | 13.5 | 13.8 | 1150 | 3330 | 3420 | 15.2 | 14.5 | 13.9 |
| | | 20+20+20+20+20+50 | 1.80 | 1.80 | 1.80 | 1.80 | 1.80 | 4.50 | 4.5 | 13.5 | 13.8 | 1150 | 3320 | 3420 | 15.1 | 14.4 | 13.8 |
| | | 20+20+20+20+20+60 | 1.69 | 1.69 | 1.69 | 1.69 | 1.69 | 5.06 | 4.5 | 13.5 | 13.8 | 1150 | 3320 | 3420 | 15.1 | 14.4 | 13.8 |
| | | 20+20+20+20+20+71 | 1.58 | 1.58 | 1.58 | 1.58 | 1.58 | 5.61 | 4.5 | 13.5 | 13.8 | 1150 | 3310 | 3420 | 15.1 | 14.4 | 13.8 |
| | | 20+20+20+20+25+25 | 2.08 | 2.08 | 2.08 | 2.08 | 2.60 | 2.60 | 4.5 | 13.5 | 13.8 | 1150 | 3330 | 3420 | 15.2 | 14.5 | 13.9 |
| | | 20+20+20+20+25+35 | 1.93 | 1.93 | 1.93 | 1.93 | 2.41 | 3.38 | 4.5 | 13.5 | 13.8 | 1150 | 3320 | 3420 | 15.1 | 14.4 | 13.8 |
| | | 20+20+20+20+25+50 | 1.74 | 1.74 | 1.74 | 1.74 | 2.18 | 4.35 | 4.5 | 13.5 | 13.8 | 1150 | 3320 | 3420 | 15.1 | 14.4 | 13.8 |
| | | 20+20+20+20+25+60 | 1.64 | 1.64 | 1.64 | 1.64 | 2.05 | 4.91 | 4.5 | 13.5 | 13.8 | 1150 | 3320 | 3420 | 15.1 | 14.4 | 13.8 |
| | | 20+20+20+20+25+71 | 1.53 | 1.53 | 1.53 | 1.53 | 1.92 | 5.45 | 4.5 | 13.5 | 13.8 | 1150 | 3310 | 3420 | 15.1 | 14.4 | 13.8 |
| | | 20+20+20+20+35+35 | 1.80 | 1.80 | 1.80 | 1.80 | 3.15 | 3.15 | 4.5 | 13.5 | 13.8 | 1150 | 3320 | 3420 | 15.1 | 14.4 | 13.8 |
| | | 20+20+20+20+35+50 | 1.64 | 1.64 | 1.64 | 1.64 | 2.86 | 4.09 | 4.5 | 13.5 | 13.8 | 1150 | 3320 | 3420 | 15.1 | 14.4 | 13.8 |
| | | 20+20+20+20+35+60 | 1.54 | 1.54 | 1.54 | 1.54 | 2.70 | 4.63 | 4.5 | 13.5 | 13.8 | 1150 | 3310 | 3420 | 15.1 | 14.4 | 13.8 |
| | | 20+20+20+20+35+71 | 1.45 | 1.45 | 1.45 | 1.45 | 2.54 | 5.15 | 4.5 | 13.5 | 13.8 | 1150 | 3310 | 3420 | 15.1 | 14.4 | 13.8 |
| | | 20+20+20+20+50+50 | 1.50 | 1.50 | 1.50 | 1.50 | 3.75 | 3.75 | 4.5 | 13.5 | 13.8 | 1150 | 3310 | 3420 | 15.1 | 14.4 | 13.8 |
| | | 20+20+20+20+50+60 | 1.42 | 1.42 | 1.42 | 1.42 | 3.55 | 4.26 | 4.5 | 13.5 | 13.8 | 1150 | 3310 | 3420 | 15.1 | 14.4 | 13.8 |
| | | 20+20+20+25+25+25 | 2.00 | 2.00 | 2.00 | 2.50 | 2.50 | 2.50 | 4.5 | 13.5 | 13.8 | 1150 | 3330 | 3420 | 15.2 | 14.5 | 13.9 |
| | | 20+20+20+25+25+35 | 1.86 | 1.86 | 1.86 | 2.33 | 2.33 | 3.26 | 4.5 | 13.5 | 13.8 | 1150 | 3320 | 3420 | 15.1 | 14.4 | 13.8 |
| | | 20+20+20+25+25+50 | 1.69 | 1.69 | 1.69 | 2.11 | 2.11 | 4.22 | 4.5 | 13.5 | 13.8 | 1150 | 3320 | 3420 | 15.1 | 14.4 | 13.8 |
| | | 20+20+20+25+25+60 | 1.59 | 1.59 | 1.59 | 1.99 | 1.99 | 4.76 | 4.5 | 13.5 | 13.8 | 1150 | 3310 | 3420 | 15.1 | 14.4 | 13.8 |
| | | 20+20+20+25+25+71 | 1.49 | 1.49 | 1.49 | 1.86 | 1.86 | 5.30 | 4.5 | 13.5 | 13.8 | 1150 | 3310 | 3420 | 15.1 | 14.4 | 13.8 |
| | | 20+20+20+25+35+35 | 1.74 | 1.74 | 1.74 | 2.18 | 3.05 | 3.05 | 4.5 | 13.5 | 13.8 | 1150 | 3320 | 3420 | 15.1 | 14.4 | 13.8 |
| | | 20+20+20+25+35+50 | 1.59 | 1.59 | 1.59 | 1.99 | 2.78 | 3.97 | 4.5 | 13.5 | 13.8 | 1150 | 3310 | 3420 | 15.1 | 14.4 | 13.8 |
| | | 20+20+20+25+35+60 | 1.50 | 1.50 | 1.50 | 1.88 | 2.63 | 4.50 | 4.5 | 13.5 | 13.8 | 1150 | 3310 | 3420 | 15.1 | 14.4 | 13.8 |
| | | 20+20+20+25+50+50 | 1.46 | 1.46 | 1.46 | 1.82 | 3.65 | 3.65 | 4.5 | 13.5 | 13.8 | 1150 | 3310 | 3420 | 15.1 | 14.4 | 13.8 |
| | | 20+20+20+25+50+60 | 1.38 | 1.38 | 1.38 | 1.73 | 3.46 | 4.15 | 4.5 | 13.5 | 13.8 | 1150 | 3310 | 3420 | 15.1 | 14.4 | 13.8 |
| | | 20+20+20+35+35+35 | 1.64 | 1.64 | 1.64 | 2.86 | 2.86 | 2.86 | 4.5 | 13.5 | 13.8 | 1150 | 3320 | 3420 | 15.1 | 14.4 | 13.8 |
| | | 20+20+20+35+35+50 | 1.50 | 1.50 | 1.50 | 2.63 | 2.63 | 3.75 | 4.5 | 13.5 | 13.8 | 1150 | 3310 | 3420 | 15.1 | 14.4 | 13.8 |
| | | 20+20+20+35+35+60 | 1.42 | 1.42 | 1.42 | 2.49 | 2.49 | 4.26 | 4.5 | 13.5 | 13.8 | 1150 | 3310 | 3420 | 15.1 | 14.4 | 13.8 |
| | | 20+20+20+35+50+50 | 1.38 | 1.38 | 1.38 | 2.42 | 3.46 | 3.46 | 4.5 | 13.5 | 13.8 | 1150 | 3310 | 3420 | 15.1 | 14.4 | 13.8 |
| | | 20+20+25+25+25+25 | 1.93 | 1.93 | 2.41 | 2.41 | 2.41 | 2.41 | 4.5 | 13.5 | 13.8 | 1150 | 3320 | 3420 | 15.1 | 14.4 | 13.8 |
| | | 20+20+25+25+25+35 | 1.80 | 1.80 | 2.25 | 2.25 | 2.25 | 3.15 | 4.5 | 13.5 | 13.8 | 1150 | 3320 | 3420 | 15.1 | 14.4 | 13.8 |
| | | 20+20+25+25+25+50 | 1.64 | 1.64 | 2.05 | 2.05 | 2.05 | 4.09 | 4.5 | 13.5 | 13.8 | 1150 | 3320 | 3420 | 15.1 | 14.4 | 13.8 |
| | | 20+20+25+25+25+60 | 1.54 | 1.54 | 1.93 | 1.93 | 1.93 | 4.63 | 4.5 | 13.5 | 13.8 | 1150 | 3310 | 3420 | 15.1 | 14.4 | 13.8 |
| | | 20+20+25+25+25+71 | 1.45 | 1.45 | 1.81 | 1.81 | 1.81 | 5.15 | 4.5 | 13.5 | 13.8 | 1150 | 3310 | 3420 | 15.1 | 14.4 | 13.8 |
| | | 20+20+25+25+35+35 | 1.69 | 1.69 | 2.11 | 2.11 | 2.95 | 2.95 | 4.5 | 13.5 | 13.8 | 1150 | 3320 | 3420 | 15.1 | 14.4 | 13.8 |
| | | 20+20+25+25+35+50 | 1.54 | 1.54 | 1.93 | 1.93 | 2.70 | 3.86 | 4.5 | 13.5 | 13.8 | 1150 | 3310 | 3420 | 15.1 | 14.4 | 13.8 |

| Indoor unit combination | | | Heating capacity (kW) | | | | | | | | | Power consumption(W) | | | Standard current(A) | | |
|---|---|---|---|---|---|---|---|---|---|---|---|---|---|---|---|---|---|
| | | | Room heating capacity | | | | | | Total capacity | | | Min. | Standard | Max. | 220V | 230V | 240V |
| | | | A | B | C | D | E | F | Min. | Standard | Max. | | | | | | |
| Heating operation | 6 room | 20+20+25+25+35+60 | 1.46 | 1.46 | 1.82 | 1.82 | 2.55 | 4.38 | 4.5 | 13.5 | 13.8 | 1150 | 3310 | 3420 | 15.1 | 14.4 | 13.8 |
| | | 20+20+25+25+50+50 | 1.42 | 1.42 | 1.78 | 1.78 | 3.55 | 3.55 | 4.5 | 13.5 | 13.8 | 1150 | 3310 | 3420 | 15.1 | 14.4 | 13.8 |
| | | 20+20+25+35+35+35 | 1.59 | 1.59 | 1.99 | 2.78 | 2.78 | 2.78 | 4.5 | 13.5 | 13.8 | 1150 | 3310 | 3420 | 15.1 | 14.4 | 13.8 |
| | | 20+20+25+35+35+50 | 1.46 | 1.46 | 1.82 | 2.55 | 2.55 | 3.65 | 4.5 | 13.5 | 13.8 | 1150 | 3310 | 3420 | 15.1 | 14.4 | 13.8 |
| | | 20+20+25+35+35+60 | 1.38 | 1.38 | 1.73 | 2.42 | 2.42 | 4.15 | 4.5 | 13.5 | 13.8 | 1150 | 3310 | 3420 | 15.1 | 14.4 | 13.8 |
| | | 20+20+35+35+35+35 | 1.50 | 1.50 | 2.63 | 2.63 | 2.63 | 2.63 | 4.5 | 13.5 | 13.8 | 1150 | 3310 | 3420 | 15.1 | 14.4 | 13.8 |
| | | 20+20+35+35+35+50 | 1.38 | 1.38 | 2.42 | 2.42 | 2.42 | 3.46 | 4.5 | 13.5 | 13.8 | 1150 | 3310 | 3420 | 15.1 | 14.4 | 13.8 |
| | | 20+25+25+25+25+25 | 1.86 | 2.33 | 2.33 | 2.33 | 2.33 | 2.33 | 4.5 | 13.5 | 13.8 | 1150 | 3320 | 3420 | 15.1 | 14.4 | 13.8 |
| | | 20+25+25+25+25+35 | 1.74 | 2.18 | 2.18 | 2.18 | 2.18 | 3.05 | 4.5 | 13.5 | 13.8 | 1150 | 3320 | 3420 | 15.1 | 14.4 | 13.8 |
| | | 20+25+25+25+25+50 | 1.59 | 1.99 | 1.99 | 1.99 | 1.99 | 3.97 | 4.5 | 13.5 | 13.8 | 1150 | 3310 | 3420 | 15.1 | 14.4 | 13.8 |
| | | 20+25+25+25+25+60 | 1.50 | 1.88 | 1.88 | 1.88 | 1.88 | 4.50 | 4.5 | 13.5 | 13.8 | 1150 | 3310 | 3420 | 15.1 | 14.4 | 13.8 |
| | | 20+25+25+25+25+71 | 1.41 | 1.77 | 1.77 | 1.77 | 1.77 | 5.02 | 4.5 | 13.5 | 13.8 | 1150 | 3310 | 3420 | 15.1 | 14.4 | 13.8 |
| | | 20+25+25+25+35+35 | 1.64 | 2.05 | 2.05 | 2.05 | 2.86 | 2.86 | 4.5 | 13.5 | 13.8 | 1150 | 3320 | 3420 | 15.1 | 14.4 | 13.8 |
| | | 20+25+25+25+35+50 | 1.50 | 1.88 | 1.88 | 1.88 | 2.63 | 3.75 | 4.5 | 13.5 | 13.8 | 1150 | 3310 | 3420 | 15.1 | 14.4 | 13.8 |
| | | 20+25+25+25+35+60 | 1.42 | 1.78 | 1.78 | 1.78 | 2.49 | 4.26 | 4.5 | 13.5 | 13.8 | 1150 | 3310 | 3420 | 15.1 | 14.4 | 13.8 |
| | | 20+25+25+25+50+50 | 1.38 | 1.73 | 1.73 | 1.73 | 3.46 | 3.46 | 4.5 | 13.5 | 13.8 | 1150 | 3310 | 3420 | 15.1 | 14.4 | 13.8 |
| | | 20+25+25+35+35+35 | 1.54 | 1.93 | 1.93 | 2.70 | 2.70 | 2.70 | 4.5 | 13.5 | 13.8 | 1150 | 3310 | 3420 | 15.1 | 14.4 | 13.8 |
| | | 20+25+25+35+35+50 | 1.42 | 1.78 | 1.78 | 2.49 | 2.49 | 3.55 | 4.5 | 13.5 | 13.8 | 1150 | 3310 | 3420 | 15.1 | 14.4 | 13.8 |
| | | 20+25+35+35+35+35 | 1.46 | 1.82 | 2.55 | 2.55 | 2.55 | 2.55 | 4.5 | 13.5 | 13.8 | 1150 | 3310 | 3420 | 15.1 | 14.4 | 13.8 |
| | | 20+35+35+35+35+35 | 1.38 | 2.42 | 2.42 | 2.42 | 2.42 | 2.42 | 4.5 | 13.5 | 13.8 | 1150 | 3310 | 3420 | 15.1 | 14.4 | 13.8 |
| | | 25+25+25+25+25+25 | 2.25 | 2.25 | 2.25 | 2.25 | 2.25 | 2.25 | 4.5 | 13.5 | 13.8 | 1150 | 3320 | 3420 | 15.1 | 14.4 | 13.8 |
| | | 25+25+25+25+25+35 | 2.11 | 2.11 | 2.11 | 2.11 | 2.11 | 2.95 | 4.5 | 13.5 | 13.8 | 1150 | 3320 | 3420 | 15.1 | 14.4 | 13.8 |
| | | 25+25+25+25+25+50 | 1.93 | 1.93 | 1.93 | 1.93 | 1.93 | 3.86 | 4.5 | 13.5 | 13.8 | 1150 | 3310 | 3420 | 15.1 | 14.4 | 13.8 |
| | | 25+25+25+25+25+60 | 1.82 | 1.82 | 1.82 | 1.82 | 1.82 | 4.38 | 4.5 | 13.5 | 13.8 | 1150 | 3310 | 3420 | 15.1 | 14.4 | 13.8 |
| | | 25+25+25+25+35+35 | 1.99 | 1.99 | 1.99 | 1.99 | 2.78 | 2.78 | 4.5 | 13.5 | 13.8 | 1150 | 3310 | 3420 | 15.1 | 14.4 | 13.8 |
| | | 25+25+25+25+35+50 | 1.82 | 1.82 | 1.82 | 1.82 | 2.55 | 3.65 | 4.5 | 13.5 | 13.8 | 1150 | 3310 | 3420 | 15.1 | 14.4 | 13.8 |
| | | 25+25+25+25+35+60 | 1.73 | 1.73 | 1.73 | 1.73 | 2.42 | 4.15 | 4.5 | 13.5 | 13.8 | 1150 | 3310 | 3420 | 15.1 | 14.4 | 13.8 |
| | | 25+25+25+35+35+35 | 1.88 | 1.88 | 1.88 | 2.63 | 2.63 | 2.63 | 4.5 | 13.5 | 13.8 | 1150 | 3310 | 3420 | 15.1 | 14.4 | 13.8 |
| | | 25+25+25+35+35+50 | 1.73 | 1.73 | 1.73 | 2.42 | 2.42 | 3.46 | 4.5 | 13.5 | 13.8 | 1150 | 3310 | 3420 | 15.1 | 14.4 | 13.8 |
| | | 25+25+35+35+35+35 | 1.78 | 1.78 | 2.49 | 2.49 | 2.49 | 2.49 | 4.5 | 13.5 | 13.8 | 1150 | 3310 | 3420 | 15.1 | 14.4 | 13.8 |

| Indoor unit combination | | | Cooling capacity (kW) | | | | | | | | | Power consumption(W) | | | Standard current(A) | | |
|---|---|---|---|---|---|---|---|---|---|---|---|---|---|---|---|---|---|
| | | | Room cooling capacity | | | | | | Total capacity | | | Min. | Standard | Max. | 220V | 230V | 240V |
| | | | A | B | C | D | E | F | Min. | Standard | Max. | | | | | | |
| Cooling operation | 1 room | 20 | 2.0 | - | - | - | - | - | 1.8 | 2.0 | 2.7 | 650 | 780 | 1100 | 3.6 | 3.4 | 3.3 |
| | | 25 | 2.5 | - | - | - | - | - | 1.8 | 2.5 | 3.2 | 650 | 1000 | 1350 | 4.6 | 4.4 | 4.2 |
| | | 35 | 3.5 | - | - | - | - | - | 1.8 | 3.5 | 3.7 | 650 | 1500 | 1600 | 6.9 | 6.6 | 6.3 |
| | | 50 | 5.0 | - | - | - | - | - | 1.8 | 5.0 | 5.8 | 650 | 2150 | 2500 | 9.9 | 9.4 | 9.0 |
| | | 60 | 6.0 | - | - | - | - | - | 1.8 | 6.0 | 6.7 | 650 | 2720 | 3000 | 12.5 | 11.9 | 11.4 |
| | | 71 | 7.1 | - | - | - | - | - | 1.8 | 7.1 | 7.2 | 650 | 3250 | 3080 | 14.9 | 14.3 | 13.7 |
| | 2 room | 20+20 | 2.00 | 2.00 | - | - | - | - | 3.0 | 4.0 | 5.4 | 740 | 960 | 1460 | 4.4 | 4.2 | 4.0 |
| | | 20+25 | 2.00 | 2.50 | - | - | - | - | 3.0 | 4.5 | 5.9 | 740 | 1100 | 1820 | 5.1 | 4.8 | 4.6 |
| | | 20+35 | 2.00 | 3.50 | - | - | - | - | 3.0 | 5.5 | 6.4 | 740 | 1500 | 2020 | 6.9 | 6.6 | 6.3 |
| | | 20+50 | 2.00 | 5.00 | - | - | - | - | 3.0 | 7.0 | 8.5 | 740 | 2290 | 2820 | 10.5 | 10.1 | 9.6 |
| | | 20+60 | 2.00 | 6.00 | - | - | - | - | 3.0 | 8.0 | 9.4 | 740 | 2660 | 3360 | 12.2 | 11.7 | 11.2 |
| | | 20+71 | 2.00 | 7.10 | - | - | - | - | 3.0 | 9.1 | 9.9 | 740 | 3100 | 3780 | 14.1 | 13.5 | 12.9 |
| | | 25+25 | 2.50 | 2.50 | - | - | - | - | 3.0 | 5.0 | 6.8 | 740 | 1420 | 2200 | 6.5 | 6.2 | 6.0 |
| | | 25+35 | 2.50 | 3.50 | - | - | - | - | 3.0 | 6.0 | 6.9 | 740 | 1810 | 2320 | 8.3 | 7.9 | 7.6 |
| | | 25+50 | 2.50 | 5.00 | - | - | - | - | 3.0 | 7.5 | 9.0 | 740 | 2470 | 3220 | 11.3 | 10.8 | 10.4 |
| | | 25+60 | 2.50 | 6.00 | - | - | - | - | 3.0 | 8.5 | 9.4 | 740 | 2810 | 3360 | 12.9 | 12.3 | 11.8 |
| | | 25+71 | 2.53 | 7.17 | | | | | 3.0 | 9.7 | 10.4 | 740 | 3350 | 4020 | 15.4 | 14.7 | 14.1 |
| | | 35+35 | 3.50 | 3.50 | - | - | - | - | 3.0 | 7.0 | 7.4 | 740 | 2290 | 2820 | 10.5 | 10.1 | 9.6 |
| | | 35+50 | 3.50 | 5.00 | - | - | - | - | 3.0 | 8.5 | 9.5 | 740 | 2810 | 3620 | 12.9 | 12.3 | 11.8 |
| | | 35+60 | 3.50 | 6.00 | - | - | - | - | 3.0 | 9.5 | 10.4 | 740 | 3280 | 3990 | 15.1 | 14.4 | 13.8 |
| | | 35+71 | 3.50 | 7.10 | - | - | - | - | 3.0 | 10.6 | 10.9 | 740 | 3760 | 4250 | 17.1 | 16.3 | 15.7 |
| | | 50+50 | 5.00 | 5.00 | - | - | - | - | 3.0 | 10.0 | 10.8 | 740 | 3520 | 4050 | 16.2 | 15.5 | 14.8 |
| | | 50+60 | 5.00 | 6.00 | - | - | - | - | 3.0 | 11.0 | 12.0 | 740 | 3870 | 4410 | 17.8 | 17.0 | 16.3 |
| | | 50+71 | 4.96 | 7.04 | - | - | - | - | 3.0 | 12.0 | 12.0 | 740 | 4410 | 4410 | 20.0 | 19.2 | 18.4 |
| | | 60+60 | 6.00 | 6.00 | - | - | - | - | 3.0 | 12.0 | 12.0 | 740 | 4410 | 4410 | 20.2 | 19.4 | 18.6 |
| | | 60+71 | 5.73 | 6.77 | - | - | - | - | 3.0 | 12.5 | 12.5 | 740 | 4710 | 4710 | 21.4 | 20.5 | 19.6 |
| | | 71+71 | 6.25 | 6.25 | - | - | - | - | 3.0 | 12.5 | 12.5 | 740 | 4710 | 4710 | 21.2 | 20.3 | 19.4 |
| | 3 room | 20+20+20 | 2.00 | 2.00 | 2.00 | - | - | - | 3.7 | 6.0 | 8.1 | 880 | 1530 | 2560 | 7.0 | 6.7 | 6.4 |
| | | 20+20+25 | 2.00 | 2.00 | 2.50 | - | - | - | 3.7 | 6.5 | 8.6 | 880 | 1730 | 2700 | 7.9 | 7.6 | 7.3 |
| | | 20+20+35 | 2.00 | 2.00 | 3.50 | - | - | - | 3.7 | 7.5 | 9.1 | 880 | 2080 | 3120 | 9.6 | 9.1 | 8.8 |
| | | 20+20+50 | 2.00 | 2.00 | 5.00 | - | - | - | 3.7 | 9.0 | 11.2 | 880 | 2730 | 4120 | 12.5 | 12.0 | 11.5 |
| | | 20+20+60 | 2.00 | 2.00 | 6.00 | - | - | - | 3.7 | 10.0 | 12.1 | 880 | 3280 | 4680 | 15.1 | 14.4 | 13.8 |
| | | 20+20+71 | 2.00 | 2.00 | 7.10 | - | - | - | 3.7 | 11.1 | 12.6 | 880 | 3930 | 4710 | 18.0 | 17.3 | 16.5 |
| | | 20+25+25 | 2.00 | 2.50 | 2.50 | - | - | - | 3.7 | 7.0 | 9.1 | 880 | 1940 | 3210 | 8.9 | 8.5 | 8.2 |
| | | 20+25+35 | 2.00 | 2.50 | 3.50 | - | - | - | 3.7 | 8.0 | 9.6 | 880 | 2440 | 3450 | 11.2 | 10.7 | 10.3 |
| | | 20+25+50 | 2.00 | 2.50 | 5.00 | - | - | - | 3.7 | 9.5 | 11.7 | 880 | 3130 | 4480 | 14.4 | 13.7 | 13.2 |
| | | 20+25+60 | 2.00 | 2.50 | 6.00 | - | - | - | 3.7 | 10.5 | 12.6 | 880 | 3770 | 4800 | 17.3 | 16.6 | 15.9 |
| | | 20+25+71 | 2.00 | 2.50 | 7.10 | - | - | - | 3.7 | 11.6 | 12.6 | 880 | 4210 | 4800 | 19.1 | 18.3 | 17.5 |
| | | 20+35+35 | 2.00 | 3.50 | 3.50 | - | - | - | 3.7 | 9.0 | 10.1 | 880 | 2920 | 3850 | 13.4 | 12.8 | 12.3 |
| | | 20+35+50 | 2.00 | 3.50 | 5.00 | - | - | - | 3.7 | 10.5 | 12.0 | 880 | 3770 | 4450 | 17.3 | 16.6 | 15.9 |
| | | 20+35+60 | 2.00 | 3.50 | 6.00 | - | - | - | 3.7 | 11.5 | 12.6 | 880 | 4150 | 4800 | 19.1 | 18.2 | 17.5 |
| | | 20+35+71 | 1.98 | 3.47 | 7.04 | - | - | - | 4.7 | 12.5 | 12.6 | 880 | 4670 | 4800 | 21.2 | 20.3 | 19.5 |
| | | 20+50+50 | 2.00 | 5.00 | 5.00 | - | - | - | 3.7 | 12.0 | 12.6 | 880 | 4440 | 4800 | 20.4 | 19.5 | 18.7 |

R410A

# MULTI-SPLIT SYSTEM

| Indoor unit combination | | | Cooling capacity (kW) | | | | | | | | | Power consumption(W) | | | Standard current(A) | | |
|---|---|---|---|---|---|---|---|---|---|---|---|---|---|---|---|---|---|
| | | | Room cooling capacity | | | | | | Total capacity | | | | | | | | |
| | | | A | B | C | D | E | F | Min. | Standard | Max. | Min. | Standard | Max. | 220V | 230V | 240V |
| Cooling operation | 3 room | 20+50+60 | 1.92 | 4.81 | 5.77 | - | - | - | 3.7 | 12.5 | 12.6 | 880 | 4670 | 4800 | 21.4 | 20.5 | 19.7 |
| | | 20+50+71 | 1.77 | 4.43 | 6.29 | - | - | - | 3.7 | 12.5 | 12.6 | 881 | 4670 | 4800 | 21.4 | 20.5 | 19.7 |
| | | 20+60+60 | 1.79 | 5.36 | 5.36 | - | - | - | 3.7 | 12.5 | 12.6 | 881 | 4670 | 4800 | 21.4 | 20.5 | 19.7 |
| | | 20+60+71 | 1.66 | 4.97 | 5.88 | - | - | - | 3.7 | 12.5 | 12.6 | 881 | 4670 | 4800 | 21.4 | 20.5 | 19.7 |
| | | 20+71+71 | 1.54 | 5.48 | 5.48 | - | - | - | 3.7 | 12.5 | 12.6 | 881 | 4660 | 4800 | 21.4 | 20.5 | 19.6 |
| | | 25+25+25 | 2.50 | 2.50 | 2.50 | - | - | - | 3.7 | 7.5 | 9.6 | 880 | 2130 | 3640 | 9.8 | 9.4 | 9.0 |
| | | 25+25+35 | 2.50 | 2.50 | 3.50 | - | - | - | 3.7 | 8.5 | 10.1 | 880 | 2650 | 3900 | 12.2 | 11.6 | 11.2 |
| | | 25+25+50 | 2.50 | 2.50 | 5.00 | - | - | - | 3.7 | 10.0 | 12.6 | 880 | 3420 | 4800 | 15.7 | 15.0 | 14.4 |
| | | 25+25+60 | 2.50 | 2.50 | 6.00 | - | - | - | 3.7 | 11.0 | 12.6 | 880 | 3910 | 4800 | 18.0 | 17.2 | 16.5 |
| | | 25+25+71 | 2.58 | 2.58 | 7.33 | | | | 3.7 | 12.5 | 12.6 | 880 | 4670 | 4800 | 21.2 | 20.3 | 19.5 |
| | | 25+35+35 | 2.50 | 3.50 | 3.50 | - | - | - | 3.7 | 9.5 | 10.4 | 880 | 3130 | 3910 | 14.4 | 13.7 | 13.2 |
| | | 25+35+50 | 2.50 | 3.50 | 5.00 | - | - | - | 3.7 | 11.0 | 12.6 | 880 | 3910 | 4800 | 18.0 | 17.2 | 16.5 |
| | | 25+35+60 | 2.50 | 3.50 | 6.00 | - | - | - | 3.7 | 12.0 | 12.6 | 880 | 4440 | 4800 | 20.4 | 19.5 | 18.7 |
| | | 25+35+71 | 2.39 | 3.34 | 6.77 | | | | 3.7 | 12.5 | 12.6 | 880 | 4670 | 4800 | 21.4 | 20.5 | 19.7 |
| | | 25+50+50 | 2.50 | 5.00 | 5.00 | - | - | - | 3.7 | 12.5 | 12.6 | 880 | 4670 | 4800 | 21.4 | 20.5 | 19.7 |
| | | 25+50+60 | 2.31 | 4.63 | 5.56 | - | - | - | 3.7 | 12.5 | 12.6 | 880 | 4670 | 4800 | 21.4 | 20.5 | 19.7 |
| | | 25+50+71 | 2.14 | 4.28 | 6.08 | - | - | - | 3.7 | 12.5 | 12.6 | 880 | 4670 | 4800 | 21.4 | 20.5 | 19.7 |
| | | 25+60+60 | 2.16 | 5.17 | 5.17 | - | - | - | 3.7 | 12.5 | 12.6 | 880 | 4670 | 4800 | 21.4 | 20.5 | 19.7 |
| | | 25+60+71 | 2.00 | 4.81 | 5.69 | - | - | - | 3.7 | 12.5 | 12.6 | 880 | 4670 | 4800 | 21.4 | 20.5 | 19.7 |
| | | 25+71+71 | 1.87 | 5.31 | 5.31 | - | - | - | 3.7 | 12.5 | 12.6 | 880 | 4670 | 4800 | 21.4 | 20.5 | 19.7 |
| | | 35+35+35 | 3.50 | 3.50 | 3.50 | - | - | - | 3.7 | 10.5 | 10.9 | 880 | 3770 | 4180 | 17.3 | 16.6 | 15.9 |
| | | 35+35+50 | 3.50 | 3.50 | 5.00 | - | - | - | 3.7 | 12.0 | 12.6 | 880 | 4440 | 4800 | 20.4 | 19.5 | 18.7 |
| | | 35+35+60 | 3.37 | 3.37 | 5.77 | - | - | - | 3.7 | 12.5 | 12.6 | 880 | 4670 | 4800 | 21.4 | 20.5 | 19.7 |
| | | 35+35+71 | 3.10 | 3.10 | 6.29 | - | - | - | 3.7 | 12.5 | 12.6 | 880 | 4660 | 4800 | 21.2 | 20.3 | 19.4 |
| | | 35+50+50 | 3.24 | 4.63 | 4.63 | - | - | - | 3.7 | 12.5 | 12.6 | 880 | 4670 | 4800 | 21.4 | 20.5 | 19.7 |
| | | 35+50+60 | 3.02 | 4.31 | 5.17 | - | - | - | 3.7 | 12.5 | 12.6 | 880 | 4660 | 4800 | 21.4 | 20.5 | 19.6 |
| | | 35+50+71 | 2.80 | 4.01 | 5.69 | - | - | - | 3.7 | 12.5 | 12.6 | 880 | 4660 | 4800 | 21.4 | 20.5 | 19.6 |
| | | 35+60+60 | 2.82 | 4.84 | 4.84 | - | - | - | 3.7 | 12.5 | 12.6 | 880 | 4660 | 4800 | 21.4 | 20.5 | 19.6 |
| | | 35+60+71 | 2.64 | 4.52 | 5.35 | - | - | - | 3.7 | 12.5 | 12.6 | 880 | 4660 | 4800 | 21.4 | 20.5 | 19.6 |
| | | 35+71+71 | 2.47 | 5.01 | 5.01 | - | - | - | 3.7 | 12.5 | 12.6 | 880 | 4650 | 4800 | 21.3 | 20.4 | 19.6 |
| | | 50+50+50 | 4.17 | 4.17 | 4.17 | - | - | - | 3.7 | 12.5 | 12.6 | 880 | 4660 | 4800 | 21.4 | 20.5 | 19.6 |
| | | 50+50+60 | 3.91 | 3.91 | 4.69 | - | - | - | 3.7 | 12.5 | 12.6 | 880 | 4660 | 4800 | 21.4 | 20.5 | 19.6 |
| | | 50+50+71 | 3.65 | 3.65 | 5.19 | - | - | - | 3.7 | 12.5 | 12.6 | 880 | 4650 | 4800 | 21.3 | 20.4 | 19.6 |
| | | 50+60+60 | 3.68 | 4.41 | 4.41 | - | - | - | 3.7 | 12.5 | 12.6 | 880 | 4650 | 4800 | 21.3 | 20.4 | 19.6 |
| | | 50+60+71 | 3.45 | 4.14 | 4.90 | - | - | - | 3.7 | 12.5 | 12.6 | 880 | 4650 | 4800 | 21.3 | 20.4 | 19.6 |
| | | 60+60+60 | 4.17 | 4.17 | 4.17 | - | - | - | 3.7 | 12.5 | 12.6 | 880 | 4650 | 4800 | 21.3 | 20.4 | 19.6 |
| | | 60+60+71 | 3.93 | 3.93 | 4.65 | - | - | - | 3.7 | 12.5 | 12.6 | 880 | 4650 | 4800 | 21.3 | 20.4 | 19.6 |
| | 4 room | 20+20+20+20 | 2.00 | 2.00 | 2.00 | 2.00 | - | - | 4.4 | 8.0 | 10.8 | 1100 | 2110 | 3680 | 9.6 | 9.2 | 8.8 |
| | | 20+20+20+25 | 2.00 | 2.00 | 2.00 | 2.50 | - | - | 4.4 | 8.5 | 11.3 | 1100 | 2390 | 3890 | 10.9 | 10.4 | 10.0 |
| | | 20+20+20+35 | 2.00 | 2.00 | 2.00 | 3.50 | - | - | 4.4 | 9.5 | 11.8 | 1100 | 2900 | 4350 | 13.2 | 12.6 | 12.1 |
| | | 20+20+20+50 | 2.00 | 2.00 | 2.00 | 5.00 | - | - | 4.4 | 11.0 | 12.8 | 1100 | 3580 | 4800 | 16.3 | 15.6 | 14.9 |
| | | 20+20+20+60 | 2.00 | 2.00 | 2.00 | 6.00 | - | - | 4.4 | 12.0 | 12.8 | 1100 | 4100 | 4800 | 18.7 | 17.8 | 17.1 |
| | | 20+20+20+71 | 1.91 | 1.91 | 1.91 | 6.77 | - | - | 4.4 | 12.5 | 12.8 | 1100 | 4730 | 4800 | 21.3 | 20.4 | 19.5 |
| | | 20+20+25+25 | 2.00 | 2.00 | 2.50 | 2.50 | - | - | 4.4 | 9.0 | 11.8 | 1100 | 2600 | 4410 | 11.8 | 11.3 | 10.8 |
| | | 20+20+25+35 | 2.00 | 2.00 | 2.50 | 3.50 | - | - | 4.4 | 10.0 | 12.3 | 1100 | 3210 | 4780 | 14.6 | 14.0 | 13.4 |
| | | 20+20+25+50 | 2.00 | 2.00 | 2.50 | 5.00 | - | - | 4.4 | 11.5 | 12.8 | 1100 | 3830 | 4800 | 17.4 | 16.7 | 16.0 |
| | | 20+20+25+60 | 2.00 | 2.00 | 2.50 | 6.00 | - | - | 4.4 | 12.5 | 12.8 | 1100 | 4740 | 4800 | 21.6 | 20.6 | 19.8 |
| | | 20+20+25+71 | 1.84 | 1.84 | 2.30 | 6.53 | - | - | 4.4 | 12.5 | 12.8 | 1100 | 4730 | 4800 | 21.5 | 20.6 | 19.7 |
| | | 20+20+35+35 | 2.00 | 2.00 | 3.50 | 3.50 | - | - | 4.4 | 11.0 | 12.8 | 1100 | 3580 | 4800 | 16.3 | 15.6 | 14.9 |
| | | 20+20+35+50 | 2.00 | 2.00 | 3.50 | 5.00 | - | - | 4.4 | 12.5 | 12.8 | 1100 | 4740 | 4800 | 21.6 | 20.6 | 19.8 |
| | | 20+20+35+60 | 1.85 | 1.85 | 3.24 | 5.56 | - | - | 4.4 | 12.5 | 12.8 | 1100 | 4730 | 4800 | 21.5 | 20.6 | 19.7 |
| | | 20+20+35+71 | 1.71 | 1.71 | 3.00 | 6.08 | - | - | 4.4 | 12.5 | 12.8 | 1100 | 4730 | 4800 | 21.5 | 20.6 | 19.7 |
| | | 20+20+50+50 | 1.79 | 1.79 | 4.46 | 4.46 | - | - | 4.4 | 12.5 | 12.8 | 1100 | 4730 | 4800 | 21.5 | 20.6 | 19.7 |
| | | 20+20+50+60 | 1.67 | 1.67 | 4.17 | 5.00 | - | - | 4.4 | 12.5 | 12.8 | 1100 | 4730 | 4800 | 21.5 | 20.6 | 19.7 |
| | | 20+20+50+71 | 1.55 | 1.55 | 3.88 | 5.51 | - | - | 4.4 | 12.5 | 12.8 | 1100 | 4720 | 4800 | 21.5 | 20.5 | 19.7 |
| | | 20+20+60+60 | 1.56 | 1.56 | 4.69 | 4.69 | - | - | 4.4 | 12.5 | 12.8 | 1100 | 4720 | 4800 | 21.5 | 20.5 | 19.7 |
| | | 20+20+60+71 | 1.46 | 1.46 | 4.39 | 5.19 | - | - | 4.4 | 12.5 | 12.8 | 1100 | 4720 | 4800 | 21.5 | 20.5 | 19.7 |
| | | 20+20+71+71 | 1.37 | 1.37 | 4.88 | 4.88 | | | 4.4 | 12.5 | 12.8 | 1100 | 4710 | 4800 | 21.4 | 20.5 | 19.6 |
| | | 20+25+25+25 | 2.00 | 2.50 | 2.50 | 2.50 | - | - | 4.4 | 9.5 | 12.8 | 1100 | 2900 | 4800 | 13.2 | 12.6 | 12.1 |
| | | 20+25+25+35 | 2.00 | 2.50 | 2.50 | 3.50 | - | - | 4.4 | 10.5 | 12.8 | 1100 | 3440 | 4800 | 15.7 | 15.0 | 14.3 |
| | | 20+25+25+50 | 2.00 | 2.50 | 2.50 | 5.00 | - | - | 4.4 | 12.0 | 12.8 | 1100 | 4100 | 4800 | 18.7 | 17.8 | 17.1 |
| | | 20+25+25+60 | 1.92 | 2.40 | 2.40 | 5.77 | - | - | 4.4 | 12.5 | 12.8 | 1100 | 4740 | 4800 | 21.6 | 20.6 | 19.8 |
| | | 20+25+25+71 | 1.82 | 2.26 | 2.26 | 6.16 | - | - | 4.4 | 12.5 | 12.8 | 1100 | 4730 | 4800 | 21.5 | 20.6 | 19.7 |
| | | 20+25+35+35 | 2.00 | 2.50 | 3.50 | 3.50 | - | - | 4.4 | 11.5 | 12.8 | 1100 | 3830 | 4800 | 17.4 | 16.7 | 16.0 |
| | | 20+25+35+50 | 1.92 | 2.40 | 3.37 | 4.81 | - | - | 4.4 | 12.5 | 12.8 | 1100 | 4740 | 4800 | 21.6 | 20.6 | 19.8 |
| | | 20+25+35+60 | 1.79 | 2.23 | 3.13 | 5.36 | - | - | 4.4 | 12.5 | 12.8 | 1100 | 4730 | 4800 | 21.5 | 20.6 | 19.7 |
| | | 20+25+35+71 | 1.66 | 2.07 | 2.90 | 5.88 | | | 4.4 | 12.5 | 12.8 | 1100 | 4730 | 4800 | 21.5 | 20.6 | 19.7 |
| | | 20+25+50+50 | 1.72 | 2.16 | 4.31 | 4.31 | - | - | 4.4 | 12.5 | 12.8 | 1100 | 4730 | 4800 | 21.5 | 20.6 | 19.7 |
| | | 20+25+50+60 | 1.61 | 2.02 | 4.03 | 4.84 | - | - | 4.4 | 12.5 | 12.8 | 1100 | 4720 | 4800 | 21.5 | 20.5 | 19.7 |
| | | 20+25+50+71 | 1.51 | 1.88 | 3.77 | 5.35 | | | 4.4 | 12.5 | 12.8 | 1100 | 4720 | 4800 | 21.5 | 20.5 | 19.7 |
| | | 20+25+60+60 | 1.52 | 1.89 | 4.55 | 4.55 | - | - | 4.4 | 12.5 | 12.8 | 1100 | 4720 | 4800 | 21.5 | 20.5 | 19.7 |
| | | 20+25+60+71 | 1.42 | 1.78 | 4.26 | 5.04 | | | 4.4 | 12.5 | 12.8 | 1100 | 4720 | 4800 | 21.5 | 20.5 | 19.7 |
| | | 20+25+71+71 | 1.34 | 1.67 | 4.75 | 4.75 | | | 4.4 | 12.5 | 12.8 | 1100 | 4700 | 4800 | 21.4 | 20.5 | 19.6 |
| | | 20+35+35+35 | 2.00 | 3.50 | 3.50 | 3.50 | - | - | 4.4 | 12.5 | 12.8 | 1100 | 4740 | 4800 | 21.6 | 20.6 | 19.8 |
| | | 20+35+35+50 | 1.79 | 3.13 | 3.13 | 4.46 | - | - | 4.4 | 12.5 | 12.8 | 1100 | 4730 | 4800 | 21.5 | 20.6 | 19.7 |
| | | 20+35+35+60 | 1.67 | 2.92 | 2.92 | 5.00 | - | - | 4.4 | 12.5 | 12.8 | 1100 | 4730 | 4800 | 21.5 | 20.6 | 19.7 |
| | | 20+35+35+71 | 1.55 | 2.72 | 2.72 | 5.51 | | | 4.4 | 12.5 | 12.8 | 1100 | 4720 | 4800 | 21.5 | 20.5 | 19.7 |

| Indoor unit combination | | | Cooling capacity (kW) | | | | | | | | | Power consumption(W) | | | Standard current(A) | | |
|---|---|---|---|---|---|---|---|---|---|---|---|---|---|---|---|---|---|
| | | | Room cooling capacity | | | | | | Total capacity | | | | | | | | |
| | | | A | B | C | D | E | F | Min. | Standard | Max. | Min. | Standard | Max. | 220V | 230V | 240V |
| Cooling operation | 4 room | 20+35+50+50 | 1.61 | 2.82 | 4.03 | 4.03 | - | - | 4.4 | 12.5 | 12.8 | 1100 | 4720 | 4800 | 21.5 | 20.5 | 19.7 |
| | | 20+35+50+60 | 1.52 | 2.65 | 3.79 | 4.55 | - | - | 4.4 | 12.5 | 12.8 | 1100 | 4720 | 4800 | 21.5 | 20.5 | 19.7 |
| | | 20+35+50+71 | 1.42 | 2.49 | 3.55 | 5.04 | | | 4.4 | 12.5 | 12.8 | 1100 | 4720 | 4800 | 21.5 | 20.5 | 19.7 |
| | | 20+35+60+60 | 1.43 | 2.50 | 4.29 | 4.29 | | | 4.4 | 12.5 | 12.8 | 1100 | 4710 | 4800 | 21.4 | 20.5 | 19.6 |
| | | 20+35+60+71 | 1.34 | 2.35 | 4.03 | 4.77 | | | 4.4 | 12.5 | 12.8 | 1100 | 4710 | 4800 | 21.4 | 20.5 | 19.6 |
| | | 20+50+50+50 | 1.47 | 3.68 | 3.68 | 3.68 | - | - | 4.4 | 12.5 | 12.8 | 1100 | 4720 | 4800 | 21.5 | 20.5 | 19.7 |
| | | 20+50+50+60 | 1.39 | 3.47 | 3.47 | 4.17 | - | - | 4.4 | 12.5 | 12.8 | 1100 | 4710 | 4800 | 21.4 | 20.5 | 19.6 |
| | | 20+50+50+71 | 1.31 | 3.27 | 3.27 | 4.65 | | | 4.4 | 12.5 | 12.8 | 1100 | 4700 | 4800 | 21.4 | 20.5 | 19.6 |
| | | 20+50+60+60 | 1.32 | 3.29 | 3.95 | 3.95 | - | - | 4.4 | 12.5 | 12.8 | 1100 | 4700 | 4800 | 21.4 | 20.5 | 19.6 |
| | | 25+25+25+25 | 2.50 | 2.50 | 2.50 | 2.50 | - | - | 4.4 | 10.0 | 12.8 | 1100 | 3210 | 4800 | 14.6 | 14.0 | 13.4 |
| | | 25+25+25+35 | 2.50 | 2.50 | 2.50 | 3.50 | - | - | 4.4 | 11.0 | 12.8 | 1100 | 3580 | 4800 | 16.3 | 15.6 | 14.9 |
| | | 25+25+25+50 | 2.50 | 2.50 | 2.50 | 5.00 | - | - | 4.4 | 12.5 | 12.8 | 1100 | 4740 | 4800 | 21.6 | 20.6 | 19.8 |
| | | 25+25+25+60 | 2.31 | 2.31 | 2.31 | 5.56 | - | - | 4.4 | 12.5 | 12.8 | 1100 | 4730 | 4800 | 21.5 | 20.6 | 19.7 |
| | | 25+25+25+71 | 2.14 | 2.14 | 2.14 | 6.08 | | | 4.4 | 12.5 | 12.8 | 1100 | 4730 | 4800 | 21.5 | 20.6 | 19.7 |
| | | 25+25+35+35 | 2.50 | 2.50 | 3.50 | 3.50 | - | - | 4.4 | 12.0 | 12.8 | 1100 | 4100 | 4800 | 18.7 | 17.8 | 17.1 |
| | | 25+25+35+50 | 2.31 | 2.31 | 3.24 | 4.63 | - | - | 4.4 | 12.5 | 12.8 | 1100 | 4730 | 4800 | 21.5 | 20.6 | 19.7 |
| | | 25+25+35+60 | 2.16 | 2.16 | 3.02 | 5.17 | | | 4.4 | 12.5 | 12.8 | 1100 | 4730 | 4800 | 21.5 | 20.6 | 19.7 |
| | | 25+25+35+71 | 2.00 | 2.00 | 2.80 | 5.69 | | | 4.4 | 12.5 | 12.8 | 1100 | 4720 | 4800 | 21.5 | 20.5 | 19.7 |
| | | 25+25+50+50 | 2.08 | 2.08 | 4.17 | 4.17 | - | - | 4.4 | 12.5 | 12.8 | 1100 | 4730 | 4800 | 21.5 | 20.6 | 19.7 |
| | | 25+25+50+60 | 1.95 | 1.95 | 3.91 | 4.69 | - | - | 4.4 | 12.5 | 12.8 | 1100 | 4720 | 4800 | 21.5 | 20.5 | 19.7 |
| | | 25+25+50+71 | 1.83 | 1.83 | 3.65 | 5.19 | - | - | 4.4 | 12.5 | 12.8 | 1100 | 4720 | 4800 | 21.5 | 20.5 | 19.7 |
| | | 25+25+60+60 | 1.84 | 1.84 | 4.41 | 4.41 | - | - | 4.4 | 12.5 | 12.8 | 1100 | 4720 | 4800 | 21.5 | 20.5 | 19.7 |
| | | 25+25+60+71 | 1.73 | 1.73 | 4.14 | 4.90 | - | - | 4.4 | 12.5 | 12.8 | 1100 | 4710 | 4800 | 21.4 | 20.5 | 19.6 |
| | | 25+25+71+71 | 1.63 | 1.63 | 4.62 | 4.62 | - | - | 4.4 | 12.5 | 12.8 | 1100 | 4700 | 4800 | 21.4 | 20.5 | 19.6 |
| | | 25+35+35+35 | 2.40 | 3.37 | 3.37 | 3.37 | - | - | 4.4 | 12.5 | 12.8 | 1100 | 4740 | 4800 | 21.6 | 20.6 | 19.8 |
| | | 25+35+35+50 | 2.16 | 3.02 | 3.02 | 4.31 | - | - | 4.4 | 12.5 | 12.8 | 1100 | 4730 | 4800 | 21.5 | 20.6 | 19.7 |
| | | 25+35+35+60 | 2.02 | 2.82 | 2.82 | 4.84 | - | - | 4.4 | 12.5 | 12.8 | 1100 | 4720 | 4800 | 21.5 | 20.5 | 19.7 |
| | | 25+35+35+71 | 1.88 | 2.64 | 2.64 | 5.35 | | | 4.4 | 12.5 | 12.8 | 1100 | 4720 | 4800 | 21.5 | 20.5 | 19.7 |
| | | 25+35+50+50 | 1.95 | 2.73 | 3.91 | 3.91 | - | - | 4.4 | 12.5 | 12.8 | 1100 | 4720 | 4800 | 21.5 | 20.5 | 19.7 |
| | | 25+35+50+60 | 1.84 | 2.57 | 3.68 | 4.41 | - | - | 4.4 | 12.5 | 12.8 | 1100 | 4720 | 4800 | 21.5 | 20.5 | 19.7 |
| | | 25+35+50+71 | 1.73 | 2.42 | 3.45 | 4.90 | | | 4.4 | 12.5 | 12.8 | 1100 | 4710 | 4800 | 21.4 | 20.5 | 19.6 |
| | | 25+35+60+60 | 1.74 | 2.43 | 4.17 | 4.17 | - | - | 4.4 | 12.5 | 12.8 | 1100 | 4710 | 4800 | 21.4 | 20.5 | 19.6 |
| | | 25+35+60+71 | 1.64 | 2.29 | 3.93 | 4.65 | - | - | 4.4 | 12.5 | 12.8 | 1100 | 4700 | 4800 | 21.4 | 20.5 | 19.6 |
| | | 25+50+50+50 | 1.79 | 3.57 | 3.57 | 3.57 | - | - | 4.4 | 12.5 | 12.8 | 1100 | 4710 | 4800 | 21.4 | 20.5 | 19.6 |
| | | 25+50+50+60 | 1.69 | 3.38 | 3.38 | 4.05 | - | - | 4.4 | 12.5 | 12.8 | 1100 | 4710 | 4800 | 21.4 | 20.5 | 19.6 |
| | | 25+50+60+60 | 1.60 | 3.21 | 3.85 | 3.85 | - | - | 4.4 | 12.5 | 12.8 | 1100 | 4700 | 4800 | 21.4 | 20.5 | 19.6 |
| | | 35+35+35+35 | 3.13 | 3.13 | 3.13 | 3.13 | - | - | 4.4 | 12.5 | 12.8 | 1100 | 4730 | 4800 | 21.5 | 20.6 | 19.7 |
| | | 35+35+35+50 | 2.82 | 2.82 | 2.82 | 4.03 | - | - | 4.4 | 12.5 | 12.8 | 1100 | 4720 | 4800 | 21.5 | 20.5 | 19.7 |
| | | 35+35+35+60 | 2.65 | 2.65 | 2.65 | 4.55 | - | - | 4.4 | 12.5 | 12.8 | 1100 | 4720 | 4800 | 21.5 | 20.5 | 19.7 |
| | | 35+35+35+71 | 2.49 | 2.49 | 2.49 | 5.04 | - | - | 4.4 | 12.5 | 12.8 | 1100 | 4710 | 4800 | 21.4 | 20.5 | 19.6 |
| | | 35+35+50+50 | 2.57 | 2.57 | 3.68 | 3.68 | - | - | 4.4 | 12.5 | 12.8 | 1100 | 4720 | 4800 | 21.5 | 20.5 | 19.7 |
| | | 35+35+50+60 | 2.43 | 2.43 | 3.47 | 4.17 | - | - | 4.4 | 12.5 | 12.8 | 1100 | 4710 | 4800 | 21.4 | 20.5 | 19.6 |
| | | 35+35+50+71 | 2.29 | 2.29 | 3.27 | 4.65 | - | - | 4.4 | 12.5 | 12.8 | 1100 | 4700 | 4800 | 21.4 | 20.5 | 19.6 |
| | | 35+35+60+60 | 2.30 | 2.30 | 3.95 | 3.95 | - | - | 4.4 | 12.5 | 12.8 | 1100 | 4700 | 4800 | 21.4 | 20.5 | 19.6 |
| | | 35+50+50+50 | 2.36 | 3.38 | 3.38 | 3.38 | - | - | 4.4 | 12.5 | 12.8 | 1100 | 4710 | 4800 | 21.4 | 20.5 | 19.6 |
| | | 35+50+50+60 | 2.24 | 3.21 | 3.21 | 3.85 | - | - | 4.4 | 12.5 | 12.8 | 1100 | 4700 | 4800 | 21.4 | 20.5 | 19.6 |
| | 5 room | 20+20+20+20+20 | 2.00 | 2.00 | 2.00 | 2.00 | 2.00 | - | 5.1 | 10.0 | 13.3 | 1210 | 2950 | 4800 | 13.4 | 12.8 | 12.3 |
| | | 20+20+20+20+25 | 2.00 | 2.00 | 2.00 | 2.00 | 2.50 | - | 5.1 | 10.5 | 13.3 | 1210 | 3200 | 4800 | 14.6 | 13.9 | 13.3 |
| | | 20+20+20+20+35 | 2.00 | 2.00 | 2.00 | 2.00 | 3.50 | - | 5.1 | 11.5 | 13.3 | 1210 | 3710 | 4800 | 16.9 | 16.1 | 15.5 |
| | | 20+20+20+20+50 | 1.92 | 1.92 | 1.92 | 1.92 | 4.81 | - | 5.1 | 12.5 | 13.3 | 1210 | 4430 | 4800 | 20.2 | 19.3 | 18.5 |
| | | 20+20+20+20+60 | 1.79 | 1.79 | 1.79 | 1.79 | 5.36 | - | 5.1 | 12.5 | 13.3 | 1210 | 4420 | 4800 | 20.1 | 19.2 | 18.4 |
| | | 20+20+20+20+71 | 1.66 | 1.66 | 1.66 | 1.66 | 5.88 | - | 5.1 | 12.5 | 13.3 | 1210 | 4410 | 4800 | 20.1 | 19.2 | 18.4 |
| | | 20+20+20+25+25 | 2.00 | 2.00 | 2.00 | 2.50 | 2.50 | - | 5.1 | 11.0 | 13.3 | 1210 | 3400 | 4800 | 15.5 | 14.8 | 14.2 |
| | | 20+20+20+25+35 | 2.00 | 2.00 | 2.00 | 2.50 | 3.50 | - | 5.1 | 12.0 | 13.3 | 1210 | 4090 | 4800 | 18.6 | 17.8 | 17.1 |
| | | 20+20+20+25+50 | 1.85 | 1.85 | 1.85 | 2.31 | 4.63 | - | 5.1 | 12.5 | 13.3 | 1210 | 4430 | 4800 | 20.2 | 19.3 | 18.5 |
| | | 20+20+20+25+60 | 1.72 | 1.72 | 1.72 | 2.16 | 5.17 | - | 5.1 | 12.5 | 13.3 | 1210 | 4420 | 4800 | 20.1 | 19.2 | 18.4 |
| | | 20+20+20+25+71 | 1.60 | 1.60 | 1.60 | 2.00 | 5.69 | - | 5.1 | 12.5 | 13.3 | 1210 | 4410 | 4800 | 20.1 | 19.2 | 18.4 |
| | | 20+20+20+35+35 | 1.92 | 1.92 | 1.92 | 3.37 | 3.37 | - | 5.1 | 12.5 | 13.3 | 1210 | 4430 | 4800 | 20.2 | 19.3 | 18.5 |
| | | 20+20+20+35+50 | 1.72 | 1.72 | 1.72 | 3.02 | 4.31 | - | 5.1 | 12.5 | 13.3 | 1210 | 4420 | 4800 | 20.1 | 19.2 | 18.4 |
| | | 20+20+20+35+60 | 1.61 | 1.61 | 1.61 | 2.82 | 4.84 | - | 5.1 | 12.5 | 13.3 | 1210 | 4410 | 4800 | 20.1 | 19.2 | 18.4 |
| | | 20+20+20+35+71 | 1.51 | 1.51 | 1.51 | 2.64 | 5.35 | - | 5.1 | 12.5 | 13.3 | 1210 | 4400 | 4800 | 20.0 | 19.1 | 18.4 |
| | | 20+20+20+50+50 | 1.56 | 1.56 | 1.56 | 3.91 | 3.91 | - | 5.1 | 12.5 | 13.3 | 1210 | 4410 | 4800 | 20.1 | 19.2 | 18.4 |
| | | 20+20+20+50+60 | 1.47 | 1.47 | 1.47 | 3.68 | 4.41 | - | 5.1 | 12.5 | 13.3 | 1210 | 4400 | 4800 | 20.0 | 19.1 | 18.4 |
| | | 20+20+20+50+71 | 1.38 | 1.38 | 1.38 | 3.45 | 4.90 | - | 5.1 | 12.5 | 13.3 | 1210 | 4390 | 4800 | 20.0 | 19.1 | 18.3 |
| | | 20+20+20+60+60 | 1.39 | 1.39 | 1.39 | 4.17 | 4.17 | - | 5.1 | 12.5 | 13.3 | 1210 | 4390 | 4800 | 20.0 | 19.1 | 18.3 |
| | | 20+20+20+60+71 | 1.31 | 1.31 | 1.31 | 3.93 | 4.65 | - | 5.1 | 12.5 | 13.3 | 1210 | 4380 | 4800 | 19.9 | 19.1 | 18.3 |
| | | 20+20+25+25+25 | 2.00 | 2.00 | 2.50 | 2.50 | 2.50 | - | 5.1 | 11.5 | 13.3 | 1210 | 3710 | 4800 | 16.9 | 16.1 | 15.5 |
| | | 20+20+25+25+35 | 2.00 | 2.00 | 2.50 | 2.50 | 3.50 | - | 5.1 | 12.5 | 13.3 | 1210 | 4440 | 4800 | 20.2 | 19.3 | 18.5 |
| | | 20+20+25+25+50 | 1.79 | 1.79 | 2.23 | 2.23 | 4.46 | - | 5.1 | 12.5 | 13.3 | 1210 | 4420 | 4800 | 20.1 | 19.2 | 18.4 |
| | | 20+20+25+25+60 | 1.67 | 1.67 | 2.08 | 2.08 | 5.00 | - | 5.1 | 12.5 | 13.3 | 1210 | 4410 | 4800 | 20.1 | 19.2 | 18.4 |
| | | 20+20+25+25+71 | 1.55 | 1.55 | 1.94 | 1.94 | 5.51 | - | 5.1 | 12.5 | 13.3 | 1210 | 4410 | 4800 | 20.1 | 19.2 | 18.4 |
| | | 20+20+25+35+35 | 1.85 | 1.85 | 2.31 | 3.24 | 3.24 | - | 5.1 | 12.5 | 13.3 | 1210 | 4430 | 4800 | 20.2 | 19.3 | 18.5 |
| | | 20+20+25+35+50 | 1.67 | 1.67 | 2.08 | 2.92 | 4.17 | - | 5.1 | 12.5 | 13.3 | 1210 | 4410 | 4800 | 20.1 | 19.2 | 18.4 |
| | | 20+20+25+35+60 | 1.56 | 1.56 | 1.95 | 2.73 | 4.69 | - | 5.1 | 12.5 | 13.3 | 1210 | 4410 | 4800 | 20.1 | 19.2 | 18.4 |
| | | 20+20+25+35+71 | 1.46 | 1.46 | 1.83 | 2.56 | 5.19 | - | 5.1 | 12.5 | 13.3 | 1210 | 4400 | 4800 | 20.0 | 19.1 | 18.4 |
| | | 20+20+25+50+50 | 1.52 | 1.52 | 1.89 | 3.79 | 3.79 | - | 5.1 | 12.5 | 13.3 | 1210 | 4400 | 4800 | 20.0 | 19.1 | 18.4 |
| | | 20+20+25+50+60 | 1.43 | 1.43 | 1.79 | 3.57 | 4.29 | - | 5.1 | 12.5 | 13.3 | 1210 | 4390 | 4800 | 20.0 | 19.1 | 18.3 |

R410A

# MULTI-SPLIT SYSTEM

| Indoor unit combination | | | Cooling capacity (kW) | | | | | | | | | Power consumption(W) | | | Standard current(A) | | |
|---|---|---|---|---|---|---|---|---|---|---|---|---|---|---|---|---|---|
| | | | Room cooling capacity | | | | | | Total capacity | | | Min. | Standard | Max. | 220V | 230V | 240V |
| | | | A | B | C | D | E | F | Min. | Standard | Max. | | | | | | |
| Cooling operation | 5 room | 20+20+25+50+71 | 1.34 | 1.34 | 1.68 | 3.36 | 4.77 | - | 5.1 | 12.5 | 13.3 | 1210 | 4390 | 4800 | 20.0 | 19.1 | 18.3 |
| | | 20+20+25+60+60 | 1.35 | 1.35 | 1.69 | 4.05 | 4.05 | - | 5.1 | 12.5 | 13.3 | 1210 | 4390 | 4800 | 20.0 | 19.1 | 18.3 |
| | | 20+20+35+35+35 | 1.72 | 1.72 | 3.02 | 3.02 | 3.02 | - | 5.1 | 12.5 | 13.3 | 1210 | 4420 | 4800 | 20.1 | 19.2 | 18.4 |
| | | 20+20+35+35+50 | 1.56 | 1.56 | 2.73 | 2.73 | 3.91 | - | 5.1 | 12.5 | 13.3 | 1210 | 4410 | 4800 | 20.1 | 19.2 | 18.4 |
| | | 20+20+35+35+60 | 1.47 | 1.47 | 2.57 | 2.57 | 4.41 | - | 5.1 | 12.5 | 13.3 | 1210 | 4400 | 4800 | 20.0 | 19.1 | 18.4 |
| | | 20+20+35+35+71 | 1.38 | 1.38 | 2.42 | 2.42 | 4.90 | - | 5.1 | 12.5 | 13.3 | 1210 | 4390 | 4800 | 20.0 | 19.1 | 18.3 |
| | | 20+20+35+50+50 | 1.43 | 1.43 | 2.50 | 3.57 | 3.57 | - | 5.1 | 12.5 | 13.3 | 1210 | 4390 | 4800 | 20.0 | 19.1 | 18.3 |
| | | 20+20+35+50+60 | 1.35 | 1.35 | 2.36 | 3.38 | 4.05 | - | 5.1 | 12.5 | 13.3 | 1210 | 4390 | 4800 | 20.0 | 19.1 | 18.3 |
| | | 20+20+35+60+60 | 1.28 | 1.28 | 2.24 | 3.85 | 3.85 | - | 5.1 | 12.5 | 13.3 | 1210 | 4380 | 4800 | 19.9 | 19.1 | 18.3 |
| | | 20+20+50+50+50 | 1.32 | 1.32 | 3.29 | 3.29 | 3.29 | - | 5.1 | 12.5 | 13.3 | 1210 | 4380 | 4800 | 19.9 | 19.1 | 18.3 |
| | | 20+25+25+25+25 | 2.00 | 2.50 | 2.50 | 2.50 | 2.50 | - | 5.1 | 12.0 | 13.3 | 1210 | 4090 | 4800 | 18.6 | 17.8 | 17.1 |
| | | 20+25+25+25+35 | 1.92 | 2.40 | 2.40 | 2.40 | 3.37 | - | 5.1 | 12.5 | 13.3 | 1210 | 4430 | 4800 | 20.2 | 19.3 | 18.5 |
| | | 20+25+25+25+50 | 1.72 | 2.16 | 2.16 | 2.16 | 4.31 | - | 5.1 | 12.5 | 13.3 | 1210 | 4420 | 4800 | 20.1 | 19.2 | 18.4 |
| | | 20+25+25+25+60 | 1.61 | 2.02 | 2.02 | 2.02 | 4.84 | - | 5.1 | 12.5 | 13.3 | 1210 | 4410 | 4800 | 20.1 | 19.2 | 18.4 |
| | | 20+25+25+25+71 | 1.51 | 1.88 | 1.88 | 1.88 | 5.35 | - | 5.1 | 12.5 | 13.3 | 1210 | 4400 | 4800 | 20.0 | 19.1 | 18.4 |
| | | 20+25+25+35+35 | 1.79 | 2.23 | 2.23 | 3.13 | 3.13 | - | 5.1 | 12.5 | 13.3 | 1210 | 4420 | 4800 | 20.1 | 19.2 | 18.4 |
| | | 20+25+25+35+50 | 1.61 | 2.02 | 2.02 | 2.82 | 4.03 | - | 5.1 | 12.5 | 13.3 | 1210 | 4410 | 4800 | 20.1 | 19.2 | 18.4 |
| | | 20+25+25+35+60 | 1.52 | 1.89 | 1.89 | 2.65 | 4.55 | - | 5.1 | 12.5 | 13.3 | 1210 | 4400 | 4800 | 20.0 | 19.1 | 18.4 |
| | | 20+25+25+35+71 | 1.42 | 1.78 | 1.78 | 2.49 | 5.04 | - | 5.1 | 12.5 | 13.3 | 1210 | 4390 | 4800 | 20.0 | 19.1 | 18.3 |
| | | 20+25+25+50+50 | 1.47 | 1.84 | 1.84 | 3.68 | 3.68 | - | 5.1 | 12.5 | 13.3 | 1210 | 4400 | 4800 | 20.0 | 19.1 | 18.4 |
| | | 20+25+25+50+60 | 1.39 | 1.74 | 1.74 | 3.47 | 4.17 | - | 5.1 | 12.5 | 13.3 | 1210 | 4390 | 4800 | 20.0 | 19.1 | 18.3 |
| | | 20+25+25+50+71 | 1.31 | 1.64 | 1.64 | 3.27 | 4.65 | - | 5.1 | 12.5 | 13.3 | 1210 | 4380 | 4800 | 19.9 | 19.1 | 18.3 |
| | | 20+25+25+60+60 | 1.32 | 1.64 | 1.64 | 3.95 | 3.95 | - | 5.1 | 12.5 | 13.3 | 1210 | 4380 | 4800 | 19.9 | 19.1 | 18.3 |
| | | 20+25+35+35+35 | 1.67 | 2.08 | 2.92 | 2.92 | 2.92 | - | 5.1 | 12.5 | 13.3 | 1210 | 4410 | 4800 | 20.1 | 19.2 | 18.4 |
| | | 20+25+35+35+50 | 1.52 | 1.89 | 2.65 | 2.65 | 3.79 | - | 5.1 | 12.5 | 13.3 | 1210 | 4400 | 4800 | 20.0 | 19.1 | 18.4 |
| | | 20+25+35+35+60 | 1.43 | 1.79 | 2.50 | 2.50 | 4.29 | - | 5.1 | 12.5 | 13.3 | 1210 | 4390 | 4800 | 20.0 | 19.1 | 18.3 |
| | | 20+25+35+35+71 | 1.34 | 1.68 | 2.35 | 2.35 | 4.77 | - | 5.1 | 12.5 | 13.3 | 1210 | 4390 | 4800 | 20.0 | 19.1 | 18.3 |
| | | 20+25+35+50+50 | 1.39 | 1.74 | 2.43 | 3.47 | 3.47 | - | 5.1 | 12.5 | 13.3 | 1210 | 4390 | 4800 | 20.0 | 19.1 | 18.3 |
| | | 20+25+35+50+60 | 1.32 | 1.64 | 2.30 | 3.29 | 3.95 | - | 5.1 | 12.5 | 13.3 | 1210 | 4380 | 4800 | 19.9 | 19.1 | 18.3 |
| | | 20+25+50+50+50 | 1.28 | 1.60 | 3.21 | 3.21 | 3.21 | - | 5.1 | 12.5 | 13.3 | 1210 | 4380 | 4800 | 19.9 | 19.1 | 18.3 |
| | | 20+35+35+35+35 | 1.56 | 2.73 | 2.73 | 2.73 | 2.73 | - | 5.1 | 12.5 | 13.3 | 1210 | 4410 | 4800 | 20.1 | 19.2 | 18.4 |
| | | 20+35+35+35+50 | 1.43 | 2.50 | 2.50 | 2.50 | 3.57 | - | 5.1 | 12.5 | 13.3 | 1210 | 4390 | 4800 | 20.0 | 19.1 | 18.3 |
| | | 20+35+35+35+60 | 1.35 | 2.36 | 2.36 | 2.36 | 4.05 | - | 5.1 | 12.5 | 13.3 | 1210 | 4390 | 4800 | 20.0 | 19.1 | 18.3 |
| | | 20+35+35+50+50 | 1.32 | 2.30 | 2.30 | 3.29 | 3.29 | - | 5.1 | 12.5 | 13.3 | 1210 | 4380 | 4800 | 19.9 | 19.1 | 18.3 |
| | | 25+25+25+25+25 | 2.50 | 2.50 | 2.50 | 2.50 | 2.50 | - | 5.1 | 12.5 | 13.3 | 1210 | 4440 | 4800 | 20.2 | 19.3 | 18.5 |
| | | 25+25+25+25+35 | 2.31 | 2.31 | 2.31 | 2.31 | 3.24 | - | 5.1 | 12.5 | 13.3 | 1210 | 4430 | 4800 | 20.2 | 19.3 | 18.5 |
| | | 25+25+25+25+50 | 2.08 | 2.08 | 2.08 | 2.08 | 4.17 | - | 5.1 | 12.5 | 13.3 | 1210 | 4410 | 4800 | 20.1 | 19.2 | 18.4 |
| | | 25+25+25+25+60 | 1.95 | 1.95 | 1.95 | 1.95 | 4.69 | - | 5.1 | 12.5 | 13.3 | 1210 | 4410 | 4800 | 20.1 | 19.2 | 18.4 |
| | | 25+25+25+35+35 | 2.16 | 2.16 | 2.16 | 3.02 | 3.02 | - | 5.1 | 12.5 | 13.3 | 1210 | 4420 | 4800 | 20.1 | 19.2 | 18.4 |
| | | 25+25+25+35+50 | 1.95 | 1.95 | 1.95 | 2.73 | 3.91 | - | 5.1 | 12.5 | 13.3 | 1210 | 4410 | 4800 | 20.1 | 19.2 | 18.4 |
| | | 25+25+25+35+60 | 1.84 | 1.84 | 1.84 | 2.57 | 4.41 | - | 5.1 | 12.5 | 13.3 | 1210 | 4400 | 4800 | 20.0 | 19.1 | 18.4 |
| | | 25+25+25+35+71 | 1.73 | 1.73 | 1.73 | 2.42 | 4.90 | - | 5.1 | 12.5 | 13.3 | 1210 | 4390 | 4800 | 20.0 | 19.1 | 18.3 |
| | | 25+25+25+50+50 | 1.79 | 1.79 | 1.79 | 3.57 | 3.57 | - | 5.1 | 12.5 | 13.3 | 1210 | 4390 | 4800 | 20.0 | 19.1 | 18.3 |
| | | 25+25+25+50+60 | 1.69 | 1.69 | 1.69 | 3.38 | 4.05 | - | 5.1 | 12.5 | 13.3 | 1210 | 4390 | 4800 | 20.0 | 19.1 | 18.3 |
| | | 25+25+25+60+60 | 1.60 | 1.60 | 1.60 | 3.85 | 3.85 | - | 5.1 | 12.5 | 13.3 | 1210 | 4380 | 4800 | 19.9 | 19.1 | 18.3 |
| | | 25+25+35+35+35 | 2.02 | 2.02 | 2.82 | 2.82 | 2.82 | - | 5.1 | 12.5 | 13.3 | 1210 | 4410 | 4800 | 20.1 | 19.2 | 18.4 |
| | | 25+25+35+35+50 | 1.84 | 1.84 | 2.57 | 2.57 | 3.68 | - | 5.1 | 12.5 | 13.3 | 1210 | 4400 | 4800 | 20.0 | 19.1 | 18.4 |
| | | 25+25+35+35+60 | 1.74 | 1.74 | 2.43 | 2.43 | 4.17 | - | 5.1 | 12.5 | 13.3 | 1210 | 4390 | 4800 | 20.0 | 19.1 | 18.3 |
| | | 25+25+35+35+71 | 1.64 | 1.64 | 2.29 | 2.29 | 4.65 | - | 5.1 | 12.5 | 13.3 | 1210 | 4380 | 4800 | 19.9 | 19.1 | 18.3 |
| | | 25+25+35+50+50 | 1.69 | 1.69 | 2.36 | 3.38 | 3.38 | - | 5.1 | 12.5 | 13.3 | 1210 | 4390 | 4800 | 20.0 | 19.1 | 18.3 |
| | | 25+25+35+50+60 | 1.60 | 1.60 | 2.24 | 3.21 | 3.85 | - | 5.1 | 12.5 | 13.3 | 1210 | 4380 | 4800 | 19.9 | 19.1 | 18.3 |
| | | 25+35+35+35+35 | 1.89 | 2.65 | 2.65 | 2.65 | 2.65 | - | 5.1 | 12.5 | 13.3 | 1210 | 4400 | 4800 | 20.0 | 19.1 | 18.4 |
| | | 25+35+35+35+50 | 1.74 | 2.43 | 2.43 | 2.43 | 3.47 | - | 5.1 | 12.5 | 13.3 | 1210 | 4390 | 4800 | 20.0 | 19.1 | 18.3 |
| | | 25+35+35+35+60 | 1.64 | 2.30 | 2.30 | 2.30 | 3.95 | - | 5.1 | 12.5 | 13.3 | 1210 | 4380 | 4800 | 19.9 | 19.1 | 18.3 |
| | | 25+35+35+50+50 | 1.60 | 2.24 | 2.24 | 3.21 | 3.21 | - | 5.1 | 12.5 | 13.3 | 1210 | 4380 | 4800 | 19.9 | 19.1 | 18.3 |
| | | 35+35+35+35+35 | 2.50 | 2.50 | 2.50 | 2.50 | 2.50 | - | 5.1 | 12.5 | 13.3 | 1210 | 4390 | 4800 | 20.0 | 19.1 | 18.3 |
| | | 35+35+35+35+50 | 2.30 | 2.30 | 2.30 | 2.30 | 3.29 | - | 5.1 | 12.5 | 13.3 | 1210 | 4380 | 4800 | 19.9 | 19.1 | 18.3 |
| | 6 room | 20+20+20+20+20+20 | 2.00 | 2.00 | 2.00 | 2.00 | 2.00 | 2.00 | 5.5 | 12.0 | 13.6 | 1280 | 3750 | 4620 | 17.1 | 16.3 | 15.6 |
| | | 20+20+20+20+20+25 | 2.00 | 2.00 | 2.00 | 2.00 | 2.00 | 2.50 | 5.5 | 12.5 | 13.3 | 1280 | 4010 | 4800 | 18.2 | 17.5 | 16.7 |
| | | 20+20+20+20+20+35 | 1.85 | 1.85 | 1.85 | 1.85 | 1.85 | 3.24 | 5.5 | 12.5 | 13.3 | 1280 | 4000 | 4800 | 18.2 | 17.4 | 16.7 |
| | | 20+20+20+20+20+50 | 1.67 | 1.67 | 1.67 | 1.67 | 1.67 | 4.17 | 5.5 | 12.5 | 13.3 | 1280 | 3990 | 4800 | 18.2 | 17.4 | 16.6 |
| | | 20+20+20+20+20+60 | 1.56 | 1.56 | 1.56 | 1.56 | 1.56 | 4.69 | 5.5 | 12.5 | 13.3 | 1280 | 3990 | 4800 | 18.2 | 17.4 | 16.6 |
| | | 20+20+20+20+20+71 | 1.46 | 1.46 | 1.46 | 1.46 | 1.46 | 5.19 | 5.5 | 12.5 | 13.8 | 1280 | 3980 | 4800 | 18.1 | 17.3 | 16.6 |
| | | 20+20+20+20+25+25 | 1.92 | 1.92 | 1.92 | 1.92 | 2.40 | 2.40 | 5.5 | 12.5 | 13.8 | 1280 | 4000 | 4800 | 18.2 | 17.4 | 16.7 |
| | | 20+20+20+20+25+35 | 1.79 | 1.79 | 1.79 | 1.79 | 2.23 | 3.13 | 5.5 | 12.5 | 13.8 | 1280 | 4000 | 4800 | 18.2 | 17.4 | 16.7 |
| | | 20+20+20+20+25+50 | 1.61 | 1.61 | 1.61 | 1.61 | 2.02 | 4.03 | 5.5 | 12.5 | 13.8 | 1280 | 3990 | 4800 | 18.2 | 17.4 | 16.6 |
| | | 20+20+20+20+25+60 | 1.52 | 1.52 | 1.52 | 1.52 | 1.89 | 4.55 | 5.5 | 12.5 | 13.8 | 1280 | 3990 | 4800 | 18.2 | 17.4 | 16.6 |
| | | 20+20+20+20+35+35 | 1.67 | 1.67 | 1.67 | 1.67 | 2.92 | 2.92 | 5.5 | 12.5 | 13.8 | 1280 | 3990 | 4800 | 18.2 | 17.4 | 16.6 |
| | | 20+20+20+20+35+50 | 1.52 | 1.52 | 1.52 | 1.52 | 2.65 | 3.79 | 5.5 | 12.5 | 13.8 | 1280 | 3990 | 4800 | 18.2 | 17.4 | 16.6 |
| | | 20+20+20+20+35+60 | 1.43 | 1.43 | 1.43 | 1.43 | 2.50 | 4.29 | 5.5 | 12.5 | 13.8 | 1280 | 3980 | 4800 | 18.1 | 17.3 | 16.6 |
| | | 20+20+20+20+35+71 | 1.34 | 1.34 | 1.34 | 1.34 | 2.35 | 4.77 | 5.5 | 12.5 | 13.8 | 1280 | 3980 | 4800 | 18.1 | 17.3 | 16.6 |
| | | 20+20+20+20+50+50 | 1.39 | 1.39 | 1.39 | 1.39 | 3.47 | 3.47 | 5.5 | 12.5 | 13.8 | 1280 | 3980 | 4800 | 18.1 | 17.3 | 16.6 |
| | | 20+20+20+20+50+60 | 1.32 | 1.32 | 1.32 | 1.32 | 3.29 | 3.95 | 5.5 | 12.5 | 13.8 | 1280 | 3970 | 4800 | 18.1 | 17.3 | 16.6 |
| | | 20+20+20+25+25+25 | 1.85 | 1.85 | 1.85 | 2.31 | 2.31 | 2.31 | 5.5 | 12.5 | 13.8 | 1280 | 4000 | 4800 | 18.2 | 17.4 | 16.7 |
| | | 20+20+20+25+25+35 | 1.72 | 1.72 | 1.72 | 2.16 | 2.16 | 3.02 | 5.5 | 12.5 | 13.8 | 1280 | 4000 | 4800 | 18.2 | 17.4 | 16.7 |
| | | 20+20+20+25+25+50 | 1.56 | 1.56 | 1.56 | 1.95 | 1.95 | 3.91 | 5.5 | 12.5 | 13.8 | 1280 | 3990 | 4800 | 18.2 | 17.4 | 16.6 |
| | | 20+20+20+25+25+60 | 1.47 | 1.47 | 1.47 | 1.84 | 1.84 | 4.41 | 5.5 | 12.5 | 13.8 | 1280 | 3980 | 4800 | 18.1 | 17.3 | 16.6 |

| Indoor unit combination | | | Cooling capacity (kW) | | | | | | | | | Power consumption(W) | | | Standard current(A) | | |
|---|---|---|---|---|---|---|---|---|---|---|---|---|---|---|---|---|---|
| | | | Room cooling capacity | | | | | | Total capacity | | | | | | | | |
| | | | A | B | C | D | E | F | Min. | Standard | Max. | Min. | Standard | Max. | 220V | 230V | 240V |
| Cooling operation | 6 room | 20+20+20+25+25+71 | 1.38 | 1.38 | 1.38 | 1.73 | 1.73 | 4.90 | 5.5 | 12.5 | 13.8 | 1280 | 3980 | 4800 | 18.1 | 17.3 | 16.6 |
| | | 20+20+20+25+35+35 | 1.61 | 1.61 | 1.61 | 2.02 | 2.82 | 2.82 | 5.5 | 12.5 | 13.8 | 1280 | 3990 | 4800 | 18.2 | 17.4 | 16.6 |
| | | 20+20+20+25+35+50 | 1.47 | 1.47 | 1.47 | 1.84 | 2.57 | 3.68 | 5.5 | 12.5 | 13.8 | 1280 | 3980 | 4800 | 18.1 | 17.3 | 16.6 |
| | | 20+20+20+25+35+60 | 1.39 | 1.39 | 1.39 | 1.74 | 2.43 | 4.17 | 5.5 | 12.5 | 13.8 | 1280 | 3980 | 4800 | 18.1 | 17.3 | 16.6 |
| | | 20+20+20+25+35+71 | 1.31 | 1.31 | 1.31 | 1.64 | 2.29 | 4.65 | 5.5 | 12.5 | 13.8 | 1280 | 3970 | 4800 | 18.1 | 17.3 | 16.6 |
| | | 20+20+20+25+50+50 | 1.35 | 1.35 | 1.35 | 1.69 | 3.38 | 3.38 | 5.5 | 12.5 | 13.8 | 1280 | 3980 | 4800 | 18.1 | 17.3 | 16.6 |
| | | 20+20+20+25+50+60 | 1.28 | 1.28 | 1.28 | 1.60 | 3.21 | 3.85 | 5.5 | 12.5 | 13.8 | 1280 | 3970 | 4800 | 18.1 | 17.3 | 16.6 |
| | | 20+20+20+35+35+35 | 1.52 | 1.52 | 1.52 | 2.65 | 2.65 | 2.65 | 5.5 | 12.5 | 13.8 | 1280 | 3990 | 4800 | 18.2 | 17.4 | 16.6 |
| | | 20+20+20+35+35+50 | 1.39 | 1.39 | 1.39 | 2.43 | 2.43 | 3.47 | 5.5 | 12.5 | 13.8 | 1280 | 3980 | 4800 | 18.1 | 17.3 | 16.6 |
| | | 20+20+20+35+35+60 | 1.32 | 1.32 | 1.32 | 2.30 | 2.30 | 3.95 | 5.5 | 12.5 | 13.8 | 1280 | 3970 | 4800 | 18.1 | 17.3 | 16.6 |
| | | 20+20+20+35+50+50 | 1.28 | 1.28 | 1.28 | 2.24 | 3.21 | 3.21 | 5.5 | 12.5 | 13.8 | 1280 | 3970 | 4800 | 18.1 | 17.3 | 16.6 |
| | | 20+20+25+25+25+25 | 1.79 | 1.79 | 2.23 | 2.23 | 2.23 | 2.23 | 5.5 | 12.5 | 13.8 | 1280 | 4000 | 4800 | 18.2 | 17.4 | 16.7 |
| | | 20+20+25+25+25+35 | 1.67 | 1.67 | 2.08 | 2.08 | 2.08 | 2.92 | 5.5 | 12.5 | 13.8 | 1280 | 3990 | 4800 | 18.2 | 17.4 | 16.6 |
| | | 20+20+25+25+25+50 | 1.52 | 1.52 | 1.89 | 1.89 | 1.89 | 3.79 | 5.5 | 12.5 | 13.8 | 1280 | 3990 | 4800 | 18.2 | 17.4 | 16.6 |
| | | 20+20+25+25+25+60 | 1.43 | 1.43 | 1.79 | 1.79 | 1.79 | 4.29 | 5.5 | 12.5 | 13.8 | 1280 | 3980 | 4800 | 18.1 | 17.3 | 16.6 |
| | | 20+20+25+25+25+71 | 1.34 | 1.34 | 1.68 | 1.68 | 1.68 | 4.77 | 5.5 | 12.5 | 13.8 | 1280 | 3980 | 4800 | 18.1 | 17.3 | 16.6 |
| | | 20+20+25+25+35+35 | 1.56 | 1.56 | 1.95 | 1.95 | 2.73 | 2.73 | 5.5 | 12.5 | 13.8 | 1280 | 3990 | 4800 | 18.2 | 17.4 | 16.6 |
| | | 20+20+25+25+35+50 | 1.43 | 1.43 | 1.79 | 1.79 | 2.50 | 3.57 | 5.5 | 12.5 | 13.8 | 1280 | 3980 | 4800 | 18.1 | 17.3 | 16.6 |
| | | 20+20+25+25+35+60 | 1.35 | 1.35 | 1.69 | 1.69 | 2.36 | 4.05 | 5.5 | 12.5 | 13.8 | 1280 | 3980 | 4800 | 18.1 | 17.3 | 16.6 |
| | | 20+20+25+25+50+50 | 1.32 | 1.32 | 1.64 | 1.64 | 3.29 | 3.29 | 5.5 | 12.5 | 13.8 | 1280 | 3970 | 4800 | 18.1 | 17.3 | 16.6 |
| | | 20+20+25+35+35+35 | 1.47 | 1.47 | 1.84 | 2.57 | 2.57 | 2.57 | 5.5 | 12.5 | 13.8 | 1280 | 3980 | 4800 | 18.1 | 17.3 | 16.6 |
| | | 20+20+25+35+35+50 | 1.35 | 1.35 | 1.69 | 2.36 | 2.36 | 3.38 | 5.5 | 12.5 | 13.8 | 1280 | 3980 | 4800 | 18.1 | 17.3 | 16.6 |
| | | 20+20+25+35+35+60 | 1.28 | 1.28 | 1.60 | 2.24 | 2.24 | 3.85 | 5.5 | 12.5 | 13.8 | 1280 | 3970 | 4800 | 18.1 | 17.3 | 16.6 |
| | | 20+20+35+35+35+35 | 1.39 | 1.39 | 2.43 | 2.43 | 2.43 | 2.43 | 5.5 | 12.5 | 13.8 | 1280 | 3980 | 4800 | 18.1 | 17.3 | 16.6 |
| | | 20+20+35+35+35+50 | 1.28 | 1.28 | 2.24 | 2.24 | 2.24 | 3.21 | 5.5 | 12.5 | 13.8 | 1280 | 3970 | 4800 | 18.1 | 17.3 | 16.6 |
| | | 20+25+25+25+25+25 | 1.72 | 2.16 | 2.16 | 2.16 | 2.16 | 2.16 | 5.5 | 12.5 | 13.8 | 1280 | 4000 | 4800 | 18.2 | 17.4 | 16.7 |
| | | 20+25+25+25+25+35 | 1.61 | 2.02 | 2.02 | 2.02 | 2.02 | 2.82 | 5.5 | 12.5 | 13.8 | 1280 | 3990 | 4800 | 18.2 | 17.4 | 16.6 |
| | | 20+25+25+25+25+50 | 1.47 | 1.84 | 1.84 | 1.84 | 1.84 | 3.68 | 5.5 | 12.5 | 13.8 | 1280 | 3980 | 4800 | 18.1 | 17.3 | 16.6 |
| | | 20+25+25+25+25+60 | 1.39 | 1.74 | 1.74 | 1.74 | 1.74 | 4.17 | 5.5 | 12.5 | 13.8 | 1280 | 3980 | 4800 | 18.1 | 17.3 | 16.6 |
| | | 20+25+25+25+25+71 | 1.31 | 1.64 | 1.64 | 1.64 | 1.64 | 4.65 | 5.5 | 12.5 | 13.8 | 1280 | 3970 | 4800 | 18.1 | 17.3 | 16.6 |
| | | 20+25+25+25+35+35 | 1.52 | 1.89 | 1.89 | 1.89 | 2.65 | 2.65 | 5.5 | 12.5 | 13.8 | 1280 | 3990 | 4800 | 18.2 | 17.4 | 16.6 |
| | | 20+25+25+25+35+50 | 1.39 | 1.74 | 1.74 | 1.74 | 2.43 | 3.47 | 5.5 | 12.5 | 13.8 | 1280 | 3980 | 4800 | 18.1 | 17.3 | 16.6 |
| | | 20+25+25+25+35+60 | 1.32 | 1.64 | 1.64 | 1.64 | 2.30 | 3.95 | 5.5 | 12.5 | 13.8 | 1280 | 3970 | 4800 | 18.1 | 17.3 | 16.6 |
| | | 20+25+25+25+50+50 | 1.28 | 1.60 | 1.60 | 1.60 | 3.21 | 3.21 | 5.5 | 12.5 | 13.8 | 1280 | 3970 | 4800 | 18.1 | 17.3 | 16.6 |
| | | 20+25+25+35+35+35 | 1.43 | 1.79 | 1.79 | 2.50 | 2.50 | 2.50 | 5.5 | 12.5 | 13.8 | 1280 | 3980 | 4800 | 18.1 | 17.3 | 16.6 |
| | | 20+25+25+35+35+50 | 1.32 | 1.64 | 1.64 | 2.30 | 2.30 | 3.29 | 5.5 | 12.5 | 13.8 | 1280 | 3970 | 4800 | 18.1 | 17.3 | 16.6 |
| | | 20+25+35+35+35+35 | 1.35 | 1.69 | 2.36 | 2.36 | 2.36 | 2.36 | 5.5 | 12.5 | 13.8 | 1280 | 3980 | 4800 | 18.1 | 17.3 | 16.6 |
| | | 20+35+35+35+35+35 | 1.28 | 2.24 | 2.24 | 2.24 | 2.24 | 2.24 | 5.5 | 12.5 | 13.8 | 1280 | 3970 | 4800 | 18.1 | 17.3 | 16.6 |
| | | 25+25+25+25+25+25 | 2.08 | 2.08 | 2.08 | 2.08 | 2.08 | 2.08 | 5.5 | 12.5 | 13.8 | 1280 | 3990 | 4800 | 18.2 | 17.4 | 16.6 |
| | | 25+25+25+25+25+35 | 1.95 | 1.95 | 1.95 | 1.95 | 1.95 | 2.73 | 5.5 | 12.5 | 13.8 | 1280 | 3990 | 4800 | 18.2 | 17.4 | 16.6 |
| | | 25+25+25+25+25+50 | 1.79 | 1.79 | 1.79 | 1.79 | 1.79 | 3.57 | 5.5 | 12.5 | 13.8 | 1280 | 3980 | 4800 | 18.1 | 17.3 | 16.6 |
| | | 25+25+25+25+25+60 | 1.69 | 1.69 | 1.69 | 1.69 | 1.69 | 4.05 | 5.5 | 12.5 | 13.8 | 1280 | 3980 | 4800 | 18.1 | 17.3 | 16.6 |
| | | 25+25+25+25+35+35 | 1.84 | 1.84 | 1.84 | 1.84 | 2.57 | 2.57 | 5.5 | 12.5 | 13.8 | 1280 | 3980 | 4800 | 18.1 | 17.3 | 16.6 |
| | | 25+25+25+25+35+50 | 1.69 | 1.69 | 1.69 | 1.69 | 2.36 | 3.38 | 5.5 | 12.5 | 13.8 | 1280 | 3980 | 4800 | 18.1 | 17.3 | 16.6 |
| | | 25+25+25+25+35+60 | 1.60 | 1.60 | 1.60 | 1.60 | 2.24 | 3.85 | 5.5 | 12.5 | 13.8 | 1280 | 3970 | 4800 | 18.1 | 17.3 | 16.6 |
| | | 25+25+25+35+35+35 | 1.74 | 1.74 | 1.74 | 2.43 | 2.43 | 2.43 | 5.5 | 12.5 | 13.8 | 1280 | 3980 | 4800 | 18.1 | 17.3 | 16.6 |
| | | 25+25+25+35+35+50 | 1.60 | 1.60 | 1.60 | 2.24 | 2.24 | 3.21 | 5.5 | 12.5 | 13.8 | 1280 | 3970 | 4800 | 18.1 | 17.3 | 16.6 |
| | | 25+25+35+35+35+35 | 1.64 | 1.64 | 2.30 | 2.30 | 2.30 | 2.30 | 5.5 | 12.5 | 13.8 | 1280 | 3970 | 4800 | 18.1 | 17.3 | 16.6 |

# CONTROL SYSTEM

## Wired Remote Control (option)

### RC-EX3A

### Advanced wired remote control

The RC-EX3A controller enables extensive access to service and maintenance data combined with easy to use full dot LCD backlight display.
All settings are changed by tapping the touch screen panel.

- **Economy & Timer:**
  Peak cut timer. Home Leave Operation. Energy-saving operation.
- **Comfort:**
  Hi power operation. Automatic fan speed. Outdoor silent mode.
- **Convenience:**
  Multi language settings. LCD contrast setting. Function switch.
  External Input/Output Function
- **Service:**
  Error code display. Operation data display. Backup Control.

---

### RC-E5

### Wired remote control

The RC-E5 controller enables extensive access to service and maintenance technical data combined with easy to use functions and a clear LCD display.

- **Weekly timer function as standard**
- **Timer operation**
- **Run hour metres to facilitate maintenance checking**
- **Room temperature controlled by the remote control sensor**
- **Changeable set temperature ranges**

---

### RCH-E3

### Simple wired remote control

Designed especially for hotel rooms, the controller's buttons are limited only to the minimum required functions such as ON/OFF, mode, temperature setting and fan speed. It is really simple and easy to use.

- **Up to 16 units :**
  It can control up to 16 indoor units with pressing the AIRCON No. button
- **AUTO restart**
  This function allows starting the air conditioner automatically when power supply is restored after power failure or by turning on the power switch.

---

## Wireless remote control (option)

For wireless control simply insert the infrared receiver kit on a corner of the panel.

**RCN-TC-5AW-E3**
(FDTC-VH1,VH)

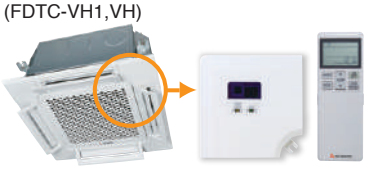

**RCN-TC-24W-E2**
(FDTC-VF)

**RCN-KIT4-E2**
(FDUM-VH)

**RCN-E-E3**
(FDE-VH)

# CONTROL OPTION

## Wired remote control can be connected

| Model | Interface | Remote Control |
|---|---|---|
| SRK-ZSX<br>SRK-ZR<br>SRK-ZS<br>SRK-ZTL*<br>SRF-ZS, ZSX, ZMX<br>SRR-ZS, ZM | SC-BIKN2-E | RC-EX3A<br>RC-E5 |
| FDTC-VH1, VH, VF<br>FDUM50VH<br>FDE50VH | not required | |

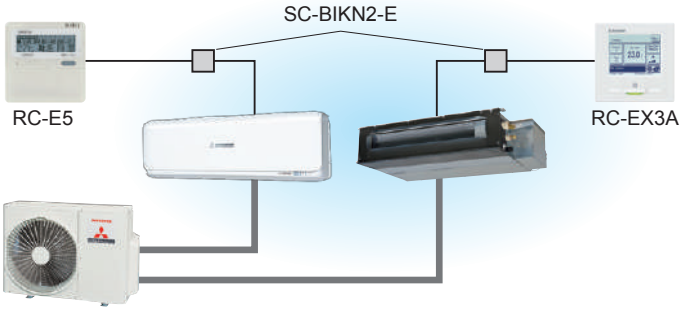


## Can be connected to SUPERLINK- II

| Model | Interface | Remote Control |
|---|---|---|
| SRK-ZSX<br>SRK-ZR<br>SRK-ZS<br>SRK-ZTL*<br>SRF-ZS, ZSX, ZMX<br>SRR-ZS, ZM | SC-BIKN2-E<br>SC-ADNA-E | RC-EX3A<br>RC-E5 |
| FDTC-VH1, VH, VF<br>FDUM50VH<br>FDE50VH | SC-ADNA-E | |

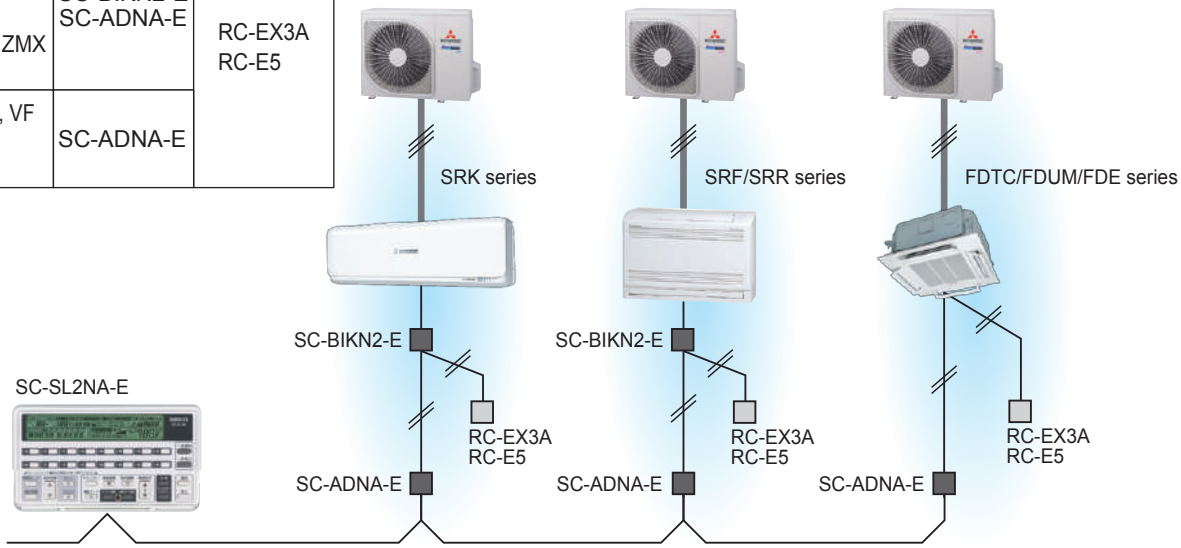


## External switch connection CnT

All indoor units are equipped with an additional connection point - CnT - to connect indoor units to an external ON/OFF switch; e.g. time clock, fire alarm, etc.

| Model | Interface |
|---|---|
| SRK-ZSX<br>SRK-ZR<br>SRK-ZS<br>SRK-ZTL*<br>SRF-ZS,ZSX,ZMX<br>SRR-ZS,ZM | SC-BIKN2-E |
| FDTC-VH1, VH,VF<br>FDUM50VH<br>FDE50VH | not required |

**Remote surveillance system**

**Card key on-off**

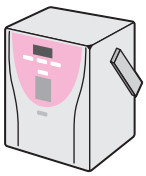

**Humidifier linkage**

* Wired Remote control, SUPERLINK-II and CnT can be used but required SC-BIKN2 connected to CNS and Wireless control system will be no longer available.

# DIMENSIONS (Unit: mm)

## SRK20ZSX-W, -WB, -WT SRK25ZSX-W, -WB, -WT
## SRK35ZSX-W, -WB, -WT SRK50ZSX-W, -WB, -WT
## SRK60ZSX-W, -WB, -WT
## SRK20ZSX-S SRK25ZSX-S SRK35ZSX-S
## SRK50ZSX-S SRK60ZSX-S

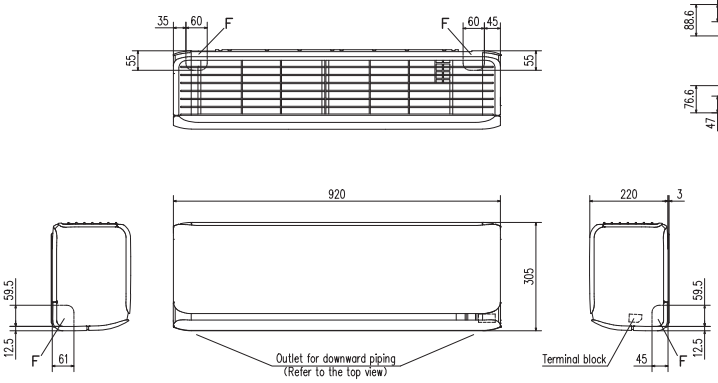


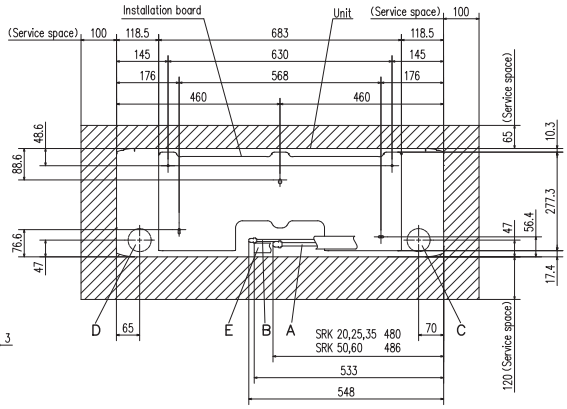


Space for installation and service when viewing from the front

| Symbol | Content | | |
|---|---|---|---|
| A | Gas piping | SRK 20,25,35<br>SRK 50,60 | ϕ9.52 (3/8") (Flare)<br>ϕ12.7 (1/2") (Flare) |
| B | Liquid piping | ϕ6.35 (1/4") (Flare) | |
| C | Hole on wall for right rear piping | (ϕ65) | |
| D | Hole on wall for left rear piping | (ϕ65) | |
| E | Drain hose | VP16 | |
| F | Outlet for piping | | |

## SRK63ZR-W SRK71ZR-W SRK80ZR-W SRK100ZR-W
## SRK63ZR-S SRK71ZR-S SRK80ZR-S SRK100ZR-S

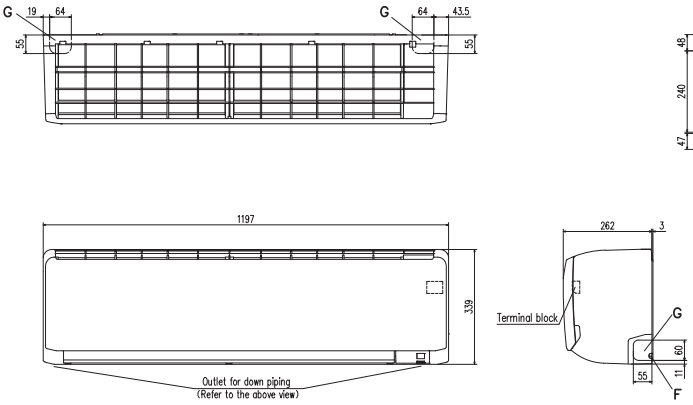


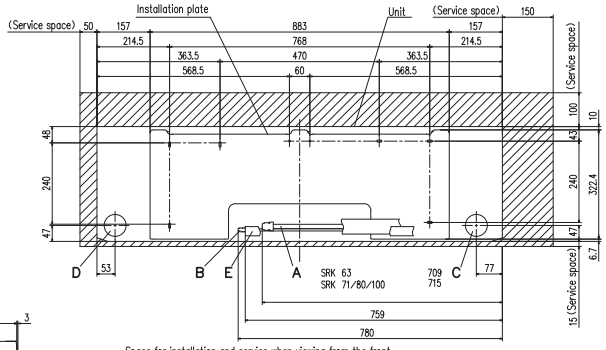


Space for installation and service when viewing from the front

| Symbol | Content | | |
|---|---|---|---|
| A | Gas piping | SRK 63<br>SRK 71,80,100 | ϕ12.7 (1/2") (Flare)<br>ϕ15.88 (5/8") (Flare) |
| B | Liquid piping | SRK 63,71,80<br>SRK 100 | ϕ6.35 (1/4") (Flare)<br>ϕ9.52 (3/8") (Flare) |
| C | Hole on wall for right rear piping | (ϕ65) | |
| D | Hole on wall for left rear piping | (ϕ65) | |
| E | Drain hose | VP16 | |
| F | Outlet for wiring (on both side) | | |
| G | Outlet for piping (on both side) | | |

## SRK20ZS-W,-WB,-WT SRK25ZS-W,-WB,-WT
## SRK35ZS-W,-WB,-WT SRK50ZS-W,-WB,-WT
## SRK20ZS-S,-SB,-ST SRK25ZS-S,-SB,-ST
## SRK35ZS-S,-SB,-ST SRK50ZS-S,-SB,-ST

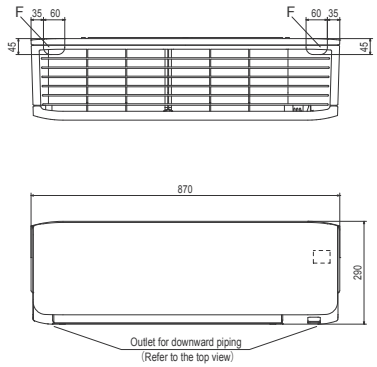


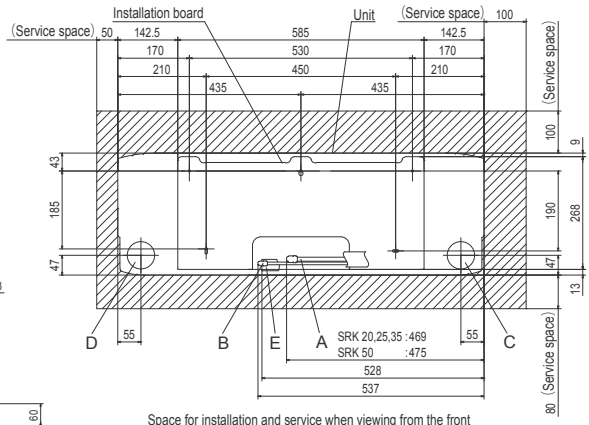


Space for installation and service when viewing from the front

| Symbol | Content | | |
|---|---|---|---|
| A | Gas piping | SRK20, 25, 35<br>SRK50 | ϕ9.52 (3/8") (Flare)<br>ϕ12.7 (1/2") (Flare) |
| B | Liquid piping | ϕ6.35 (1/4") (Flare) | |
| C | Hole on wall for right rear piping | (ϕ65) | |
| D | Hole on wall for left rear piping | (ϕ65) | |
| E | Drain hose | VP16 | |
| F | Outlet for piping (on both side) | | |

## SRK63ZTL-W
## SRK71ZTL-W

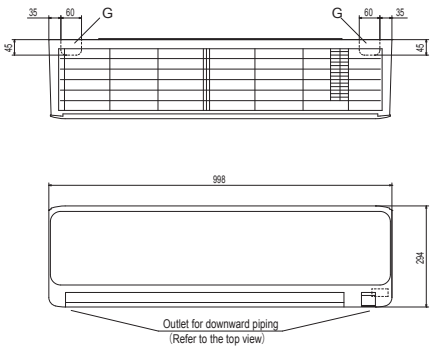


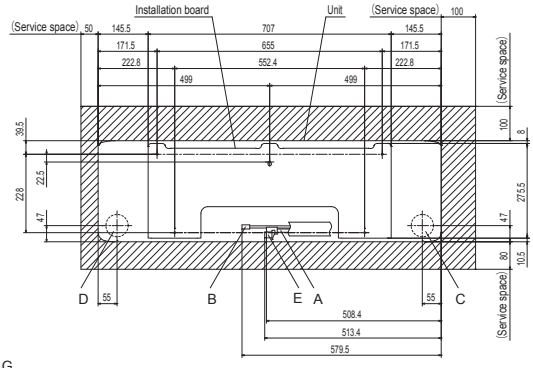


Space for installation and service when viewing from the front

| Symbol | Content | |
|---|---|---|
| A | Gas piping | φ12.7 (1/2") (Flare) |
| B | Liquid piping | φ6.35 (1/4") (Flare) |
| C | Hole on wall for right rear piping | (φ65) |
| D | Hole on wall for left rear piping | (φ65) |
| E | Drain hose | VP16 |
| F | Outlet for wiring (on both side) | |
| G | Outlet for piping (on both side) | |

## SRK25ZSP-W SRK35ZSP-W SRK45ZSP-W SRK50ZSP-W
## SKM20ZSP-W SKM25ZSP-W SKM35ZSP-W
## SRK25ZSP-S SRK35ZSP-S SRK45ZSP-S

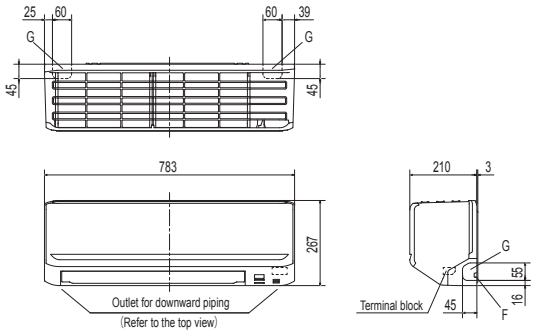


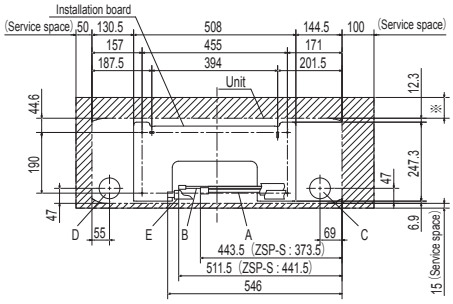


| ※ | Service space | 65 |
|---|---|---|
| | Recommendation | 80 |

Space for installation and service when viewing from the front

| Symbol | Content | |
|---|---|---|
| A | Gas piping | SRK25,35 SKM20,25,35 φ9.52 (3/8") (Flare)<br>SRK45,50 φ12.7 (1/2") (Flare) |
| B | Liquid piping | φ6.35 (1/4") (Flare) |
| C | Hole on wall for right rear piping | (φ65) |
| D | Hole on wall for left rear piping | (φ65) |
| E | Drain hose | VP16 |
| F | Outlet for wiring | |
| G | Outlet for piping (on both side) | |

## SRF25ZS-W SRF35ZS-W SRF50ZSX-W
## SRF25ZMX-S SRF35ZMX-S SRF50ZMX-S

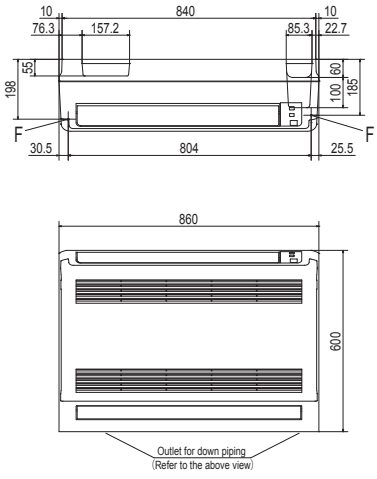


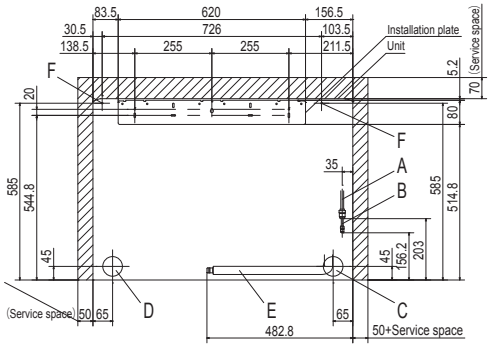


Space for installation and service when viewing from the front

| Symbol | Content | | |
|---|---|---|---|
| A | Gas piping | Model | 25,35 : φ9.52 (3/8") (Flare)<br>50 : φ12.7 (1/2") (Flare) |
| B | Liquid piping | | φ6.35 (1/4") (Flare) |
| C | Hole on wall for right rear piping | | (φ65) |
| D | Hole on wall for left rear piping | | (φ65) |
| E | Drain hose | | VP16 |
| F | Screw point fasten the indoor unit | | φ5 |
| G | Outlet for piping (on both side) | | |

# DIMENSIONS (Unit: mm)

## SRR25ZS-W SRR35ZS-W SRR25ZM-S SRR35ZM-S

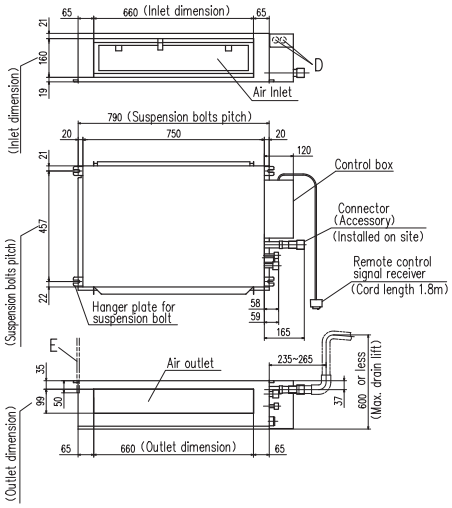


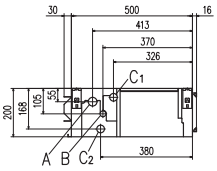


Space for installation and service

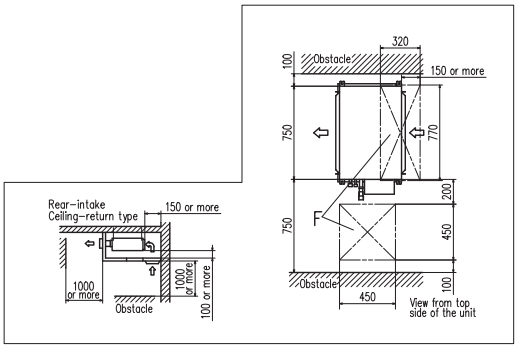


| Symbol | Content | |
|---|---|---|
| | Model | 25,35 |
| A | Gas piping | ø9.52 (3/8") (Flare) |
| B | Liquid piping | ø6.35 (1/4") (Flare) |
| C1 | Drain piping | VP25 (I.D.25 , O.D.32) (Used with attached connector) |
| C2 | Drain piping (Gravity drainage) | VP25 (I.D.25 , O.D.32) (Used with attached connector) |
| D | Hole for wiring | ø25 x 2 |
| E | Suspension bolts | (M10) |
| F | Inspection hole | (450X450) , (320X770) |

## SRR50ZS-W SRR60ZS-W

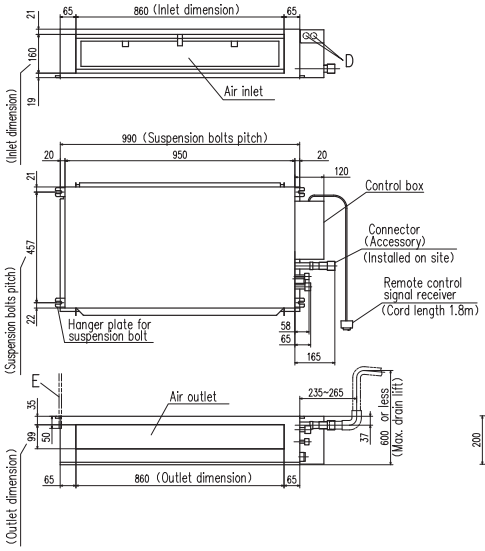


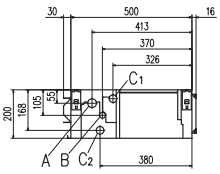


Space for installation and service

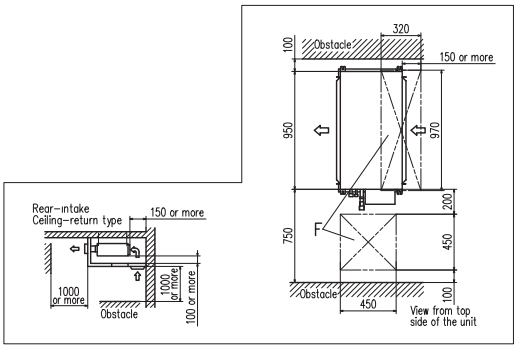


| Symbol | Content | |
|---|---|---|
| | Model | 50,60 |
| A | Gas piping | ø12.7 (1/2") (Flare) |
| B | Liquid piping | ø6.35 (1/4") (Flare) |
| C1 | Drain piping | VP25 (I.D.25 , O.D.32) (Used with attached connector) |
| C2 | Drain piping (Gravity drainage) | VP25 (I.D.25 , O.D.32) (Used with attached connector) |
| D | Hole for wiring | ø25 x 2 |
| E | Suspension bolts | (M10) |
| F | Inspection hole | (450X450) , (320X970) |

## FDTC25VH1 FDTC35VH1 FDTC40VH FDTC50VH FDTC60VH

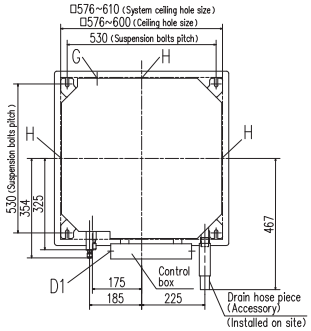


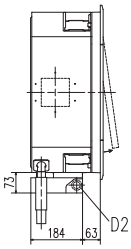


Decorative panel

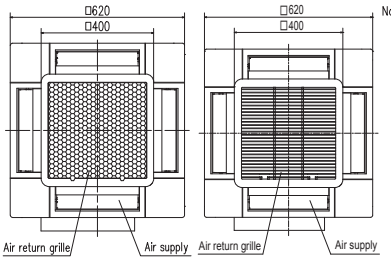


Notes (1) The model name label is attached to the control box lid.
(2) This unit is designed for 2x2 grid ceiling.
If it is installed on a ceiling other than 2x2 grid ceiling, provide an inspection opening on the control box side.
(3) Draft prevention function (*) is provided on the panel TC-PSA(G)E-5AW-E only.

| Symbol | Content | | |
|---|---|---|---|
| A | Gas piping | 25·35 | ø9.52(3/8"(Flare)) |
| | | 40~60 | ø12.7 (1/2") (Flare) |
| B | Liquid piping | ø6.35 (1/4") (Flare) |
| C | Drain piping | VP25 (O.D.32) |
| D1 | Power supply connection | |
| D2 | Remote control code and signal wiring connection | |
| F | Suspension bolts | (M10 or M8) |
| G | Outside air opening for ducting | (Knock out) |
| H | Air outlet opening for ducting | ø125 (Knock out) |
| J | Inspection opening | 450X450 |

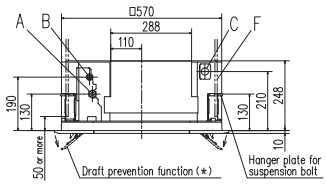


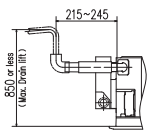


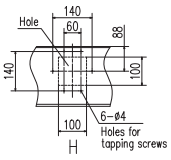


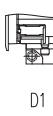


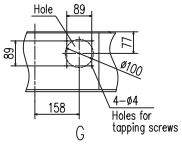


Space for installation and service

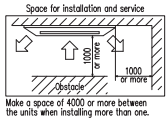


Make a space of 4000 or more between the units when installing more than one.

Inspection opening (Refer to note (2) )

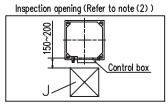

## FDTC25VF FDTC35VF FDTC40VF FDTC50VF FDTC60VF

| Symbol | Content | |
|---|---|---|
| A | Gas piping | 25.35 : φ9.52(3／8") (flare)<br>40～60 : φ12.7(1／2") (flare) |
| B | Liquid piping | φ6.35(1／4") (Flare) |
| C | Drain piping | VP20(I.D.20,O.D.26) Note(2) |
| D | Hole for wiring | φ25 |
| F | Suspension bolts | (M10 or M8) |
| G | Air outlet opening for ducting | (Knock out) |

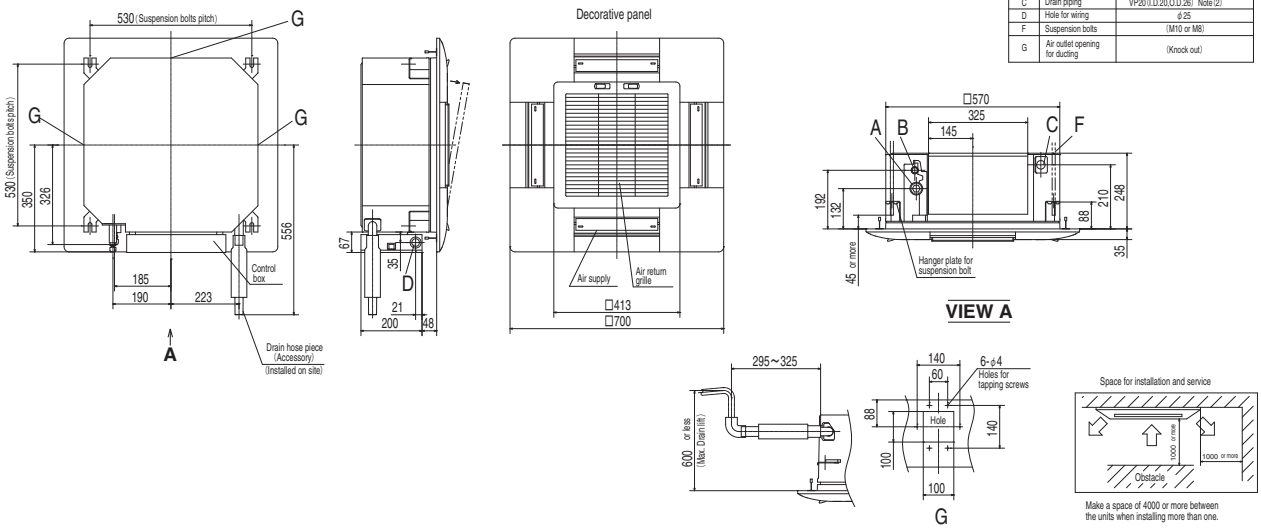


## FDUM50VH

| Symbol | Content | |
|---|---|---|
| A | Gas piping | φ12.7(1／2") (Flare) |
| B | Liquid piping | φ6.35(1／4") (Flare) |
| C1 | Drain piping | VP25(I.D.25, O.D.32) |
| C2 | Drain piping (Gravity drainage) | VP20(I.D.20, O.D.26) |
| D | Hole for wiring | |
| E | Suspension bolts | (M10) |
| F | Outside air opening for ducting | (φ150) (Knock out) |
| G | Air outlet opening for ducting | (φ125) (Knock out) |
| H | Inspection hole | (450X450) |

Note(1) The model name label is attached on the lid of the control box.

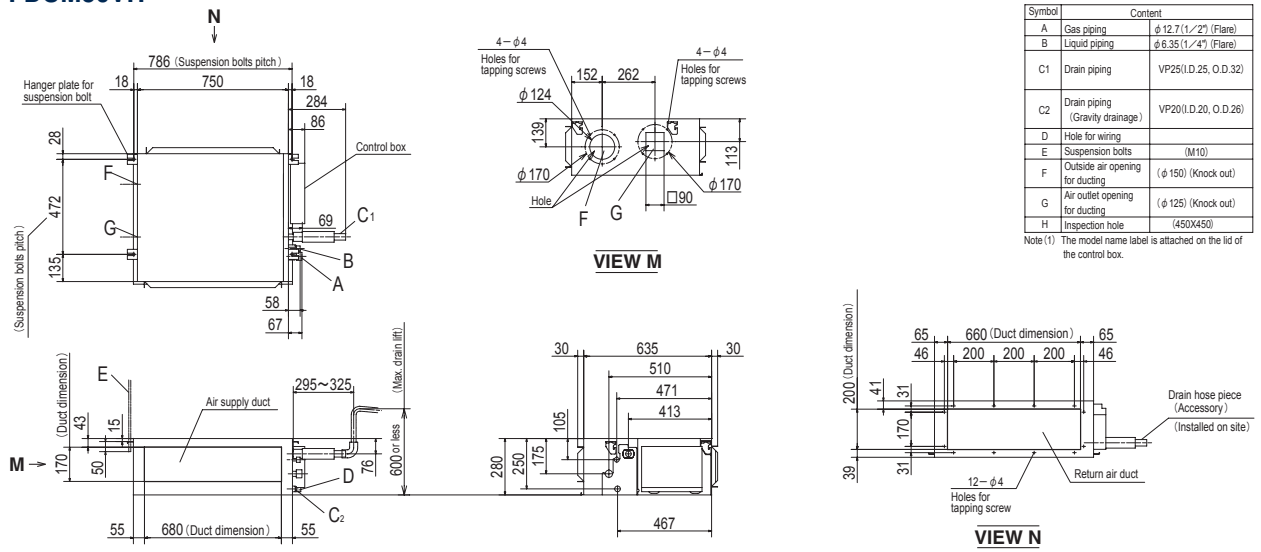


## FDE50VH

| Symbol | Content | |
|---|---|---|
| A | Gas piping | ø12.7 (1/2") (Flare) |
| B | Liquid piping | ø6.35 (1/4") (Flare) |
| C 1,2 | Drain piping | VP20 (I.D.20) |
| D | Hole for suspension bolt | (M10 or M8) |
| E | Back cutout | PE cover |
| F | Top cutout | Plate cover |
| G | Hole for drain piping (for left back) | (Knock out) |

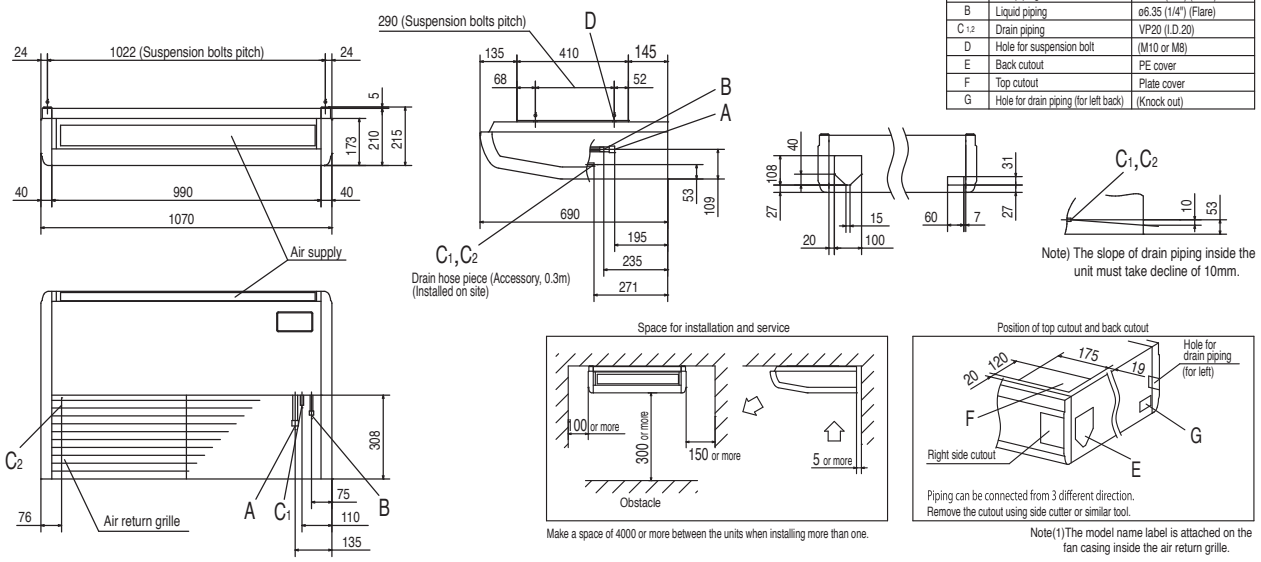


Note(1)The model name label is attached on the fan casing inside the air return grille.

# DIMENSIONS (Unit: mm)

## SRC20ZSX-W,-S SRC25ZSX-W,-S SRC35ZSX-W,-S SRC40ZSX-W1,-S SRC50ZSX-W2,-S SRC60ZSX-W1,-S SRC63ZR-W,-S SRC63ZTL-W SRC71ZTL-W

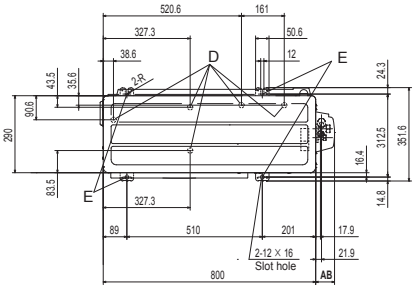


| Symbol | Content | |
|---|---|---|
| A | Service valve connection (gas side) | 20,25,35 φ9.52(3/8")(Flare)<br>40,50,60,63,71 φ12.7(1/2")(Flare) |
| B | Service valve connection (liquid side) | φ6.35 (1/4") (Flare) |
| C | Pipe/cable draw-out hole | |
| D | Drain discharge hole | φ20×5places |
| E | Anchor bolt hole | M10-12×4places |

Minimum installation space

| Examples of installation / Dimensions | I | II | III | IV |
|---|---|---|---|---|
| L1 | Open | 280 | 280 | 180 |
| L2 | 100 | 75 | Open | Open |
| L3 | 100 | 80 | 80 | 80 |
| L4 | 250 | Open | 250 | Open |

| | AA | AB |
|---|---|---|
| ZSX | 93 | 71.2 |
| ZR | 94.5 | 71 |
| ZTL | 94.5 | 71 |

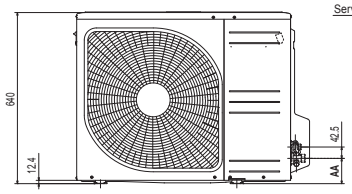


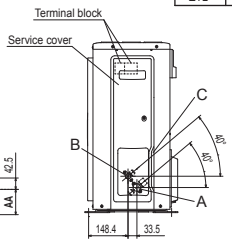


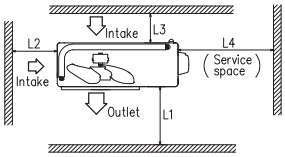


* The ZSX / ZR series does not have fin guard.

## SRC50ZS-W,-S SRC25ZMX-S SRC35ZMX-S SRC45ZSP-W,-S SRC50ZSP-W

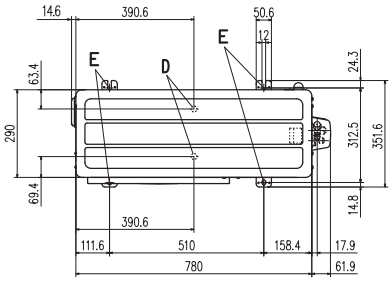


| Symbol | Content | |
|---|---|---|
| A | Service valve connection (gas side) | ZMX : φ9.52(3/8") (flare)<br>ZS,ZSP : φ12.7(1/2") (flare) |
| B | Service valve connection (liquid side) | φ6.35 (1/4") (Flare) |
| C | Pipe/cable draw-out hole | |
| D | Drain discharge hole | φ20×2places |
| E | Anchor bolt hole | M10-12×4places |

| | Installation space |
|---|---|
| L1 | 280 or more |
| L2 | 100 or more |
| L3 | 80 or more |
| L4 | 250 or more |

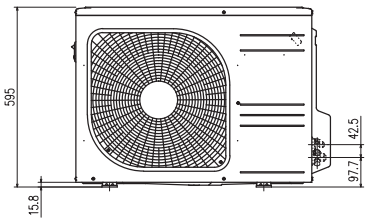


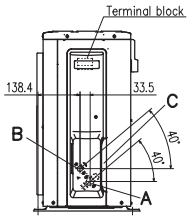


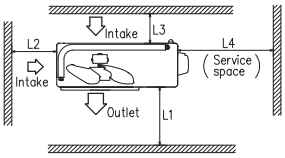


## SRC20ZS-W,-S SRC25ZS-W2,-S SRC35ZS-W2,-S

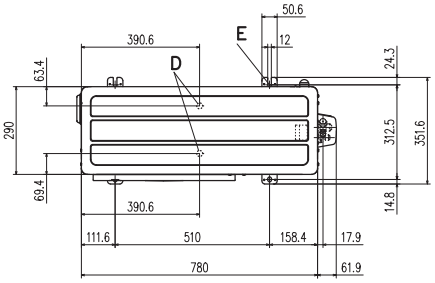


| Symbol | Content | |
|---|---|---|
| A | Service valve connection (gas side) | φ9.52 (3/8") (Flare) |
| B | Service valve connection (liquid side) | φ6.35 (1/4") (Flare) |
| C | Pipe/cable draw-out hole | |
| D | Drain discharge hole | φ20×2places |
| E | Anchor bolt hole | M10-12×4places |

| | Installation space |
|---|---|
| L1 | 280 or more |
| L2 | 100 or more |
| L3 | 80 or more |
| L4 | 250 or more |

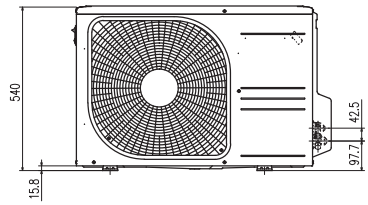


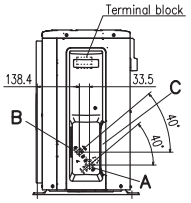


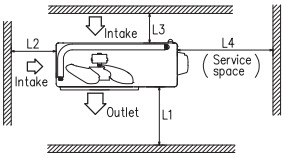

## SRC71ZR-W,-S SRC80ZR-W,-S FDC100VNP-W

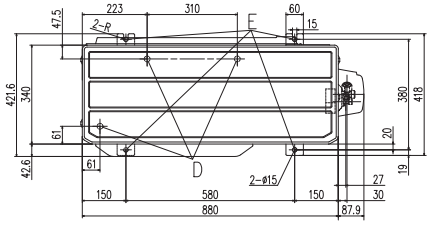


| Symbol | Content | |
|---|---|---|
| A | Service valve connection (gas side) | ø15.88 (5/8") (Flare) |
| B | Service valve connection (liquid side) | ø6.35 (1/4") (Flare) |
| C | Pipe/cable draw-out hole | |
| D | Drain discharge hole | ø20 x 3 places |
| E | Anchor bolt hole | M10 x 4 places |

Minimum installation space

| Examples of installation / Dimensions | I | II | III |
|---|---|---|---|
| L1 | Open | Open | 500 |
| L2 | 300 | 250 | Open |
| L3 | 100 | 150 | 100 |
| L4 | 250 | 250 | 250 |

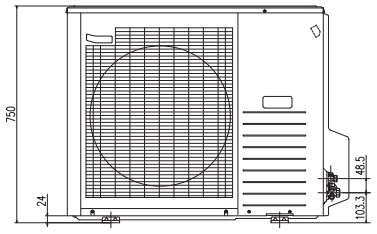


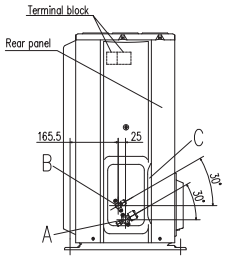


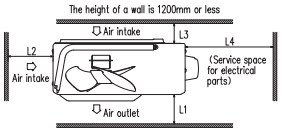


## SRC25ZSP-W,-S SRC35ZSP-W,-S

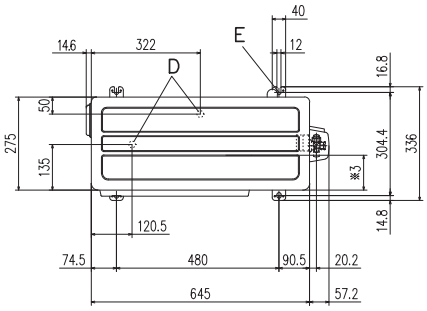


| Symbol | Content | |
|---|---|---|
| A | Service valve connection (gas side) | ø9.52 (3/8") (Flare) |
| B | Service valve connection (liquid side) | ø6.35 (1/4") (Flare) |
| C | Pipe/cable draw-out hole | |
| D | Drain discharge hole | ø20×2places |
| E | Anchor bolt hole | M10-12×4places |

| | Installation space |
|---|---|
| L1 | 280 or more |
| L2 | 100 or more |
| L3 | 80 or more |
| L4 | 250 or more |

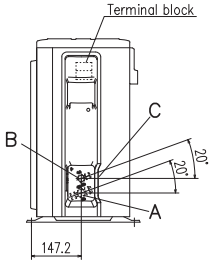


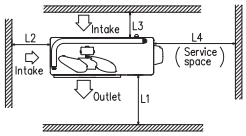


Minimum installation space

## FDC100VNP

| Symbol | Content | |
|---|---|---|
| A | Service valve connection (gas side) | ø15.88 (5/8") (Flare) |
| B | Service valve connection (liquid side) | ø9.52 (3/8") (Flare) |
| C | Pipe/cable draw-out hole | |
| D | Drain discharge hole | ø20×3 places |
| E | Anchor bolt hole | M10×4 places |
| F | Cable draw-out hole | ø30×3 places |

Notes
(1) It must not be surrounded by walls on the four sides.
(2) The unit must be fixed with anchor bolts. An anchor bolt must not protrude more than 15mm.
(3) Where the unit is subject to strong winds, lay it in such a direction that the blower outlet face is perpendicular to the dominant wind direction.
(4) Leave 1m or more space above the unit.
(5) A wall in front of the blower outlet must not exceed the units height.
(6) The model name label is attached on the service panel.

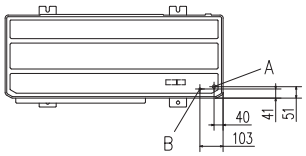


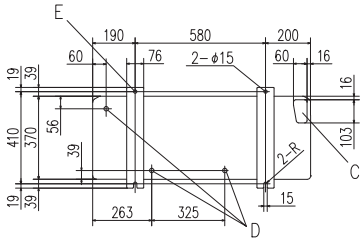


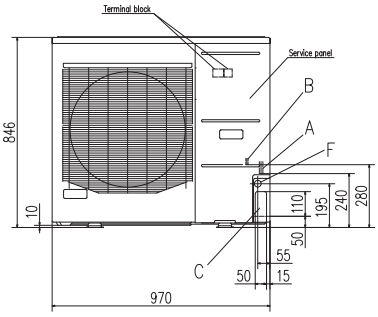


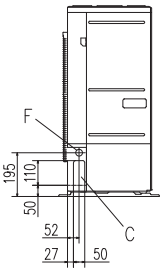


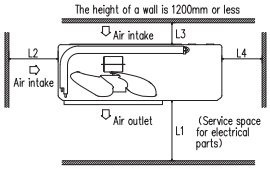


Minimum installation space

| Examples of installation / Dimensions | I | II | III |
|---|---|---|---|
| L1 | Open | Open | 500 |
| L2 | 300 | 250 | Open |
| L3 | 100 | 150 | 100 |
| L4 | 250 | 250 | 250 |

# DIMENSIONS (Unit: mm)

## SCM40ZS-W,-S SCM45ZS-W,-S

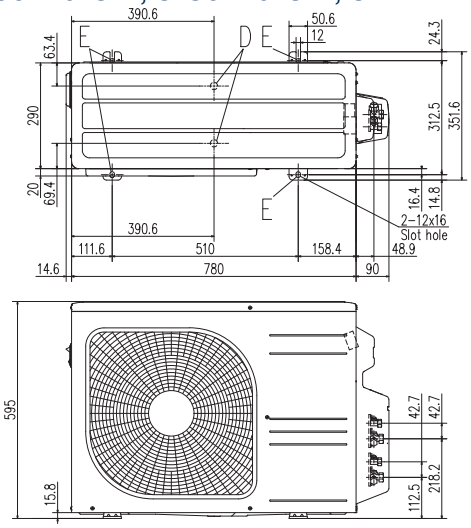


Notes
(1) The unit must not be surrounded by walls on the four sides.
(2) The unit must be fixed with anchor bolts. An anchor bolt must not protrude more than 15mm.
(3) If the unit is installed in the location where there is a possibility of strong winds, place the unit such that the direction of air from the outlet gets perpendicular to the wind direction.
(4) Leave 200mm or more space above the unit.
(5) The wall height on the outlet side should be 1200mm or less.
(6) The model name label is attached on the right side of the unit.

| Symbol | Content | |
|---|---|---|
| A | Service valve connection (gas side) | ϕ9.52 (3/8") (Flare) |
| B | Service valve connection (liquid side) | ϕ6.35 (1/4") (Flare) |
| C | Pipe/cable draw-out hole | |
| D | Drain discharge hole | ϕ20×2places |
| E | Anchor bolt hole | M10-12×4places |

| | Installation space |
|---|---|
| L1 | 280 or more |
| L2 | 100 or more |
| L3 | 80 or more |
| L4 | 250 or more |

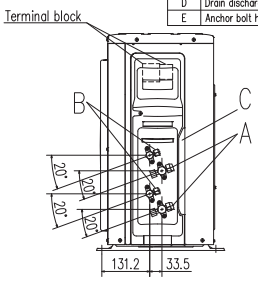


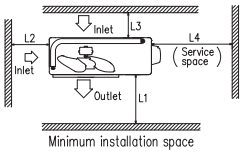


Minimum installation space

## SCM50ZS-W SCM60ZS-W
## SCM50ZS-S1 SCM60ZM-S1

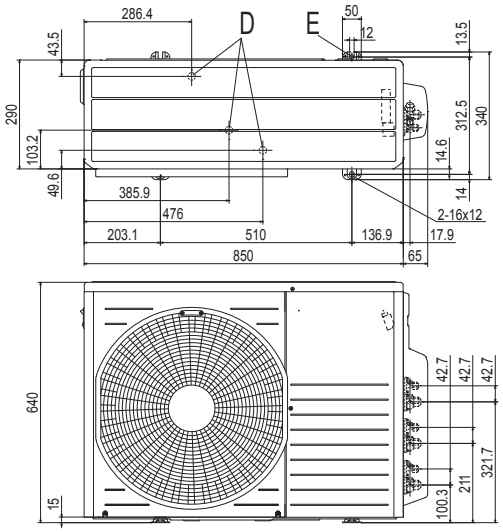


Notes
(1) The unit must not be surrounded by walls on the four sides.
(2) The unit must be fixed with anchor bolts. An anchor bolt must not protrude more than 15mm.
(3) If the unit is installed in the location where there is a possibility of strong winds, place the unit such that the direction of air from the outlet gets perpendicular to the wind direction.
(4) Leave 200mm or more space above the unit.
(5) The wall height on the outlet side should be 1200mm or less.
(6) The model name label is attached on the right side of the unit.

| Symbol | Content | |
|---|---|---|
| A | Service valve connection (gas side) | ϕ9.52 (3/8") Flare) |
| B | Service valve connection (liquid side) | ϕ6.35 (1/4") Flare) |
| C | Pipe/cable draw-out hole | |
| D | Drain discharge hole | ϕ20 x 3 places |
| E | Anchor bolt hole | M10-12 x 4 places |

Minimum installation space

| | Installation space |
|---|---|
| L1 | 600 or more |
| L2 | 100 or more |
| L3 | 100or more |
| L4 | No obstacles (Service space or electrical parts) |

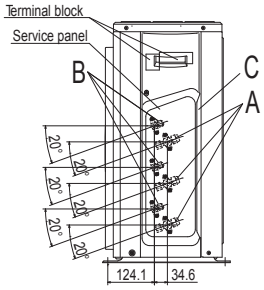


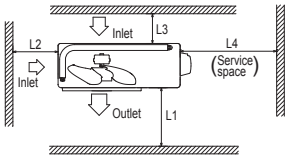


## SCM71ZS-W SCM80ZS-W
## SCM71ZM-S1 SCM80ZM-S1

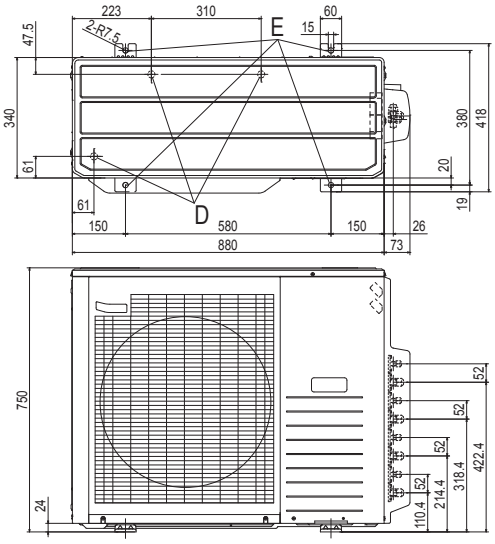


Notes
(1) It must not be surrounded by walls on four sides.
(2) The unit must be fixed with anchor bolts. An anchor bolt must not protrude more than 15mm.
(3) Where the unit is subjected to strong winds, lay it in such a direction that the blower outlet faces perpendicularly to the dominant wind direction.
(4) Leave 1.2m or more space above the unit.
(5) A wall in front of the blower outlet must not exceed the unit's height.
(6) The model name label is attached on the rear panel.

| Symbol | Content | |
|---|---|---|
| A | Service valve connection (gas side) | ϕ9.52 (3/8") Flare) |
| B | Service valve connection (liquid side) | ϕ6.35 (1/4") Flare) |
| C | Pipe/cable draw-out hole | |
| D | Drain discharge hole | ϕ20 x 3 places |
| E | Anchor bolt hole | M10 x 4 places |

Minimum installation space

| Examples of installation / Dimensions | I | II | III |
|---|---|---|---|
| L1 | Open | Open | 500 |
| L2 | 300 | 250 | Open |
| L3 | 100 | 150 | 100 |
| L4 | 250 | 250 | 250 |

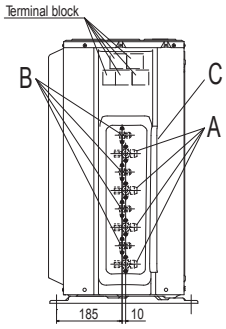


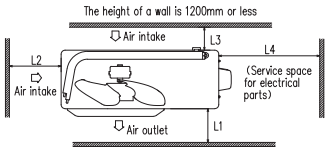

## SCM100ZS-W
## SCM100ZM-S

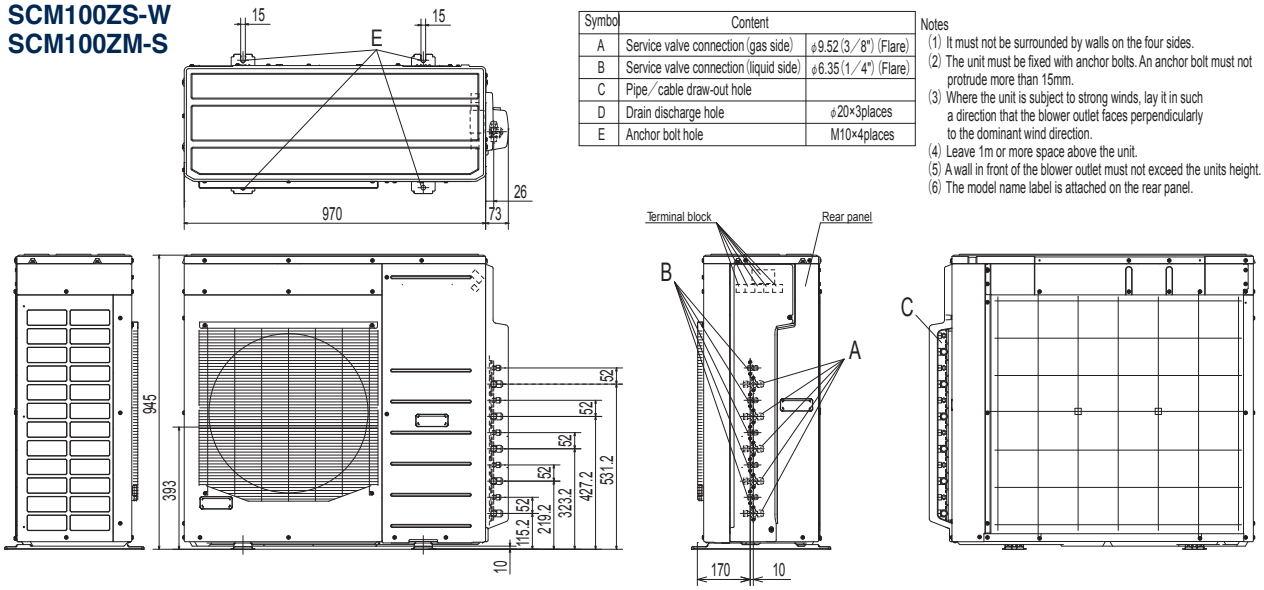


| Symbol | Content | |
|---|---|---|
| A | Service valve connection (gas side) | φ9.52 (3/8") (Flare) |
| B | Service valve connection (liquid side) | φ6.35 (1/4") (Flare) |
| C | Pipe/cable draw-out hole | |
| D | Drain discharge hole | φ20×3places |
| E | Anchor bolt hole | M10×4places |

Notes
(1) It must not be surrounded by walls on the four sides.
(2) The unit must be fixed with anchor bolts. An anchor bolt must not protrude more than 15mm.
(3) Where the unit is subject to strong winds, lay it in such a direction that the blower outlet faces perpendicularly to the dominant wind direction.
(4) Leave 1m or more space above the unit.
(5) A wall in front of the blower outlet must not exceed the units height.
(6) The model name label is attached on the rear panel.

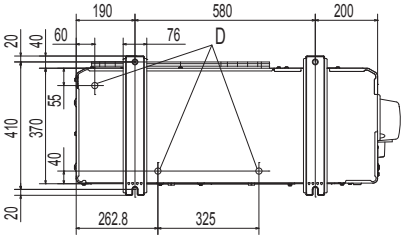


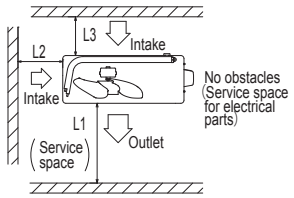


Minimum installation space

| Dimensions \ Examples of installation | I | II | III |
|---|---|---|---|
| L1 | Open | Open | 500 |
| L2 | 300 | 5 | Open |
| L3 | 150 | 300 | 150 |

## SCM125ZM-S

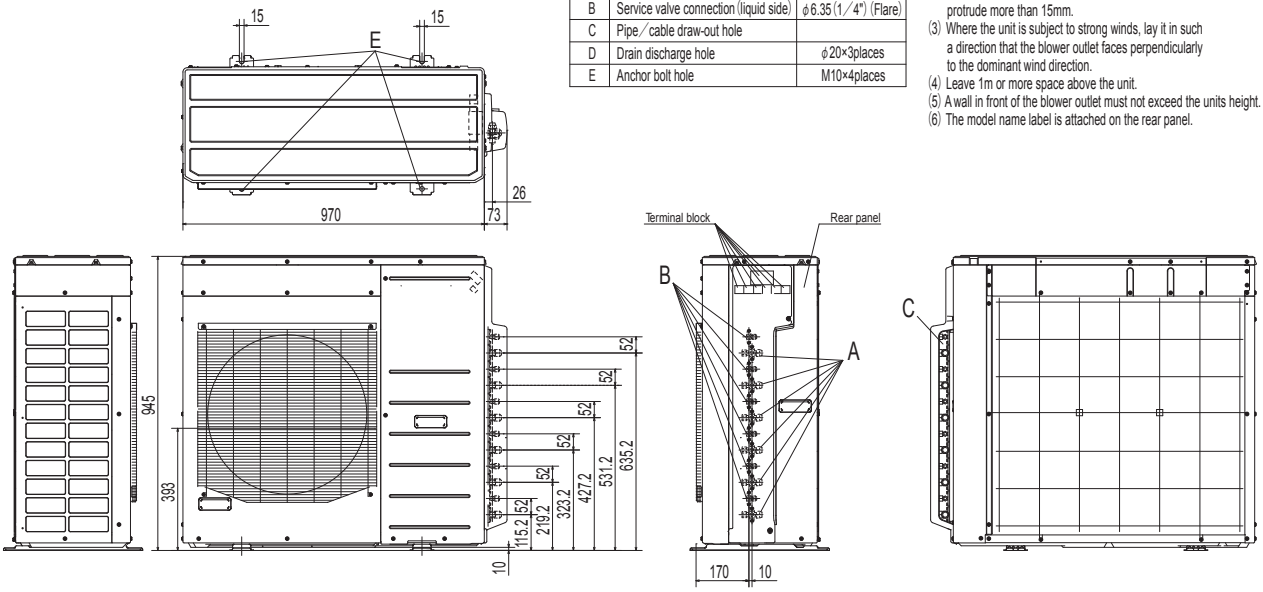


| Symbol | Content | |
|---|---|---|
| A | Service valve connection (gas side) | φ9.52 (3/8") (Flare) |
| B | Service valve connection (liquid side) | φ6.35 (1/4") (Flare) |
| C | Pipe/cable draw-out hole | |
| D | Drain discharge hole | φ20×3places |
| E | Anchor bolt hole | M10×4places |

Notes
(1) It must not be surrounded by walls on the four sides.
(2) The unit must be fixed with anchor bolts. An anchor bolt must not protrude more than 15mm.
(3) Where the unit is subject to strong winds, lay it in such a direction that the blower outlet faces perpendicularly to the dominant wind direction.
(4) Leave 1m or more space above the unit.
(5) A wall in front of the blower outlet must not exceed the units height.
(6) The model name label is attached on the rear panel.

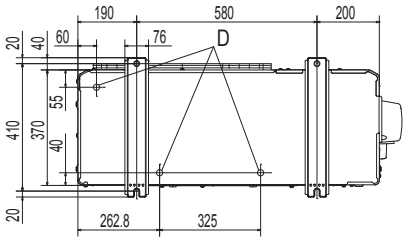


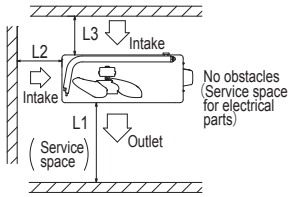


Minimum installation space

| Dimensions \ Examples of installation | I | II | III |
|---|---|---|---|
| L1 | Open | Open | 500 |
| L2 | 300 | 5 | Open |
| L3 | 150 | 300 | 150 |

# ENERGY EFFICIENT AND ENVIRONMENTALLY CONSCIOUS

## ENERGY LABEL – FOR EU/EEA AREA ONLY –

**SEER and SCOP is defined in European regulations listed below.**

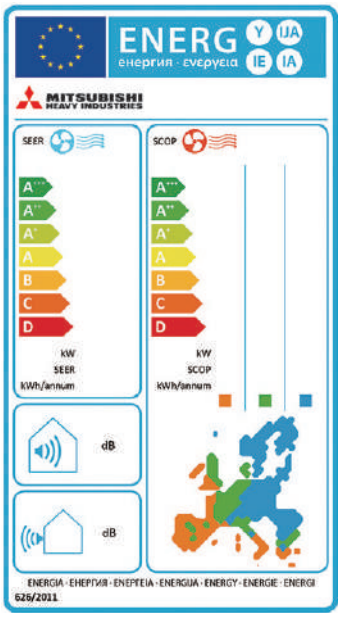


No.626/2011 of 4 May 2011:
energy labeling of air conditioners
(below cooling capacity 12kW).

No.206/2012 of 6 March 2012: requirement for air conditioners and comfort fans.

Seasonal efficiency is the new way of rating the true efficiency of heating and cooling products over an entire year.
Set by the EU's new regulation implementing Eco-Design Directive for Energy related Product (ErP) which specifies the minimum efficiency of air conditioners manufacturers must integrate into their products.
The new Seasonal Efficiency rating system that must be used for heating and cooling by all manufacturers are;
SEER - Seasonal Efficiency Ratio (value in cooling)
SCOP - Seasonal Coefficient of Performance (value in heating)
The new rating system will indicate the true efficiency of the energy using product at specified condition.

## Employment of lead-free solder

**Adapted to RoHS directive**

### RoHS:Restriction of Hazardous substances

In order to avoid the release of hazardous substances into the environments, all models have utilised lead-free solder application. It has been considered to be difficult to use lead-free solder for practical applications because it requires higher solder temperatures at assembly, which can jeopardize reliability. However our PbF soldering method can produce a higher quality lead-free printed circuit board.

### Employment of R32 R410A

All models use refrigerant R32 or R410A characterized by the ozone depletion coefficient being 0.

### Excellent Energy Saving

High performance and excellent energy savings are achieved at the same time by heat exchanger's increased capacity and employment of high efficiency DC motor.

**Based on European regulations listed below, please refer the following specification table.**

## – Single-split

| Indoor unit | | SRK20ZSX-W, -WB, -WT | SRK25ZSX-W, -WB, -WT | SRK35ZSX-W, -WB, -WT | SRK50ZSX-W, -WB, -WT | SRK60ZSX-W, -WB, -WT | SRK63ZR-W | SRK71ZR-W |
|---|---|---|---|---|---|---|---|---|
| Outdoor unit | | SRC20ZSX-W | SRC25ZSX-W | SRC35ZSX-W | SRC50ZSX-W2 | SRC60ZSX-W1 | SRC63ZR-W | SRC71ZR-W |
| Energy class (cooling/heating) | | A+++/A+++ | A+++/A+++ | A+++/A+++ | A++/A++ | A++/A++ | A++/A++ | A++/A+ |
| SEER | | 10.00 | 10.30 | 9.50 | 8.30 | 7.80 | 8.10 | 7.40 |
| SCOP (Average climate) | | 5.20 | 5.20 | 5.10 | 4.70 | 4.70 | 4.70 | 4.50 |
| Pdesign (cooling/heating(@-10°C)) | kW | 2.00/2.80 | 2.50/3.00 | 3.50/3.40 | 5.00/4.50 | 6.10/5.20 | 6.30/5.40 | 7.10/6.60 |
| Annual electricity consumption (cooling/heating) | kWh/a | 70/754 | 85/808 | 129/934 | 211/1341 | 274/1551 | 273/1608 | 337/2055 |
| Designated heating season | | Average | | | | | | |

| Indoor unit | | SRK80ZR-W | SRK100ZR-W | SRK20ZS-W, -WB, -WT | SRK25ZS-W, -WB, -WT | SRK35ZS-W, -WB, -WT | SRK50ZS-W, -WB, -WT | SRK63ZTL-W |
|---|---|---|---|---|---|---|---|---|
| Outdoor unit | | SRC80ZR-W | FDC100VNP-W | SRC20ZS-W | SRC25ZS-W2 | SRC35ZS-W2 | SRC50ZS-W | SRC63ZTL-W |
| Energy class (cooling/heating) | | A++/A+ | A++/A+ | A+++/A++ | A+++/A++ | A++/A++ | A++/A++ | A++/A++ |
| SEER | | 7.00 | 6.11 | 8.50 | 8.50 | 8.40 | 7.00 | 7.50 |
| SCOP (Average climate) | | 4.40 | 4.14 | 4.60 | 4.70 | 4.70 | 4.60 | 4.60 |
| Pdesign (cooling/heating(@-10°C)) | kW | 8.00/7.10 | 9.6/6.0 | 2.00/2.60 | 2.50/2.70 | 3.50/3.00 | 5.00/3.80 | 6.30/5.30 |
| Annual electricity consumption (cooling/heating) | kWh/a | 401/2259 | 551/2028 | 83/793 | 103/804 | 146/895 | 250/1158 | 295/1615 |
| Designated heating season | | Average | | | | | | |

| Indoor unit | | SRK71ZTL-W | SRK25ZSP-W | SRK35ZSP-W | SRK45ZSP-W | SRK50ZSP-W | SRF25ZS-W | SRF35ZS-W |
|---|---|---|---|---|---|---|---|---|
| Outdoor unit | | SRC71ZTL-W | SRC25ZSP-W | SRC35ZSP-W | SRC45ZSP-W | SRC50ZSP-W | SRC25ZS-W2 | SRC35ZS-W2 |
| Energy class (cooling/heating) | | A++/A+ | A++/A+ | A++/A+ | A++/A+ | A++/A+ | A++/A+ | A++/A++ |
| SEER | | 7.10 | 6.80 | 7.30 | 6.30 | 6.20 | 7.40 | 8.10 |
| SCOP (Average climate) | | 4.40 | 4.10 | 4.40 | 4.20 | 4.20 | 4.00 | 4.70 |
| Pdesign (cooling/heating(@-10°C)) | kW | 7.10/6.20 | 2.50/2.80 | 3.20/3.00 | 4.50/3.80 | 5.00/3.80 | 2.50/2.40 | 3.50/2.90 |
| Annual electricity consumption (cooling/heating) | kWh/a | 351/1972 | 129/957 | 155/955 | 251/1269 | 283/1269 | 119/840 | 152/864 |
| Designated heating season | | Average | | | | | | |

| Indoor unit | | SRF50ZSX-W | SRR25ZS-W | SRR35ZS-W | FDTC25VH1 | FDTC35VH1 | FDTC40VH | FDTC50VH |
|---|---|---|---|---|---|---|---|---|
| Outdoor unit | | SRC50ZSX-W2 | SRC25ZS-W2 | SRC35ZS-W2 | SRC25ZS-W2 | SRC35ZS-W2 | SRC40ZSX-W1 | SRC50ZSX-W2 |
| Energy class (cooling/heating) | | A++/A++ | A++/A+ | A++/A+ | A++/A+ | A++/A++ | A++/A+ | A++/A+ |
| SEER | | 7.50 | 6.60 | 6.80 | 6.80 | 7.10 | 6.94 | 6.52 |
| SCOP (Average climate) | | 4.60 | 4.10 | 4.50 | 4.00 | 4.60 | 4.37 | 4.30 |
| Pdesign (cooling/heating(@-10°C)) | kW | 5.00/4.10 | 2.50/2.50 | 3.50/3.10 | 2.50/2.40 | 3.50/2.90 | 4.0/4.0 | 5.0/4.3 |
| Annual electricity consumption (cooling/heating) | kWh/a | 234/1247 | 133/853 | 181/966 | 129/840 | 173/883 | 202/1283 | 269/1401 |
| Designated heating season | | Average | | | | | | |

*SEER/SCOP are based on EN14825:2016 and Commission regulation (EU) No.2016/2281. Temperature conditions for calculating SCOP are based on "Average climate".

| Indoor unit | | FDTC60VH | SRK20ZSX-S | SRK25ZSX-S | SRK35ZSX-S | SRK50ZSX-S | SRK60ZSX-S | SRK63ZR-S |
|---|---|---|---|---|---|---|---|---|
| Outdoor unit | | SRC60ZSX-W1 | SRC20ZSX-S | SRC25ZSX-S | SRC35ZSX-S | SRC50ZSX-S | SRC60ZSX-S | SRC63ZR-S |
| Energy class (cooling/heating) | | A++/A+ | A+++/A+++ | A+++/A+++ | A+++/A+++ | A++/A++ | A++/A++ | A++/A++ |
| SEER | | 6.45 | 9.50 | 9.60 | 9.20 | 8.20 | 7.60 | 7.60 |
| SCOP (Average climate) | | 4.10 | 5.20 | 5.20 | 5.10 | 4.70 | 4.70 | 4.70 |
| Pdesign (cooling/heating(@-10°C)) | kW | 5.6/5.1 | 2.00/2.70 | 2.50/2.90 | 3.50/3.30 | 5.00/4.50 | 6.10/5.20 | 6.30/5.40 |
| Annual electricity consumption (cooling/heating) | kWh/a | 304/1744 | 74/728 | 92/781 | 134/906 | 214/1341 | 282/1551 | 291/1610 |
| Designated heating season | | Average | | | | | | |

| Indoor unit | | SRK71ZR-S | SRK80ZR-S | SRK100ZR-S | SRK20ZS-S,-SB,-ST | SRK25ZS-S,-SB,-ST | SRK35ZS-S,-SB,-ST | SRK50ZS-S,-SB,-ST |
|---|---|---|---|---|---|---|---|---|
| Outdoor unit | | SRC71ZR-S | SRC80ZR-S | FDC100VNP | SRC20ZS-S | SRC25ZS-S | SRC35ZS-S | SRC50ZS-S |
| Energy class (cooling/heating) | | A++/A+ | A++/A+ | A++/A+ | A++/A++ | A++/A++ | A++/A++ | A++/A+ |
| SEER | | 7.20 | 6.60 | 6.60 | 7.80 | 7.80 | 7.80 | 6.26 |
| SCOP (Average climate) | | 4.50 | 4.40 | 4.40 | 4.60 | 4.60 | 4.60 | 4.20 |
| Pdesign (cooling/heating(@-10°C)) | kW | 7.10/6.60 | 8.00/7.10 | 10.0/7.20 | 2.00/2.40 | 2.50/2.50 | 3.50/2.80 | 5.00/3.90 |
| Annual electricity consumption (cooling/heating) | kWh/a | 346/2055 | 425/2261 | 531/2289 | 90/732 | 113/762 | 158/852 | 280/1300 |
| Designated heating season | | Average | | | | | | |

| Indoor unit | | SRK25ZSP-S | SRK35ZSP-S | SRK45ZSP-S | SRF25ZMX-S | SRF35ZMX-S | SRF50ZMX-S | SRR25ZM-S |
|---|---|---|---|---|---|---|---|---|
| Outdoor unit | | SRC25ZSP-S | SRC35ZSP-S | SRC45ZSP-S | SRC25ZMX-S | SRC35ZMX-S | SRC50ZSX-S | SRC25ZMX-S |
| Energy class (cooling/heating) | | A/A | A++/A+ | A/A | A++/A+ | A++/A+ | A++/A | A++/A+ |
| SEER | | 5.50 | 6.15 | 5.38 | 7.11 | 6.75 | 6.12 | 6.43 |
| SCOP (Average climate) | | 3.80 | 4.00 | 3.81 | 4.37 | 4.26 | 3.87 | 4.08 |
| Pdesign (cooling/heating(@-10°C)) | kW | 2.50/2.80 | 3.20/3.00 | 4.50/3.80 | 2.50/3.00 | 3.50/3.30 | 5.00/4.80 | 2.50/3.30 |
| Annual electricity consumption (cooling/heating) | kWh/a | 160/1033 | 183/1052 | 293/1398 | 123/961 | 182/1085 | 286/1736 | 136/1133 |
| Designated heating season | | Average | | | | | | |

| Indoor unit | | SRR35ZM-S | FDTC25VF | FDTC35VF | FDTC40VF | FDTC50VF | FDTC60VF |
|---|---|---|---|---|---|---|---|
| Outdoor unit | | SRC35ZMX-S | SRC25ZMX-S | SRC35ZMX-S | SRC40ZSX-S | SRC50ZSX-S | SRC60ZSX-S |
| Energy class (cooling/heating) | | A++/A+ | A++/A+ | A++/A+ | A++/A | A+/A | A+/A |
| SEER | | 6.33 | 6.10 | 6.12 | 6.53 | 6.01 | 5.76 |
| SCOP (Average climate) | | 4.02 | 4.13 | 4.15 | 3.96 | 3.85 | 3.80 |
| Pdesign (cooling/heating(@-10°C)) | kW | 3.50/3.55 | 2.55/3.10 | 3.60/3.60 | 4.00/4.00 | 5.00/4.80 | 5.60/5.90 |
| Annual electricity consumption (cooling/heating) | kWh/a | 194/1238 | 147/1050 | 207/1215 | 215/1416 | 291/1745 | 341/2172 |
| Designated heating season | | Average | | | | | |

## Multi-split System

| Indoor unit | | SRK20ZSX-W x 2 | SRK20ZSX-W SRK25ZSX-W | SRK20ZSX-W x 3 | | SRK20ZSX-W x 4 | | SRK20ZS-W x 5 |
|---|---|---|---|---|---|---|---|---|
| Outdoor unit | | SCM40ZS-W | SCM45ZS-W | SCM50ZS-W | SCM60ZS-W | SCM71ZS-W | SCM80ZS-W | SCM100ZS-W |
| Energy class (cooling/heating) | | A+++/A++ | A+++/A++ | A+++/A++ | A+++/A++ | A++/A++ | A++/A++ | A+++/A+ |
| SEER | | 9.10 | 9.10 | 8.80 | 8.80 | 8.30 | 8.20 | 8.60 |
| SCOP (Average climate) | | 4.70 | 4.70 | 4.60 | 4.60 | 4.60 | 4.60 | 4.50 |
| Pdesign (cooling/heating(@-10°C)) | kW | 4.00/4.10 | 4.50/4.10 | 5.00/4.70 | 6.00/4.70 | 7.10/6.70 | 8.00/6.70 | 10.00/6.80 |
| Annual electricity consumption (cooling/heating) | kWh/a | 154/1222 | 174/1222 | 199/1430 | 239/1430 | 300/2038 | 342/2038 | 407/2116 |
| Designated heating season | | Average | | | | | | |

| Indoor unit | | SRK20ZSX-W x 2 | SRK20ZSX-W SRK25ZSX-W | SRK20ZSX-W x 3 | | SRK20ZSX-W x 4 | | SRK20ZSX-W x 5 | SRK25ZS-W+ SRK35ZS-W x 3 |
|---|---|---|---|---|---|---|---|---|---|
| Outdoor unit | | SCM40ZS-S | SCM45ZS-S | SCM50ZS-S1 | SCM60ZM-S1 | SCM71ZM-S1 | SCM80ZM-S1 | SCM100ZM-S | SCM125ZM-S* |
| Energy class (cooling/heating) | | A++/A+ | A++/A+ | A++/A+ | A++/A+ | A++ /A+ | A++/A+ | A/A+ | - |
| SEER | | 6.31 | 6.43 | 6.80 | 6.80 | 7.20 | 7.10 | 5.10 | 5.61 |
| SCOP (Average climate) | | 4.05 | 4.11 | 4.40 | 4.20 | 4.20 | 4.20 | 4.02 | 4.11 |
| Pdesign (cooling/heating(@-10°C)) | kW | 4.00/3.30 | 4.50/4.10 | 5.00/4.90 | 6.00/7.30 | 7.10/8.10 | 8.00/8.20 | 10.00/10.10 | - |
| Annual electricity consumption (cooling/heating) | kWh/a | 222/1140 | 245/1396 | 258/1559 | 309/2435 | 346/2700 | 395/2733 | 687/3519 | - |
| Designated heating season | | Average | | | | | | | |

## Before starting use

### Heating performance
The heating performance values (kW) described in the catalogue are the values obtained by operating at an outdoor temperature of 7°C and indoor temperature of 20°C as set forth in the ISO Standards. Heating performance is reduced as the temperature drops. If the outdoor temperature is too low and the heating performance is insufficient, use other heating appliances as well.

### Indication of sound values
The sound values are the values (A scale) measured in a chamber such as an anechoic chamber following the ISO Standards. In the actual installation state, the value is normally larger than the values given in the catalogue due to the effect of surrounding noise and echo. Take this into consideration when installing.

### Use in oil atmosphere
Avoid installing this unit in an atmosphere where oil scatters or builds up, such as in a kitchen or machine factory.
If the oil adheres to the heat exchanger, the heat exchanging performance will drop, mist may be generated, and the synthetic resin parts may deform and break.

### Use in acidic or alkaline atmosphere
If this unit is used in acidic atmosphere such as hot spring areas having high level of sulfuric gases or in alkaline atmosphere including ammonia or calcium chloride, places where the exhaust of the heat exchanger is sucked in, or at coastal areas where the unit is subject to salt breezes, the outer plate or heat exchanger, etc., will corrode. Please ask a dealer or specialist when you use an air conditioner in places differing from a general atmosphere.

### Use in places with high ceilings
If the ceiling is high, install a circulator to improve the heat and air flow distribution when heating.

### Refrigerant leakage
The refrigerant (R32, R410A) used for Air conditioner is non-toxic and in its original state.
However, in consideration of a state where the refrigerant leaks into the room, measures against refrigerant leaks must be taken in small rooms where the tolerable level could be exceeded. Take measures by installing ventilation devices, etc.

### Use in snowy areas
Take the following measures when installing the outdoor unit in snowy areas.

- **Snow prevention**
  Install a snow-prevention hood so that the snow does not obstruct the air intake port or enter and freeze in the outdoor unit.
- **Snow piling**
  In areas with heavy snow fall, the piled snow could block the air intake port. In this case, a frame that is 50cm or higher than the estimated snow fall must be installed underneath the outdoor unit.

### Automatic defrosting device
If the temperature is low, and the humidity is high, frost will stick to the heat exchanger of the outdoor unit. If continued to use, the heating performance will drop.
The "Automatic defrosting device" will function to remove this frost.
After heating for approx. three to ten minutes, it will stop, and the frost will be removed. After defrosting, hot air will be blown again.

### Servicing the air conditioner
After the air conditioner is used for several seasons, dirt will build up in the air conditioner causing the performance to drop. In addition to regular servicing, a maintenance contract by a specialist is recommended.

## Safety Precautions

### Air conditioner usage target
The air conditioner described in this catalogue is a dedicated cooling/heating device for human use.
Do not use it for special applications such as the storage of food items, animals or plants, precision devices or valuable art, etc.
This could cause the quality of the items to drop, etc.
Do not use this for cooling vehicles or ships. Water leakage or current leaks could occur.

### Before use
Always read the "User's Manual" thoroughly before starting use.

### Installation
Always commission the installation to a dealer or specialist. Improper installation will lead to water leakage, electric shocks and fires.
Make sure that the outdoor unit is stable in installation. Fix the unit to stable base.

### Usage place
Do not install in places where combustible gas could leak or where there are sparks.
Installation in a place where combustible gas could be generated, flow or accumulate, or places containing carbon fibers could lead to fires.


**Mitsubishi Heavy Industries Thermal Systems, Ltd.**
( Wholly-owned subsidiary of MITSUBISHI HEAVY INDUSTRIES, LTD.)

2-3 Marunouchi 3-chome, Chiyoda-ku, Tokyo 100-8332, Japan
**https://www.mhi-mth.co.jp/en/**


Our factories are ISO9001 and ISO14001 certified.

Certified ISO 9001

Certificate Number : JQA-0709

Certificate:44 100 980813

Certified ISO 14001

Certificate Number : YKA4005636

Certificate:04 104 980813


**22R01E** January 2022 F



Because of our policy of continuous improvement, we reserve the right to make changes in all specifications without notice.



Edited in Japan